The City of Bonney Lake

BID PROPOSAL, CONTRACT DOCUMENTS, AND SPECIFICATIONS FOR:

Grainger Springs
Pump House Replacement

Fall 2023

The City of Bonney Lake Public Services – Infrastructure Development 21719 96th Street E. Bonney Lake, WA 98391 (253) 862-8602 Contact: Ken Gill, PE (253) 447-4336	RH2 Engineering, Inc. 1201 Pacific Avenue Suite 1750 Tacoma, WA 98402 (425) 951-5338 Contact: Clayton Posey, PE (253) 797-7632

The City of Bonney Lake

BID PROPOSAL, CONTRACT DOCUMENTS, AND SPECIFICATIONS FOR:

Grainger Springs
Pump House Replacement

Project No. BON 21.0291

Fall 2023

The information contained in this document was prepared by and under the direct supervision of the undersigned:

Signed: 12/8/2023

Signed: 12/8/2023

Signed: 12/8/2023

Signed: 12/8/2023

THE CONTENT OF THIS DOCUMENT, AS A MEANS OF PROFESSIONAL SERVICE, IS PROTECTED BY 17 U.S.C. § 101. ET SEQ. AS SUCH, IT SHALL NOT BE USED, IN WHOLE OR IN PART, FOR ANY OTHER PROJECT OR PURPOSE WITHOUT WRITTEN AUTHORIZATION FROM THE OWNER OR RH2 ENGINEERING. © 2023 RH2 ENGINEERING, INC.

CITY OF BONNEY LAKE
Grainger Springs Pump House Replacement
TABLE OF CONTENTS

ADVERTISEMENT FOR BIDS

INSTRUCTIONS TO BIDDERS

01. GENERAL IB-1
02. LOCATION IB-1
03. EXAMINATION OF THE PLANS, SPECIFICATIONS, AND SITE IB-1
04. PROPOSALS IB-2
05. BID PROPOSAL DEPOSIT IB-2
06. REVIEW OF PROPOSALS IB-2
07. BIDDER RESPONSIBILITY AND DISQUALIFICATION OF BIDDERS IB-3
08. AWARD OF CONTRACT IB-4
09. FAILURE TO EXECUTE CONTRACT IB-4
10. CORRECTIONS, INTERPRETATIONS, AND ADDENDA IB-4
11. PROJECT ENGINEER IB-4
12. CHEMICAL HAZARD COMMUNICATION IB-5
13. COMPLETION TIME IB-5
14. SUPPLEMENTING OR REVISING PROPOSALS IB-5
15. IRREGULAR PROPOSALS IB-5
16. TIED BIDS IB-5
17. BIDDER’S CHECKLIST IB-6
18. BUSINESS LICENSE IB-6

BID FORMS

NON-COLLUSION CERTIFICATE BD-1
SUBCONTRACTOR LIST BD-3
BIDDER'S QUALIFICATION CERTIFICATE BD-5
BID BOND FORM BD-7
PROPOSAL BD-9
SCHEDULE OF PRICES BD-11
CERTIFICATION OF COMPLIANCE WITH WAGE PAYMENT STATUTES BD-15

CONTRACT FORMS

CONTRACT CD-1
PERFORMANCE AND GUARANTY BOND CD-3
LABOR AND MATERIAL PAYMENT BOND CD-5
CERTIFICATE OF INSURANCE CD-7
CERTIFICATE AS TO CORPORATE PRINCIPAL CD-9
CERTIFICATE AS TO CORPORATE SEAL CD-11
CONTRACTOR’S DECLARATION OF OPTION FOR MANAGEMENT OF STATUTORY RETAINED PERCENTAGE CD-13
REQUEST FOR TAXPAYER ID NUMBER AND CERTIFICATION (W-9) CD-15
WARRANTY AND DEFECT BOND CD-17
CITY BUSINESS LICENSE ADDENDUM CD-19

© RH2 Engineering, Inc., 2023

PREVAILING WAGES

STATEMENT OF INTENT TO PAY PREVAILING WAGES
AFFIDAVIT OF WAGES PAID
REQUEST FOR RELEASE
PREVAILING WAGE RATES FOR PIERCE COUNTY (EFFECTIVE ***JANUARY 10, 2024***)
BENEFIT CODE KEY (EFFECTIVE ***JANUARY 10, 2024***)

GENERAL CONDITIONS

TABLE OF CONTENTS GC-1
A. GENERAL PROVISIONS
1. INTENT OF CONTRACT AND COORDINATION OF CONTRACT DOCUMENTS GC-3
2. DEFINITIONS GC-4
3. ABBREVIATIONS GC-8
4. INSURANCE GC-10
5. INDEMNIFICATION/HOLD HARMLESS GC-12
6. WASHINGTON STATE SALES TAX GC-12
7. INDEPENDENT CONTRACTOR RELATIONSHIP GC-12
8. COMPLIANCE WITH LAWS GC-13
B. BIDDING AND AWARD OF CONTRACT
9. BIDDER QUALIFICATIONS – PREVIOUS EXPERIENCE GC-13
10. EXAMINATION OF SITE WORK – DIFFERING SITE CONDITIONS GC-14
11. PLANS AND SPECIFICATIONS – OMISSIONS AND DISCREPANCIES GC-14
12. PRE-CONSTRUCTION CONFERENCE GC-15
13. COMMENCEMENT AND PROSECUTION OF WORK GC-15
C. SCOPE AND RESPONSIBILITY FOR WORK
14. STATUS OF ENGINEER GC-16
15. INSPECTIONS AND TESTS GC-17
16. TIME FOR COMPLETION GC-18
17. PROGRESS SCHEDULE GC-18
18. ALTERNATE DESIGNS GC-19
19. SHOP DRAWINGS GC-20
20. OWNERSHIP OF DRAWINGS GC-20
21. SURVEYS, PERMITS, POINTS, AND INSTRUCTIONS GC-20
22. RECORDS RETENTION GC-21
23. FINAL INSPECTION AND ACCEPTANCE GC-21
24. ASSIGNMENT AND SUBCONTRACTING GC-22
25. WORK ON CITY STREETS GC-23
26. EXISTING UTILITIES OR OBSTRUCTIONS GC-23
27. REPLACING IMPROVEMENTS GC-25
28. TRAFFIC MAINTENANCE AND PROTECTION GC-25
29. SEPARATE CONTRACT – INTERFERENCE WITH OTHER CONTRACTORS GC-26
30. CLEAN-UP GC-26
D. MATERIALS AND EQUIPMENT
31. MATERIALS AND EQUIPMENT USED IN WORK GC-27
32. MATERIALS AND EQUIPMENT INCORPORATED INTO WORK GC-27
33. MATERIALS AND EQUIPMENT FURNISHED BY CITY GC-27
34. CUTTING AND FITTING GC-28
35. DETERMINATION OF “OR EQUAL” GC-28
36. ROYALTIES AND PATENTS GC-28

© RH2 Engineering, Inc., 2023

E. WORKERS
37. WORKERS AND SUPERVISION GC-29
38. PAYMENT OF PREVAILING WAGES GC-29
39. WORKER BENEFITS GC-31
F. PAYMENT
40. APPLICATION FOR PAYMENT GC-32
41. SCHEDULE FOR VALUES OF LUMP SUM WORK GC-32
42. PAYMENTS WITHHELD GC-33
G. FORCE ACCOUNT GC-33
H. CHANGES AND DISPUTES
43. CHANGES IN THE WORK GC-37
44. MINOR CHANGES GC-39
45. VARIATION IN ESTIMATED QUANTITIES GC-39
46. EQUITABLE ADJUSTMENTS GC-41
47. PROTESTS GC-42
48. DISPUTES GC-43
49. DELAYS AND EXTENSION OF TIME GC-45
50. UNAUTHORIZED OR DEFECTIVE WORK GC-46
51. DEFECT ARISING IN ONE YEAR AND REMEDIES GC-47
52. SUSPENSION OF WORK GC-47
53. TERMINATION OF CONTRACT GC-48
54. LIQUIDATED DAMAGES GC-50
55. UNILATERAL ACCEPTANCE GC-51
56. JURISDICTION, VENUE, AND TIME LIMITATION FOR CLAIMS GC-52

SPECIAL PROVISIONS

DIVISION 1 GENERAL 1-1
1.10 GENERAL 1-1
1.11.02 Reuse of Documents 1-1
1.11.03 Electronic Data 1-1
1.14 Work Restrictions 1-2
1.14.19 Use of Site 1-2
1.14.22 Cold Weather Work 1-2
1.20 PRICE AND PAYMENT PROCEDURES 1-2
1.21.55 Cost Increases for Materials 1-2
1.25.00 Substitution Procedures 1-2
1.25.13.10 Substitutions Prior to Bid Opening 1-3
1.25.13.15 Substitutions After Contract Execution 1-3
1.30 ADMINISTRATIVE 1-4
1.31 Project Management and Coordination 1-4
1.31.01 Contractor's Responsibility 1-4
1.31.19 Progress Meetings 1-5
1.32.13 Scheduling of Work 1-5
1.32.16 Construction Progress Schedule 1-5
1.32.29 Periodic Work Observation 1-5
1.33 Submittals 1-5
1.33.23 Shop Drawings, Product Data, and Samples 1-6
1.40 QUALITY REQUIREMENTS 1-7
1.42.19 Reference Standards 1-7
1.43.20 Warranty 1-8
1.45.16 Field Quality Control Procedures 1-9
1.50 TEMPORARY FACILITIES AND CONTROLS 1-9
1.51 Temporary Utilities 1-9
1.52.00 Construction Facilities 1-10

© RH2 Engineering, Inc., 2023

1.52.20 Locks and Keys 1-10
1.54 Construction Aids 1-11
1.60 PRODUCT REQUIREMENTS 1-11
1.61 Common Product Requirements 1-11
1.61.31 Integrated (or Package) Products 1-11
1.70 EXECUTION AND CLOSEOUT REQUIREMENTS 1-12
1.71 Examination and Preparation 1-12
1.71.23.16 Construction Surveying 1-12
1.74 Cleaning and Waste Management 1-12
1.74.23 Final Cleaning 1-12
1.74.40 Abandonment & Removal of Terminated Water Facilities 1-13
1.75 Starting and Adjusting 1-13
1.75.16 Startup Procedures 1-13
1.75.16.10 Startup 1-14
1.75.16.12 Startup and Testing Coordination 1-14
1.75.16.20 Testing 1-15
1.75.16.22 Scheduling of Owner Review for Testing 1-16
1.75.16.32 Pump Testing 1-17
1.75.16.35 Treatment System Testing 1-17
1.75.16.40 Electrical and Control Systems Testing 1-18
1.75.16.50 Concrete Clear Well Disinfection 1-18
1.75.16.51 Clear Well Leakage Warranty 1-19
1.75.16.52 Concrete Clear Well Leakage Test 1-20
1.75.16.56 Clear Well Soak Test 1-20
1.75.35 Operational Demonstration 1-21
1.78 Closeout Submittals 1-22
1.78.23 Operation and Maintenance Data 1-22
1.78.39 Project Record Documents 1-23
1.79 Demonstration and Training 1-24
1.79.10 Training 1-24
1.80 PERFORMANCE REQUIREMENTS 1-24
1.81 Facility Performance Requirements 1-24
1.81.30 Seismic Restraint and Anchorage 1-24
1.81.40 Pressure Ratings 1-25
1.81.45 Location Designations 1-25
1.81.50 Materials in Contact with Domestic Water 1-26
DIVISION 2 SITEWORK 2-1
2.00 GENERAL 2-1
2.05 Common Work for Exterior Improvements 2-1
2.07 Geotechnical Investigations 2-2
2.08 Special Inspections for Earth Work 2-2
2.10 SITE PREPARATION 2-3
2.10.2 Clearing and Grubbing 2-3
2.10.3 Springs Protection 2-3
2.10.4 Dewatering 2-4
2.10.5 Temporary Access Roads 2-5
2.11 Earthwork Materials 2-6
2.11.1 Common Work for Earthwork Materials 2-6
2.11.2 General Fill 2-7
2.11.3 Structural Fill 2-7
2.11.4 Pipe Bedding 2-8
2.11.5 Trench Backfill 2-9
2.11.6 Gravel Backfill for Drains 2-10
2.11.7 Gravel Base Course 2-10
2.11.8 Gravel Top Course 2-10

© RH2 Engineering, Inc., 2023

2.11.11 Pea Gravel 2-11
2.11.20 Geotextile Fabric 2-11
2.12 Road Surfacing 2-12
2.12.2 Cement Concrete Pavement 2-12
2.12.3 Hot Mix Asphalt (HMA) 2-12
2.13.3 Selective Tree and Shrub Removal 2-13
2.20 EARTH MOVING 2-13
2.23 Excavation 2-13
2.25 Temporary Erosion and Sedimentation Control 2-14
2.25.2 Contractor Provided Certified Erosion and Sedimentation Control Lead 2-14
2.25.3 Temporary Erosion and Sedimentation Control 2-14
2.25.4 Temporary Storm Water Pollution Control 2-15
2.25.5 Filter Fabric Fence 2-16
2.30 SITE IMPROVEMENTS 2-16
2.31 Fencing and Gates 2-16
2.31.1 Common Work for Fencing 2-17
2.31.3 Chainlink Fence 2-17
2.40 DEMOLITION AND STRUCTURE MOVING 2-20
2.41.16 Structure Demolition 2-20
2.50 EXCAVATION SUPPORT AND PROTECTION 2-22
2.51 Contractor Designed Shoring 2-22
2.60 CONTAMINATED & WASTE MATERIALS HANDLING 2-23
2.60.2 Waste Material Control 2-23
2.61 Contaminated Materials 2-24
2.61.2 Toxic Spill or Release Contact Requirements 2-24
2.61.3 Hazardous Lead Materials 2-24
2.61.26 Hazardous Asbestos Materials 2-25
2.90 LANDSCAPING 2-26
2.90.1 Common Work for Landscaping 2-26
2.90.2 Landscape Grading 2-26
2.90.3 Soil Amendments 2-27
2.90.3.4 Mulch and Amendments - Post-Construction Soil Quality and Depth 2-27
2.90.10 Topsoil 2-29
2.90.11 Hydroseed 2-30
2.90.21 Erosion Control Matting 2-32
2.92.30 Weed Control 2-32
DIVISION 3 CONCRETE 3-1
3.00 GENERAL 3-1
3.05 Common Work for Concrete 3-1
3.06 Maintenance of Concrete 3-3
3.06.30.71 Resurfacing of Cast-in-Place Concrete 3-4
3.10 FORMING AND ACCESSORIES 3-5
3.11 Formwork 3-5
3.11.13 Structural Cast in Place Forming 3-5
3.15 Concrete Accessories 3-6
3.15.13 Non-Expanding Waterstops 3-6
3.15.14 Expanding Waterstops 3-7
3.15.02 Premolded Joint Filler 3-8
3.15.03 Expansion Joints 3-8
3.15.05 Pipe Penetrations through Concrete 3-9
3.15.19 Concrete Anchors 3-9
3.20 REINFORCING 3-10
3.21 Reinforcement Bars 3-10
3.21.11 Plain Steel Reinforcement Bars 3-10
3.22.13 Galvanized Welded Wire Fabric Reinforcement 3-12

© RH2 Engineering, Inc., 2023

3.30 CAST-IN-PLACE CONCRETE 3-13
3.30.05 Common Work for Cast in Place Concrete 3-13
3.31 Structural Concrete 3-15
3.31.30 Thrust Blocks, Driveways, Curb, Gutter, Sidewalks, Equipment Pads, and Fence Posts 3-16
3.31.32 Hydraulic Concrete 3-16
3.34 Low Density Concrete 3-17
3.34.16 Concrete Fill 3-17
3.35 Concrete Finishing 3-17
3.35.05 Common Work for Surface Finishing 3-18
3.35.50 Ordinary Wall Finish 3-18
3.35.54 Floated Finish 3-19
3.35.56 Light Brush Finish 3-19
3.35.58 Sacked Wall Finish 3-19
3.39 Concrete Curing 3-20
3.40 PRE-CAST CONCRETE 3-20
3.48 Pre-Cast Concrete Specialties 3-20
3.48.50 Utility Structures 3-21
3.48.52 Precast Gravity or Thrust Blocks 3-22
3.60 GROUTING 3-22
3.62 Non-Shrink Grouting 3-22
3.62.13 Non-Metallic Non-Shrink Grout 3-22
3.64 Injection Grouting 3-24
3.64.23 Epoxy Injection Grouting 3-25
DIVISION 4 MASONRY 4-1
4.00 GENERAL 4-1
4.05 Common Work for Masonry 4-1
4.20 UNIT MASONRY 4-1
4.22 Concrete Unit Masonry 4-1
DIVISION 5 METALS 5-1
5.00 GENERAL 5-1
5.05 Common Work for Metals 5-1
5.05.23 Bolts and Other Connectors For Structural Elements 5-4
5.50 METAL FABRICATIONS 5-5
5.51 Metal Stairs 5-6
5.51.05 Common Work for Stairs and Ladders 5-6
DIVISION 6 WOOD, PLASTICS, AND COMPOSITES 6-1
6.00 GENERAL 6-1
6.05 Common Work for Wood, Plastics, and Composites 6-1
6.10 ROUGH CARPENTRY 6-1
6.11 Wood Framing 6-1
6.12 Wood Structural Panels 6-3
6.20 FINISH CARPENTRY 6-3
6.20.05 Common Work for Finish Carpentry 6-3
6.22 Millwork 6-4
6.22.13 Standard Pattern Wood Trim 6-4
DIVISION 7 THERMAL AND MOISTURE PROTECTION 7-1
7.00 GENERAL 7-1
7.05 Common Work for Thermal and Moisture Protection 7-1
7.10 DAMPPROOFING AND WATERPROOFING 7-2
7.13 Sheet Waterproofing 7-2
7.13.30 Geocomposite Foundation Drainage 7-2
7.20 THERMAL PROTECTION 7-6
7.21 Thermal Insulation 7-6
7.21.16 Blanket Insulation 7-6
7.21.13.13 Foam Board Insulation 7-7

© RH2 Engineering, Inc., 2023

7.21.30 CMU Wall Insulation 7-7
7.24 Exterior Insulation and Finish Systems 7-8
7.24.32 Exposed Small Piping Insulation 7-8
7.24.34 Exposed Large Piping Insulation 7-8
7.26.30 Roof Vapor Retarders 7-9
7.27 Air Barrier 7-9
7.40 ROOFING AND SIDING PANELS 7-10
7.42.93 Soffit Panels 7-10
7.60 FLASHING AND SHEET METAL 7-10
7.61 Sheet Metal Roofing 7-10
7.61.05 Common Work for Metal Roofing 7-11
7.61.13 Standing Seam Sheet Metal Roofing 7-13
7.62 Sheet Metal Flashing and Trim 7-14
7.70 ROOF AND WALL SPECIALTIES 7-14
7.72 Roof Accessories 7-14
7.72.05 Common Work for Roof and Wall Specialties 7-14
7.90 JOINT PROTECTION 7-15
7.92.13 Elastomeric Joint Sealants 7-15
DIVISION 8 OPENINGS 8-1
8.00 GENERAL 8-1
8.05 Common Work for Openings 8-1
8.06 Schedules for Openings 8-1
8.10 DOORS AND FRAMES 8-1
8.10.05 Common Work for Doors and Frames 8-1
8.11 Metal Doors and Frames 8-4
8.11.13 Hollow Metal Doors and Frames 8-4
8.30 SPECIALTY DOORS 8-4
8.31 Access Doors and Panels 8-4
8.31.20 Vault Hatches 8-4
8.31.24 Building Roof Hatch 8-6
8.33 Coiling Doors and Grilles 8-6
8.70 HARDWARE 8-6
8.71 Door Hardware 8-6
8.71.05 Common Work for Door Hardware 8-6
8.71.20 Hardware for Man-Doors 8-7
8.90 LOUVERS AND VENTS 8-9
8.90.05 Common Work for Louvers and Vents 8-9
8.91 Louvers 8-10
8.91.13 Motorized Wall Louvers 8-10
8.91.19 Fixed Louver 8-10
DIVISION 9 FINISHES 9-1
9.00 GENERAL 9-1
9.20 PLASTER AND GYPSUM BOARD 9-1
9.21.23 Gypsum Board for Low Occupancy Areas 9-1
9.90 PAINTING AND COATING 9-2
9.90.05 Common Work for Painting and Coating 9-2
9.90.06 Product and Color Schedule 9-6
9.90.13 Unpainted Items 9-7
9.91.13 Exterior or Damp Environment Painting 9-7
9.91.13.01 - System 1: Metals – Exterior and Wet Conditions including Doors, Windows, and Frames 9-7
9.91.13.10 - System 3: Wood – Exterior, Painted 9-8
9.91.13.12 - System 5: Metals - Metal in Contact with Concrete, Masonry or Dissimilar Metals. 9-9
9.91.13.13 - System 6: Ferrous Metal Pipe and Supports including Steel, Cast Iron, and Ductile Iron (Exposed Indoors and Outdoors). 9-9
9.91.23 Interior Painting 9-10

© RH2 Engineering, Inc., 2023

9.91.23.01 – System 7: Metals Interior (Dry Conditions) ... 9-10
9.91.23.03 - System 8: Galvanized Metal Surface Repair ... 9-11
9.91.23.04 – System 9: Galvanized Iron and Non-Ferrous Metal (non-immersion) ... 9-11
9.91.23.10 - System 11: Gypsum Wallboard – Interior, Painted ... 9-12
9.91.23.12 - System 13: Wood – Interior, Painted ... 9-12
9.91.33 Submerged and Buried Metals Painting ... 9-13
9.91.33.01 - System 14: Metals in Contact with Drinking Water (Steel pipe, pump discharge head interior). 9-13
9.91.33.05 - System 17: Buried or Submerged Ferrous Pipe ... 9-14
9.97.23 Concrete and Masonry Coatings ... 9-16
9.97.23.05 – System 22: Concrete (Exterior below Grade Water-proofing) for clear well ... 9-16
9.97.23.08 – System 25: Concrete Vault Exterior – Bottom and Walls ... 9-17
9.97.23.11 System 27A: Anti-Graffiti Coating and Water Repellent on CMU and Concrete Exterior ... 9-17
9.99.33 Specialty Metal Coatings ... 9-18
9.99.33.07 – System 29: Vertical turbine pump bowls, pump impellor casing interior (Submerged, Potable Water) ... 9-18
9.99.33.10 – System 32: Steel Pipe Field Repairs (Potable and Non-Potable Water) ... 9-19
DIVISION 10 SPECIALTIES ... 10-1
10.00 GENERAL ... 10-1
10.05 Common Work for Specialties ... 10-1
10.06.10 Schedules for Signage ... 10-1
10.10 INFORMATION SPECIALTIES ... 10-2
10.14.23 Panel Signage ... 10-2
10.40 SAFETY SPECIALTIES ... 10-3
10.43.16 First Aid Kit ... 10-3
10.43.18 Ear Plug Dispenser ... 10-4
10.44.16 Fire Extinguisher ... 10-4
DIVISION 11 EQUIPMENT ... 11-1
11.00 GENERAL ... 11-1
11.05 Common Work for Equipment ... 11-1
11.10 PUMPS ... 11-1
11.10.05 Common Work for Pumps ... 11-1
11.11.2 Vertical Turbine Pumps ... 11-11
11.19 Pump Anchor Bolts ... 11-14
11.20 PUMP MOTORS ... 11-14
11.20.01 Common Work for Pump Motors ... 11-14
11.21 Non-Submerged Pump Motors ... 11-21
11.60 TREATMENT EQUIPMENT ... 11-21
11.64.73 Storage Tanks ... 11-21
11.90 OTHER EQUIPMENT ... 11-29
11.95 Heating, Ventilating, and Air-Conditioning ... 11-29
11.95.05 Common Work for HVAC ... 11-29
11.95.34 HVAC Fans ... 11-29
11.95.34.1 Wall Ventilators ... 11-29
11.95.80 Decentralized HVAC Equipment ... 11-30
11.95.81.26 Ductless Mini-Split System Air Conditioner ... 11-30
DIVISION 15 MECHANICAL ... 15-1
15.00 GENERAL ... 15-1
15.05 Common Work for Mechanical ... 15-1
15.10 BURIED PIPE INSTALLATION ... 15-3
15.11 Open Trench Pipe Installation ... 15-4
15.11.11 Pressure Pipe Installation ... 15-4
15.11.41 Storm Drain Installation ... 15-6
15.11.50 Trench Patching ... 15-6
15.13 Above Grade Mechanical Installation ... 15-6
15.13.02 Exposed Piping Installation ... 15-6

© RH2 Engineering, Inc., 2023

15.18 Buried Piping Inspection and Testing 15-8
15.18.02 Buried Pressure Pipe Inspection and Testing 15-8
15.18.03 Valve Testing 15-9
15.20 PIPE AND FITTINGS 15-10
15.21 Common Work for Pipe and Fittings 15-10
15.21.02 Shackle (Threaded Rod) Restraints 15-11
15.22 Metal Pipe and Fittings 15-13
15.22.02 Ductile Iron Pipe and Fittings 15-13
15.22.03 Steel Pipe and Fittings 15-14
15.22.04 Stainless Steel Pipe and Fittings 15-20
15.22.05 Galvanized Steel Pipe 15-21
15.22.06 Copper Pipe and Fittings 15-21
15.22.08 Brass/Bronze Pipe and Fittings 15-22
15.22.09 True Restrained Joint Pipe and Fittings 15-22
15.23 Non-Metal Pipe and Fittings 15-24
15.23.05 PVC Pipe and Fittings – Solvent Weld 15-24
15.23.11 Underdrain Pipe 15-24
15.23.12 PVC Pipe for Drain, Waste, and Vent (DWV) 15-25
15.30 VALVES 15-25
15.31 Common Work for Valves 15-25
15.32 Isolation Valves 15-26
15.32.02 Resilient Wedge (Seat) Gate Valves 15-26
15.32.07 Gate Valves – Small Diameter 15-27
15.33 Check Valves 15-27
15.33.02 Swing Check Valves 15-27
15.33.09 Duckbill Elastomeric Check Valves 15-28
15.34 Pilot-Operated Control Valves 15-30
15.34.01 Common Work for Pilot-Operated Control Valves 15-30
15.34.32 Surge Anticipator Valve – Pilot-Operated Control 15-31
15.35 Air Valves 15-31
15.35.02 Air Valves – Clean Water 15-32
15.35.02.03 Air Release Valve for Vertical Turbine Pumps – Clean Water 15-32
15.40 PIPING SPECIALTIES 15-32
15.40.01 Dismantling Joint 15-32
15.40.02 Expansion Joint 15-33
15.40.03 Pipe, Valve, and Conduit Supports 15-33
15.40.04 Dielectric Fittings and Adapters 15-36
15.40.08 Valve Box – Cast Iron 15-37
15.50 FLOW METERS 15-38
15.50.05 Common Work for Flow Meters 15-38
15.51 Flow Meter Readout Head 15-38
15.51.05 Digital Read Head with Electronic Output 15-38
15.53.03 Electromagnetic Flow Meters 15-39
15.60 PRESSURE MEASUREMENT 15-39
15.60.01 Common Work for Pressure Measurement 15-39
15.61 Pressure Gauges 15-40
15.70 PLUMBING 15-41
15.70.05 Common Work for Plumbing 15-41
15.73 Sewer Fixtures 15-43
15.73.02 Building Floor Drains 15-43
15.75 Plumbing Fixtures 15-43
15.75.02 Backflow Prevention Assemblies (2-inch and Smaller) 15-43
15.75.10 Spring Type Check Valves 15-44
15.75.11 True Union Ball Check Valves 15-45
15.75.12 PVC True Union Ball Valves 15-45

© RH2 Engineering, Inc., 2023

15.75.13 Electronic Solenoid Valves 15-45
15.75.14 Needle Valves 15-46
15.75.16 Brass Ball Valves 15-46
15.75.20 Y-Strainers 15-46
15.75.21 Unions 15-47
15.75.22 Quick Disconnect Fittings 15-47
15.75.38 Hose Bibs 15-47
15.75.39 Faucet 15-48
15.75.40 Polyethylene Tubing and Fittings 15-48
15.75.41 Water Hose, Nozzle, and Rack 15-48
15.75.51 Water Hammer Arresters 15-49
15.80 WATER TREATMENT PROCESS PIPING 15-49
DIVISION 16 ELECTRICAL 16-1
16.00 GENERAL 16-1
16.05 Common Work for Electrical 16-1
16.10 ELECTRICAL SITE WORK 16-7
16.10.1 Common Work for Electrical Site Work 16-7
16.10.2 Underground Marking Tape (Detectable Type) 16-8
16.10.3 Handholes and Pull Boxes 16-9
16.15 Grounding and Bonding for Electrical Systems 16-9
16.20 UTILITY SERVICE 16-11
16.21 Electrical Service 16-11
16.21.2 Electrical Utility Meter Enclosure 16-13
16.30 BASIC PANEL EQUIPMENT AND DEVICES 16-13
16.31 Operating and Indicating Devices 16-13
16.31.2 Run Time Meters 16-13
16.31.3 Start Count Meters 16-13
16.31.4 Indicating Lights 16-14
16.31.5 Selector Switch 16-14
16.31.6 Pushbuttons 16-15
16.32 Panel Relays 16-15
16.32.1 Control Relays 16-16
16.32.3 Time Delay Relays 16-16
16.35 Control Panel Accessories 16-17
16.35.1 Terminal Blocks 16-17
16.35.2 Nameplates 16-17
16.36.1 Surge Protection Device (SPD) 16-18
16.40 LOW VOLTAGE MOTOR CONTROL EQUIPMENT 16-18
16.45 Variable Frequency Drive 16-19
16.50 PANELBOARDS 16-35
16.52 Panelboards 16-35
16.55 Switches and Protective Devices 16-39
16.55.1 Common Work for Switches and Protective Devices 16-39
16.55.13 Fuses 16-39
16.55.16 Molded Case Circuit Breakers 16-40
16.55.18 Disconnect Switches 16-40
16.60 CONDUCTORS 16-41
16.61 Low Voltage Wire and Cable 16-41
16.63 Signal Cable 16-43
16.70 RACEWAYS, BOXES, AND FITTINGS 16-44
16.71 Raceways 16-44
16.72 Boxes and Enclosures 16-49
16.72.2 Outlet and Junction Boxes 16-49
16.72.3 Watertight Enclosures 16-50
16.75 Wiring Devices 16-50

© RH2 Engineering, Inc., 2023

16.75.1 Common Work for Wiring Devices 16-50
16.75.2 Receptacles 16-51
16.75.3 Line Voltage Switches 16-52
16.75.4 HOA (Hand-Off-Auto) Lighting Switches 16-52
16.75.5 Plates 16-52
16.85 Lighting 16-53
16.85.1 Common Work for Lighting Fixtures 16-53
16.85.2 Lamps 16-53
16.85.3 Fixtures 16-54
16.85.4 Ballast 16-54
16.95 Testing 16-54
16.95.1 Common Work for Testing 16-55
16.95.3 Conductor Test Report 16-57
16.95.4 Ground Electrode Resistance Test Report 16-58
DIVISION 17 AUTOMATIC CONTROL 17-1
17.00 GENERAL 17-1
17.05 Common Work for Automatic Control 17-1
17.06 Control System Integrator 17-7
17.07 Control System Programmer (Control System Programmer Contracted Directly by Owner) 17-10
17.08 System Description 17-10
17.10 PANELS 17-12
17.12 Equipment Panels 17-12
17.20 PANEL COMPONENTS 17-13
17.20.3 Terminal Blocks 17-13
17.22 Wire and Cable 17-14
17.22.2 Wiring 17-14
17.22.3 Cables 17-14
17.24 Switches and Relays 17-14
17.24.2 Selector Switch 17-15
17.24.4 Panel Relays 17-15
17.25 Indicating Lights and Readouts 17-16
17.25.2 Pilot Lights 17-17
17.30 INTELLIGENT CONTROL UNITS 17-17
17.31.2 Programmable Logic Controller (PLC) System 17-17
17.33 Network Equipment and Computers 17-19
17.33.1 Industrial Network Equipment 17-19
17.50 SENSORS AND CONTROLS 17-20
17.50.1 Common Work for Sensors and Controls 17-20
17.51 Emergency Sensors and Controls 17-20
17.51.2 Smoke Detectors 17-20
17.51.4 Intrusion Alarm Switch 17-21
17.51.5 Operator in Trouble (Panic) Alarm Button 17-21
17.52 Pressure and Level Sensors and Controls 17-22
17.52.2 Flood Liquid Level Switches 17-22
17.52.4 Clean Water Level Float Switches 17-22
17.52.5 Pressure Switches 17-23
17.52.10 Gauge Pressure Transmitter 17-24
17.52.14 Radar Level Transmitter 17-25
17.53 Environmental Sensors and Controls 17-26
17.53.2 Wall-Mounted Cooling Thermostat 17-26
17.90 TESTING, STARTUP, AND TRAINING 17-26
17.90.1 Common Work for Testing, Startup, and Training 17-26
17.91 Tests and Inspections 17-27
17.92 Startup 17-30
17.93 Training 17-31

© RH2 Engineering, Inc., 2023

17.94 Documentation 17-32
17.94.2 Operations and Maintenance Manuals 17-32
DIVISION 18 MEASUREMENT AND PAYMENT 18-1
18.0 GENERAL 18-1
Schedule A - Base Bid 18-1
Bid Item 1 – Mobilization, Demobilization, Site Preparation, and Cleanup 18-1
Bid Item 2 – Temporary Erosion and Sedimentation Control 18-1
Bid Item 3 – Excavation Safety and Shoring 18-2
Bid Item 4 – Demolition 18-2
Bid Item 5 – Site Work 18-2
Bid Item 6 – Dewatering 18-3
Bid Item 7 – Site Utilities 18-3
Bid Item 8 – Excavation 18-3
Bid Item 9 – Imported Structural Backfill 18-4
Bid Item 10 – Topsoil 18-4
Bid Item 11 – Structural 18-4
Bid Item 12 – New Pump and Motor (Pump No. 1) 18-4
Bid Item 13 – New Motor and Refurbish and Relocate Existing Pump (Pump No. 2) 18-4
Bid Item 14 – Mechanical 18-5
Bid Item 15 – Electrical 18-5
Bid Item 16 – Telemetry and Automatic Control 18-5
Bid Item 17 – Construction Records and O&M Manuals 18-5
Bid Item 18 – Testing, Startup and Training 18-5
Bid Item 19 – Minor Change 18-5
Schedule B - Additive Bid (Caustic Soda Treatment System Improvements) 18-6
Bid Item B1 – Caustic Soda Treatment System Improvements 18-6

APPENDICES

APPENDIX A – CITY STANDARD DETAILS
APPENDIX B – RECORD DRAWINGS
APPENDIX C – EXISTING PUMP

© RH2 Engineering, Inc., 2023

ADVERTISEMENT FOR BID

City of Bonney Lake
GRAINGER SPRINGS PUMP HOUSE REPLACEMENT
ADVERTISEMENT FOR BIDS

Notice is hereby given that sealed bids will be received by the City of Bonney Lake at the Public Services Department, 21719 96th Street E., Buckley, Washington 98321, until Wednesday, January 10th, 2024, at 10:00 AM, for the ***Grainger Springs Pump House Replacement*** project.

The City of Bonney Lake is requesting bids from qualified contractors for civil, structural, mechanical, and electrical and control system services. The Grainger Springs Pump House Replacement project consists of the construction and installation of a new pump facility including a below grade concrete clear well, concrete masonry unit building, vertical turbine pumps, major and minor mechanical piping and plumbing, heating ventilation and air conditioning, electrical and automatic control equipment, and associated site work and site utilities. The project includes relocation of existing electrical and automatic control equipment and relocation of an existing vertical turbine pump assembly. Additionally, the project includes the demolition of the existing pump house and site restoration.

Bid proposals will be received only by the Assistant City Engineer or Contract Administrator at the Public Services Department, 21719 96th Street E., Buckley, Washington 98321 by Wednesday, January 10th, 2024, at 10:00 AM. At this time, bids will be opened and read publicly. The Contractors shall clearly identify project name on all submitted bid packages. Proposals received after the time fixed for opening will not be considered.

Contract documents including plan drawings, specifications, addenda, and plan holders list for this project will be available for viewing and downloading on-line through Builders Exchange of Washington, Inc. (BXWA) at http://www.bxwa.com. To view the documents on BXWA's website, select the following links: "Posted Projects"; "Public Works"; "City of Bonney Lake"; "Projects Bidding". Bidders are encouraged to "Register as a Bidder" in order to receive automatic e-mail notification of future addenda and be placed on the "Bidders List". Contact the Builders Exchange of Washington at (425) 258-1303 should you require further assistance. Bid documents may also be found on the City's Website at https://www.cobl.us.

A voluntary pre-bid walkthrough of the project site will be conducted on Tuesday, December 19th, 2023, at 10:00 AM. A City representative will meet prospective bidders on-site at 17835 Elhi Rim Rd, Bonney Lake, WA. The project plans show site access information. For questions regarding this project, please contact Ken Gill, Assistant City Engineer, at (253) 447-4336, or gillk@cobl.us. The question deadline will be Friday, January 5th, 2024, at 10:00 AM.

The City of Bonney Lake, in accordance with Title VI of the Civil Rights Act of 1964, 78 Stat. 252, 42 U.S.C. 2000d to 2000d-4 and Title 49, Code of Federal Regulations, Department of Transportation, Subtitle A, Office of the Secretary, Part 21, Nondiscrimination in Federally-assisted programs of the Department of Transportation issued pursuant to such Act, hereby notifies all bidders that it will affirmatively ensure that in any contract entered into pursuant to this advertisement, disadvantaged business enterprises as defined at 49 CFR Part 23 will be afforded full opportunity to submit bids in response to this invitation and will not be discriminated against on the grounds of race, color, national origin, or sex in consideration for an award.

Each bid proposal shall be accompanied by a bid proposal deposit in cash, certified check, cashier's check, postal money order, or surety bond in an amount equal to at least 5 percent of the amount of such bid proposal. Checks shall be made payable to the City of Bonney Lake. Should the successful bidder fail to enter into such contract and furnish satisfactory performance and payment bond within the time stated in the specifications, the bid proposal deposit shall be forfeited to the City of Bonney Lake.

The City of Bonney Lake reserves the right to reject any or all bids and to waive irregularities in the bid or in the bidding.

No bidder may withdraw his proposal after the hours set for the opening thereof, or before award of contract, unless said award is delayed for a period exceeding eighty (80) calendar days.

Engineers Estimate: $2,400,000 to $2,700,000

Published: Bonney Lake Courier Herald: Wednesday, December 13th, 2023, Wednesday, December 20th, 2023, Wednesday, December 27th, 2023, and Wednesday January 3rd, 2024

INSTRUCTIONS TO BIDDERS

01. General

Plans, specifications, and addenda are available for viewing at 21719 96th Street E., Buckley, Washington 98321, and https://www.cobl.us.

Plans, specifications and addenda are also available for viewing and downloading on-line through Builders Exchange of Washington, Inc (BXWA) at http://www.bxwa.com. Contact the Builders Exchange of Washington at 425/258-1303 should you require further assistance. These items may also be found on the City's Website at https://www.cobl.us.

02. Location

The project is located on Elhi Rim Road in Bonney Lake, WA. See Project Location map shown on the plans set.

03. Examination of Plans, Specifications, and Site

The Bidder shall carefully examine the Bid Documents. Submittal of a Bid shall be conclusive evidence that the Bidder has made these examinations and understands all requirements for the performance of the completed Work. The Bidder further warrants, agrees, and acknowledges by submitting a Bid that it:

1. Has taken steps reasonably necessary to ascertain the nature and location of the Work;
2. Has investigated and satisfied itself as to the general and local conditions which can affect the Work or its cost, including acquisition, transportation, and storage of materials; physical conditions at the site; conformation and condition of the ground; character of equipment and facilities needed; and physical hazards;
3. Has satisfied itself as to the character, quality, and quantity of surface and subsurface materials or obstacles to be encountered insofar as this information is reasonably ascertainable from an inspection of the Work site (including material sites) as well as from the Bid Documents and other information made a part of this Contract; and
4. Has satisfied itself as to the adequacy of time allowed for the completion of the physical Work on the Contract.

Any failure of the Bidder to take the actions described and acknowledged in this clause shall not relieve the Bidder from responsibility for estimating properly the difficulty and cost of successfully performing the Work, or from proceeding to successfully perform the Work without additional expense to the City.

The Bidder agrees that the City shall not be liable to it on any claim for additional payment or additional time or any claim whatsoever if the claim directly or indirectly results from the Bidder's failure to investigate and familiarize itself sufficiently with the conditions under which the Contract is to be performed.

© RH2 Engineering, Inc., 2023

The Bidder shall be familiar and comply with all Federal, State, tribal, and local laws, ordinances, and regulations which might affect those engaged in the Work. The City will not consider any plea of misunderstanding or ignorance of such requirements.

Bid prices shall reflect what the Bidder anticipates to be the cost of completing the Work, including methods, materials, labor, and equipment. Except as the Contract may provide, the Bidder shall receive no payment for any costs that exceed those in the Bid prices.

No Claim shall be allowed because of any ambiguity in the Contract if:

1. The Bidder discovers an ambiguity but fails to notify the City; or
2. The Bidder failed to discover a patent ambiguity that would be discovered by a reasonably prudent Contractor in preparing its Bid.

04. Proposals

Proposals shall be made on the forms included herewith and shall be addressed to: Assistant City Engineer or Contract Administrator, City of Bonney Lake, 21719 96th Street E., Buckley, Washington 98321. Proposals shall be in a sealed envelope, plainly labeled "***Grainger Springs Pump House Replacement***" and shall be delivered to the above address to arrive not later than ***10:00 a.m. on Wednesday, January 10th, 2024***.

No proposal may be withdrawn after the time set for the bid opening or before award of contract unless said award is delayed for a period exceeding 80 calendar days.

05. Bid Proposal Deposit

As a guarantee of good faith and as required by law, each bid shall be accompanied by a bid proposal deposit in the form of a certified check, cashier's check, or surety bond, payable to the order of City of Bonney Lake, for an amount not less than 5 percent of the total amount of bid. The deposits of the three low bidders will be retained until a contract has been entered into between the successful bidder and the City and until a performance bond in an amount of 100 percent of the contract price has been filed as required under these contract documents.

The deposits of other bidders will be returned as soon as it is determined that they are not one of the three low bidders.

06. Review of Proposals

After opening and reading Proposals, the City will check them for correctness of extensions of the prices per unit and the total price. If a discrepancy exists between the price per unit and the extended amount of any Bid item, the price per unit will control. The total of extensions, corrected where necessary, will be used by the City for Award purposes and to fix the amount of the Contract Bond.

© RH2 Engineering, Inc., 2023

The right is reserved by the City to waive informalities in the bidding, accept a Proposal of the lowest responsible Bidder, reject any or all Bids, republish the call for Bids, revise or cancel the Work, or require the Work to be done in another way if the best interest of the City is served.

The contract will not be awarded until the City is satisfied that, at a minimum, the successful bidder is reasonably familiar with the class of work contemplated and has the necessary capital, tools and experience to satisfactorily perform the work within the time stated. Completion of the work within the time stated is essential and prior commitments of the bidder, failure to complete other work on time, or reasonable doubt as to whether the bidder would complete the work on time would be cause for the rejection of any bid. The right is reserved by the owner to waive any informalities in the bidding, to reject any or all proposals, to accept any proposal, to re-advertise for new proposals, or to otherwise carry out the work.

07. Bidder Responsibility and Disqualification of Bidders

Before award, the bidder must meet the following bidder responsibility criteria to be considered a responsible bidder. The bidder may be required by the Owner to submit documentation demonstrating compliance with the criteria. The bidder must:

(a) At the time of bid submittal, have a certificate of registration in compliance with chapter 18.27 RCW;

(b) Have a current state unified business identifier number;

(c) If applicable, have industrial insurance coverage for the bidder's employees working in Washington as required in Title 51 RCW; an employment security department number as required in Title 50 RCW; and a state excise tax registration number as required in Title 82 RCW;

(d) Not be disqualified from bidding on any public works contract under RCW 39.06.010 or 39.12.065(3);

(e) If bidding on a public works project subject to the apprenticeship utilization requirements in RCW 39.04.320, not have been found out of compliance by the Washington state apprenticeship and training council for working apprentices out of ratio, without appropriate supervision, or outside their approved work processes as outlined in their standards of apprenticeship under chapter 49.04 RCW for the one-year period immediately preceding the date of the bid solicitation; and

(f) Until December 31, 2013, not have violated RCW 39.04.370 more than one time as determined by the department of labor and industries.

In addition, Bidder may be deemed not responsible and the Proposal rejected if:

© RH2 Engineering, Inc., 2023

1. More than one Proposal is submitted for the same project from a Bidder under the same or different names;
2. Evidence of collusion exists with any other Bidder. Participants in collusion will be restricted from submitting further Bids;
3. An unsatisfactory performance record exists based on past or current Work;
4. There is uncompleted work (City or otherwise) which might hinder or prevent the prompt completion of the Work Bid upon;
5. The Bidder failed to settle bills for labor or materials on past or current contracts;
6. The Bidder has failed to complete a written public contract or has been convicted of a crime arising from a previous public contract;
7. The Bidder is unable, financially or otherwise, to perform the Work;
8. A Bidder is not authorized to do business in the state of Washington; or
9. There are any other reasons deemed proper by the City.

08. Award of Contract

The project will be awarded to the contractor based upon the total amount of the Grand Total, which is the sum of Schedule A (base bid) plus Schedule B (additive bid).

A notice of award will be forwarded by the City to the successful Bidder. The notice of award will be accompanied by the agreement to be signed by the Contractor and returned to the City within twenty (20) days from receipt, along with all the items in the Bidder's Checklist (Item 17 of these Instructions to Bidders).

09. Failure to Execute Contract

In the event the successful bidder fails to execute the contract, including the provision of all required documents, within twenty (20) days after notification of award, bid proposal deposit shall be forfeited to the City as liquidated damages.

10. Corrections, Interpretations, and Addenda

Any prospective Bidder desiring an explanation or interpretation of the Bid Documents, must request the explanation or interpretation in writing soon enough to allow a written reply to reach all prospective Bidders before the submission of their Bids. Oral explanations, interpretations, or instructions given by anyone before the Award of a Contract will not be binding on the City. Any information given a prospective Bidder concerning any of the Bid Documents will be furnished to all prospective Bidders as an Addendum if that information is deemed by the City to be necessary in submitting Bids or if the City concludes that the lack of the information would be prejudicial to other prospective Bidders.

11. Project Engineer

Notices as required in the general conditions shall be mailed to Public Services Department, ATTN: Ken Gill, City of Bonney Lake, 21719 96th Street E, Buckley WA 98321 , (253) 447-4336.

© RH2 Engineering, Inc., 2023

12. Chemical Hazard Communication

Before starting work under this contract, the Contractor is required to supply information to the City on all chemical hazards that the Contractor is bringing into the work place and thereby creating exposure to City employees and agents.

13. Completion Time

The Contractor(s) shall be required to have all work complete, operational and ready for acceptance within three hundred (300) consecutive working days from the respective date of the Notice to Proceed.

14. Supplementing or Revising Proposals

The original physical Bid Proposal may be supplemented or revised and resubmitted as the official Bid Proposal if the City receives it before the time set for receipt of Proposals.

15. Irregular Proposals

1. A Proposal will be considered irregular and may be rejected if:
   a. The authorized Proposal Form furnished by the City is not used or is altered;
   b. The completed Proposal form contains any unauthorized additions, deletions, alternate Bids, or conditions;
   c. The Bid Proposal does not constitute a definite and unqualified offer to meet the material terms of the Bid invitation, or the Bidder adds provisions reserving the right to reject or accept the Award, or enter into the Contract;
   d. A price per unit cannot be determined from the Bid Proposal;
   e. The Proposal form is not properly executed;
   f. The Bidder fails to submit or properly complete a Subcontractor list, if applicable.
   g. The Bidder fails to include any Disadvantaged Business Enterprise documentation that may be required.
   h. The Proposal does not include a unit price for every Bid item;
   i. Any of the unit prices are excessively unbalanced (either above or below the amount of a reasonable Bid) to the potential detriment of the City;
   j. Receipt of Addenda is not acknowledged; or
   k. A member of a joint venture or partnership and the joint venture or partnership submit Proposals for the same project (in such an instance, both Bids may be rejected).

16. Tied Bids

After opening Bids, if two or more lowest responsive Bid totals are exactly equal, two or more slips of paper will be marked as follows: one marked “Winner” and the other(s) marked “unsuccessful.” The slips will be folded to make the marking unseen. The slips will be placed inside a box. One authorized representative of each Bidder shall draw a slip from the box. Bidders shall draw in alphabetic order by the name of the firm as registered with the Washington

© RH2 Engineering, Inc., 2023

State Department of Licensing. The slips shall be unfolded and the firm with the slip marked "Winner" will be determined to be the successful Bidder and eligible for Award of the Contract. Only those Bidders who submitted a Bid total that is exactly equal to the lowest responsive Bid are eligible to draw.

17. Bidders' Checklist

It is the responsibility of each bidder to ascertain if all the documents listed on the attached index are included in their copy of the bid specifications.

If documents are missing, it is the sole responsibility of the bidder to contact the City of Bonney Lake to obtain the missing documents prior to bid opening time.

18. Business License

Prior to issuing a Notice to Proceed to the Contractor, the City shall require the Contractor to obtain and furnish a copy of a business license to do business in the city or county where the work is located. All subcontractors of the Contractor that perform work on the project site shall also obtain and furnish a copy of a business license to do business in the city or county where the work is located.

© RH2 Engineering, Inc., 2023

BIDDER'S CHECKLIST

The Bidder's attention is especially called to the following forms, which must be completed in full as required and submitted collectively as the Bid Proposal package:

- ☐ **Non-Collusion Certificate**
- ☐ **Subcontractor List**
- ☐ **Bidder's Qualification Certificate**
- ☐ **Bid Bond Form and Bid Bond**
- ☐ **Bid Deposit**
- ☐ **Proposal**
- ☐ **Schedule of Prices**
- ☐ **Certification of Compliance with Wage Payment Statutes**

The following forms are to be executed and submitted within 20 calendar days after receiving the Notice To Award of the Contract.

- ☐ **Contract** (This contract to be executed by the successful bidder in duplicate.)
- ☐ **Performance and Guaranty Bond**
- ☐ **Labor and Material Payment Bond**
- ☐ **Certificate of Insurance**
- ☐ **Certificate as to Corporate Principal**
- ☐ **Certificate as to Corporate Seal**
- ☐ **Contractor's Declaration of Option for Management of Statutory Retained Percentage**
- ☐ **W-9 Request for Taxpayer Identification Number and Certification**
- ☐ **Warranty and Defect Bond**
- ☐ **City of Bonney Lake Business License** (Copy of active business license due prior to Notice to Proceed)

© RH2 Engineering, Inc., 2023

BID FORMS

City of Bonney Lake
NON-COLLUSION CERTIFICATE

State of Washington)
) ss.
County of Pierce)

The undersigned, being duly sworn, deposes and says that the person, firm, association, co-partnership or corporation herein named, has not, either directly or indirectly, entered into any agreement, participated in any collusion, or otherwise taken any action in restraint of free competitive bidding in the preparation and submission of a proposal to the City of Bonney Lake for consideration in the award of a contract on the improvement described as follows:

Grainger Springs Pump House Replacement

The Work includes the construction and installation of a new pump facility including a below grade concrete clear well, concrete masonry unit building, vertical turbine pumps, major and minor mechanical piping and plumbing, heating ventilation and air conditioning, electrical and automatic control equipment, and associated site work and site utilities. The project includes relocation of existing electrical and automatic control equipment and relocation of an existing vertical turbine pump assembly. Additionally, the project includes the demolition of the existing pump house and site restoration.

_____
(Name of Firm)

By:_____
(Authorized Signature)

Title:_____

Sworn to before me this _____ day of _____, in the year of _____.

_____
Notary Public

Corporate Seal:

Firm Name: _____

© RH2 Engineering, Inc., 2023

Firm Name: _____

© RH2 Engineering, Inc., 2023

SUBCONTRACTOR LIST

Heating, ventilation, air conditioning, plumbing, electrical, structural steel, rebar

As required by RCW 39.30.060, bids of $1,000,000 or more for any public work contract require each bidder to submit the names of the subcontractors who will be performing the work in areas of heating, ventilation, air conditioning, plumbing (as described in chapter 18.106 RCW), and electrical (as described in chapter 19.28 RCW), and structural steel installation, and rebar installation or to name itself for the work.

If the subcontractors names are not submitted with the bid, or within 1 hour of the bid time (HVAC, plumbing, electrical), or within 48 hours of the bid time (structural steel and rebar), the bid shall be considered nonresponsive and, therefore, void.

Bid Item (s) _____

Subcontractor Name_____

Address _____

Phone No. _____ State Contractor's License No. _____

Bid Item (s) _____

Subcontractor Name_____

Address _____

Phone No. _____ State Contractor's License No. _____

Bid Item (s) _____

Subcontractor Name_____

Address _____

Phone No. _____ State Contractor’s License No. _____

Bid Item (s) _____

Subcontractor Name_____

Address _____

Phone No. _____ State Contractor’s License No. _____

Bid Item (s) _____

Subcontractor Name_____

Address _____

Phone No. _____ State Contractor’s License No. _____

Firm Name: _____

© RH2 Engineering, Inc., 2023

Firm Name: _____

© RH2 Engineering, Inc., 2023

BIDDER'S QUALIFICATION CERTIFICATE

The undersigned hereby certifies and submits the following qualifications:

1. Name and Address

_____

_____

_____

2A. State of Washington Tax Registration Number (UBI) _____

2B. State of Washington Registration Number and expiration (EIN)_____

3. Number of years in contracting business under present firm name _____

4. Particular types of construction work performed by your company:

_____

_____

_____

_____

5. List most recent construction projects performed:

Amount	**Type**	**Owner**	**Name**	**Phone**

6. Gross amount of contracts now in hand:

_____

7. Bank reference(s):

_____

_____

_____

By (Authorized Signature): _____

Title: _____

Firm Name: _____

© RH2 Engineering, Inc., 2023

Firm Name: _____

© RH2 Engineering, Inc., 2023

BID BOND FORM

Herewith find deposit in the form of a certified check, cashier's check, or cash in the amount of $_____which amount is not less than five percent (5%) of the total bid.

Sign Here: _____

BID BOND

Know all men by these presents, that we _____ as Principal and _____ as Surety, are held and firmly bound unto City of Bonney Lake Washington, as obligee in the penal sum of _____ dollars, for the payment of which the principal and the surety binds themselves, their heirs, executors, administrators, successors and assigns, jointly and severally, by these presents.

The condition of the obligation is such that if the obligee shall make any award to the principal for _____, according to the terms of the proposal or bid made by the principal therefore, and the principal shall duly make and enter into a contract with the obligee in accordance with the terms of said proposal or bid award and shall give bond for faithful performance thereof, with surety or sureties approved by the obligee; or if the principal shall, in case of failure to do so, pay and forfeit to the obligee the penal amount of the deposit specified in the call for bids, then this obligation shall be null and void; otherwise it shall be and remain in full force and effect and the surety shall forthwith pay and forfeit to the obligee, as penalty and liquidated damages the amount of this bond.

Signed, sealed and dated this _____ day of _____, in the year of _____.

Principal_____

Surety_____

Return of deposit in the amount of $_____

Date_____

By_____

Firm Name: _____

© RH2 Engineering, Inc., 2023

Firm Name: _____

© RH2 Engineering, Inc., 2023

PROPOSAL

Contractor: _____

City: _____, State: _____

Date: _____, in the year of _____

The Honorable City Council
City of Bonney Lake
9002 Main Street East
Bonney Lake, WA 98391

Pursuant to and in compliance with your invitation for bids and all other documents relating thereto, the undersigned bidder, having familiarized himself with the terms of the contract, the local conditions affecting the performance of the contract, the cost of the work at the place where the work is to be done, proposes and agrees to perform, within the time stipulated, the contract, if this project is accepted, including all its component parts and everything required to be performed, and to provide and furnish any and all labor, materials, tools, expendable equipment, an all utility and transportation services necessary to perform the contract, complete, in a workmanlike manner, of all the work covered by the contract in connection with the City of Bonney Lake's project designated as ***Grainger Springs Pump House Replacement*** and as required by and in strict conformance with the specifications, contract plans and the standard plans for the following unit prices.

Note: Unit prices of all items; all extensions and total amount of bid must be shown. Show unit prices in both words and figures and, where conflict occurs, the written or typed words prevail.

Firm Name: _____

© RH2 Engineering, Inc., 2023

All bidders shall sign the proposal in the space provided.

The successful bidder shall execute and furnish the attached (no substitution allowed) performance bond and Agreement within twenty (20) calendar days after the date of award of contract unless a written extension is granted by City of Bonney Lake.

The contractor agrees to perform the complete contract work as specified, including corrections, finish and cleanup within **300** consecutive working days, beginning the date given in the notice to proceed by City of Bonney Lake.

The proposal, together with the Contract Documents, when endorsed by City of Bonney Lake shall become a contract binding on both parties thereto, whereby the contractor agrees to perform the complete contract work, as specified, and City of Bonney Lake agrees to make payment to the contractor, as specified, for said completed and accepted work.

Dated this_____ day of_____, in the year of_____

Contractor _____

Address _____

_____

Telephone _____ Washington State License No. _____

By: _____

Title: _____

Attest: (If Corporation)

_____

_____

Witness: (If Individual or Partnership)

_____

_____

Acknowledgement of Receipt of Addenda:

No. _____ Date _____ Initials _____

No. _____ Date _____ Initials _____

No. _____ Date _____ Initials _____

No. _____ Date _____ Initials _____

No. _____ Date _____ Initials _____

Firm Name: _____

© RH2 Engineering, Inc., 2023

SCHEDULE OF PRICES
Schedule A - Base Bid
Grainger Springs Pump House Replacement

Bid Item	Approx. Quantity	Description	Unit Price	Total Price
1.	1 LS	Mobilization, Demobilization, Site Preparation, and Clean-up $_____ (unit price in words)	$_____	$_____
2.	1 LS	Temporary Erosion and Sedimentation Control $_____ (unit price in words)	$_____	$_____
3.	1 LS	Excavation Safety and Shoring $_____ (unit price in words)	$_____	$_____
4.	1 LS	Demolition $_____ (unit price in words)	$_____	$_____
5.	1 LS	Site Work $_____ (unit price in words)	$_____	$_____
6.	1 LS	Dewatering $_____ (unit price in words)		
7.	1 LS	Site Utilities $_____ (unit price in words)	$_____	$_____
8.	1 LS	Excavation $_____ (unit price in words)	$_____	$_____
9.	630 TN	Imported Structural Backfill $_____ (unit price in words)	$_____	$_____
10.	115 CY	Topsoil $_____ (unit price in words)	$_____	$_____

Firm Name: _____

© RH2 Engineering, Inc., 2023

SCHEDULE OF PRICES
Schedule A - Base Bid
Grainger Springs Pump House Replacement

Bid Item	Approx. Quantity	Description	Unit Price	Total Price
11.	1 LS	Structural $_____ (unit price in words)	$_____	$_____
12.	1 LS	New Pump and Motor (Pump No. 1) $_____ (unit price in words)	$_____	$_____
13.	1 LS	New Motor and Refurbish and Relocate Existing Pump (Pump No. 2) $_____ (unit price in words)	$_____	$_____
14.	1 LS	Mechanical $_____ (unit price in words)	$_____	$_____
15.	1 LS	Electrical $_____ (unit price in words)	$_____	$_____
16.	1 LS	Telemetry and Automatic Control $_____ (unit price in words)	$_____	$_____
17.	1 LS	Construction Records and O&M Manuals $_____ (unit price in words)	$_____	$_____
18.	1 LS	Testing, Startup, and Training $_____ (unit price in words)	$_____	$_____
19.	1 FA	Minor Change $_Fifty Thousand_ (unit price in words)	$_50,000_____	$_50,000_____

Firm Name: _____

© RH2 Engineering, Inc., 2023

SCHEDULE OF PRICES
Schedule A - Base Bid
Grainger Springs Pump House Replacement

Bid Item	Approx. Quantity	Description	Unit Price	Total Price
		Subtotal Schedule A – Base Bid (Items 1 – 19)	$ _____	
		Washington State Sales Tax (9.5%)	$ _____	
		Total Schedule A – Base Bid Construction Cost	$ _____	

Firm Name: _____

© RH2 Engineering, Inc., 2023

SCHEDULE OF PRICES
Schedule B - Additive Bid
Grainger Springs Pump House Replacement

Bid Item	Approx. Quantity	Description	Unit Price	Total Price
B1.	1 LS	Caustic Soda Treatment System Improvements $_____ (unit price in words)	$_____	$_____
		Subtotal Schedule B – Additive Bid	$ _____	
		Washington State Sales Tax (9.5%)	$ _____	
		Total Schedule B – Additive Bid Construction Cost	$ _____	

SCHEDULE OF PRICES *Grainger Springs Pump House Replacement*	
Total Schedule A – Base Bid Construction Cost	$_____
Total Schedule B – Additive Bid Construction Cost	$_____
Grand Total	$_____

Firm Name: _____

© RH2 Engineering, Inc., 2023

Certification of Compliance with Wage Payment Statutes

The bidder hereby certifies that, within the three-year period immediately preceding the bid solicitation date (**Wednesday, January 10th, 2024**), that the bidder is not a "willful" violator, as defined in RCW 49.48.082, of any provision of chapters 49.46, 49.48, or 49.52 RCW, as determined by a final and binding citation and notice of assessment issued by the Department of Labor and Industries or through a civil judgment entered by a court of limited or general jurisdiction.

I certify under penalty of perjury under the laws of the State of Washington that the foregoing is true and correct.

_____
Contractor

_____
Signature of Authorized Official*

_____
Printed Name

_____
Title

_____ _____ _____
Date City State

Check one:

Individual ☐ Partnership ☐ Joint Venture ☐ Corporation ☐

State of Incorporation, or if not a corporation, State where business entity was formed:
_____

If a Co-partnership, give firm name under which business is transacted:
_____

***** If a corporation, proposal must be executed in the corporate name by the president or vice-president (or any other corporate officer accompanied by evidence of authority to sign). If a co-partnership, proposal must be executed by a partner.

Firm Name: _____

© RH2 Engineering, Inc., 2023

CONTRACT FORMS

CITY OF BONNEY LAKE CONTRACT

THIS CONTRACT, is made and entered into this _____ day of _____, 2024 by and between the CITY OF BONNEY LAKE, a Washington municipal corporation, hereinafter referred to as the "Owner" and _____, hereinafter referred to as the "Contractor."

WITNESSETH:

WHEREAS, the Owner desires to have certain work, services and/or tasks performed as set forth below requiring specialized skills and other supportive capabilities; and

WHEREAS, the Contractor represents that the Contractor is qualified and possesses sufficient skills and the necessary capabilities, including technical and professional expertise, to perform the work, services and/or tasks set forth in this Agreement; and

WHEREAS the Owner has heretofore caused to be prepared certain plans and specifications described as the _____ and the Contractor did on the _____ day of _____, 2024, file with the Owner a proposal to construct said work and agreed to accept as payment therefore the sum fully stated and set forth in the proposal; and

WHEREAS, the said Contract Documents fully and accurately described the terms and conditions upon which the Contractor proposes to furnish said equipment, labor, materials, and appurtenances and perform said work, together with the manner and time of furnishing same;

IT IS THEREFORE AGREED, first, the Contractor shall perform such work and accomplish such tasks, including the furnishing of all materials and equipment necessary for full performance thereof, as are identified and designated as Contractor responsibilities throughout this Agreement and as detailed in the plans and specifications described as _____ _____. It is agreed that a copy of said General Conditions and other Contract Documents filed with the Owner, as aforesaid, do, in all particulars, become a part of this Agreement by and between the parties hereto in all matters and things therein set forth and described;

AND FURTHER, that the Owner and the Contractor hereby accept and agree to the terms and conditions of said Contract Documents as filed as completely as if said terms and conditions and plans were herein set out in full.

IN WITNESS WHEREOF the parties hereto have caused this Agreement to be executed the day and year first hereinabove written.

CITY OF BONNEY LAKE	CONTRACTOR: _____
_____	By _____
Michael McCullough, Mayor	Title _____
Date: _____	Date: _____

© RH2 Engineering, Inc., 2023

© RH2 Engineering, Inc., 2023

City of Bonney Lake

PERFORMANCE AND GUARANTY BOND

We, _____ as the Contractor and _____ as Surety, jointly and severally bind ourselves, our heirs, successors and assigns, as set forth herein, to

BONNEY LAKE, WASHINGTON

(herein called the City) for payment of the penal sum of _____ dollars ($_____), lawful money of the United States. The City has awarded the Contractor a contract for the construction of

Grainger Springs Pump House Replacement

THE CONDITION OF THIS OBLIGATION IS SUCH that if the Contractor shall in all things abide by and well and truly keep and perform the covenants, and agreements in the said contract, any part to be kept and performed at the time and in the manner therein specified, and shall indemnify and save harmless the City from any defects in the workmanship and materials incorporated into the work for a period of one year after final acceptance of the work, as therein stipulated, this obligation shall become null and void, otherwise, it shall be and remain in full force
and effect.

This bond is provided in compliance with the requirements of Chapter 39.08, RCW, and shall be construed consistent therewith.

Electronic submittal is acceptable _____

_____
CONTRACTOR

(Attach Acknowledgement of Authorized Representative of Contractor)

© RH2 Engineering, Inc., 2023

City of Bonney Lake

Performance and Guaranty Bond – continued

Any claims under this Bond may be addressed to:

_____ (Name and address of SURETY)
_____
_____

(Name and address of Surety in WASHINGTON if
_____ different from above)
_____
_____

_____ (Telephone number of Surety's agent Washington)

(Attach Acknowledgement)

_____
SURETY

By:
_____
(Attorney-in-Fact)

APPROVED:
_____

NOTICE:

Sureties must be authorized to do business in and have an agent for service of process in Washington. Certified copy of Power of Attorney must be attached.

© RH2 Engineering, Inc., 2023

City of Bonney Lake

LABOR AND MATERIAL PAYMENT BOND

We, _____ as the Contractor and _____ as Surety, jointly and severally bind ourselves, our heirs, successors and assigns, as set forth herein, to

BONNEY LAKE, WASHINGTON

hereinafter "City" for the use and benefit of claimants as herein below defined, in the amount of _____ dollars ($_____).

Whereas, Contractor has by written agreement entered into a contract with City for

Grainger Springs Pump House Replacement

which contract is by reference made a part hereof;

NOW THEREFORE, the condition of this bond is such that is Contractor shall promptly make payment to all claimants as hereafter defined for all labor and material used or reasonably required for use in the performance of the contract, then this obligation shall be void, otherwise it shall remain in full force and effect.

A claimant is defined as any laborer, mechanic, subcontractor and materialman, and all persons who supply such person or persons or subcontractor with provisions and supplies for the carrying on of such work.

This Bond is issued simultaneously with a Performance Bond in favor of the City conditioned on full and faithful performance of the contract.

This Bond is provided in compliance with the requirements of Chapter 39.08 RCW and shall be construed consistent therewith.

Surety agrees that no change, extension of time, alteration, or addition to the terms of the contract, or the work to be performed thereunder, or the specifications shall in any way affect its obligation on this bond, and it does hereby waive notice thereof.

The Contractor and Surety agree that if the City is required to engage the services of an attorney in connection with the enforcement of this bond, each shall pay the City's reasonable attorney's fees incurred, with or without suit, in addition to the above sum.

Electronic submittal is acceptable

_____, 20____

_____

Contractor

(Attach acknowledgement of Authorized Representative of Contractor)

© RH2 Engineering, Inc., 2023

City of Bonney Lake

Labor and Material Payment Bond – Continued

Any claims under this Bond may be addressed to:

_____ (Name and address of SURETY)
_____
_____

(Name and address of Surety in WASHINGTON if different from above)

_____
_____
_____

_____ (Telephone number of Surety's agent Washington)

(Attach Acknowledgement)

_____ SURETY

By:

_____ (Attorney-in-Fact)

APPROVED:

_____

NOTICE:

Sureties must be authorized to do business in and have an agent for service of process in Washington. Certified copy of Power of Attorney must be attached.

© RH2 Engineering, Inc., 2023

City of Bonney Lake

CERTIFICATE OF INSURANCE

TO: City of Bonney Lake

Return this certificate to:

City of Bonney Lake
21719 96th St. E
Buckley, WA 98321

This certifies to City of Bonney Lake that the following described policies have been issued to the Insured named below and are in force at this time:

Insured_____

Address_____

Description of operations/locations/products (show contract name and/or number, if any)

Policies and Insureds	Limits		Policy Number	Expiration	Best's Rating
	Bodily Injury	Property Damage			
Comprehensive/General Liability	Each Person	Each Occurrence			
Worker's Compensation	Employer's Liability				
Automotive Liability	Each Person	Each Occurrence			

COMBINED SINGLE LIMIT

All policies are in effect at this time and will not be canceled, limited, or allowed to expire without renewal until after 30 days' written notice has been given to the Certificate Holder named on the top line. Any coverage afforded the Certificate Holder as an additional insured shall apply as primary and not excess to any insurance issued in the name of the Certificate Holder.

Note to Contractor: City of Bonney Lake and its authorized agents shall be named as additional insured for this policy.

© RH2 Engineering, Inc., 2023

ACORD™ CERTIFICATE OF LIABILITY INSURANCE OP ID SU FARIN-1 | DATE (MM/DD/YY) 10/02/00

PRODUCER

Hurley, Atkins & Stewart, Inc.
1800 Ninth Ave., #1500
Seattle WA 98101
Phone: 206-682-5656

THIS CERTIFICATE IS ISSUED AS A MATTER OF INFORMATION ONLY AND CONFERS NO RIGHTS UPON THE CERTIFICATE HOLDER. THIS CERTIFICATE DOES NOT AMEND, EXTEND OR ALTER THE COVERAGE AFFORDED BY THE POLICIES BELOW.

INSURERS AFFORDING COVERAGE

INSURED

INSURER A:
INSURER B:
INSURER C:
INSURER D:
INSURER E:

COVERAGES

THE POLICIES OF INSURANCE LISTED BELOW HAVE BEEN ISSUED TO THE INSURED NAMED ABOVE FOR THE POLICY PERIOD INDICATED. NOTWITHSTANDING ANY REQUIREMENT, TERM OR CONDITION OF ANY CONTRACT OR OTHER DOCUMENT WITH RESPECT TO WHICH THIS CERTIFICATE MAY BE ISSUED OR MAY PERTAIN, THE INSURANCE AFFORDED BY THE POLICIES DESCRIBED HEREIN IS SUBJECT TO ALL THE TERMS, EXCLUSIONS AND CONDITIONS OF SUCH POLICIES. AGGREGATE LIMITS SHOWN MAY HAVE BEEN REDUCED BY PAID CLAIMS.

INSR LTR	TYPE OF INSURANCE	POLICY NUMBER	POLICY EFFECTIVE DATE (MM/DD/YY)	POLICY EXPIRATION DATE (MM/DD/YY)	LIMITS	
	GENERAL LIABILITY				EACH OCCURRENCE	$
	COMMERCIAL GENERAL LIABILITY				FIRE DAMAGE (Any one fire)	$
	CLAIMS MADE / OCCUR				MED EXP (Any one person)	$
					PERSONAL & ADV INJURY	$
					GENERAL AGGREGATE	$
	GEN'L AGGREGATE LIMIT APPLIES PER:				PRODUCTS - COMP/OP AGG	$
	POLICY / PRO-JECT / LOC					
	AUTOMOBILE LIABILITY				COMBINED SINGLE LIMIT (Ea accident)	$
	ANY AUTO					
	ALL OWNED AUTOS				BODILY INJURY (Per person)	$
	SCHEDULED AUTOS					
	HIRED AUTOS				BODILY INJURY (Per accident)	$
	NON-OWNED AUTOS					
					PROPERTY DAMAGE (Per accident)	$
	GARAGE LIABILITY				AUTO ONLY - EA ACCIDENT	$
	ANY AUTO				OTHER THAN AUTO ONLY: EA ACC	$
					AGG	$
	EXCESS LIABILITY				EACH OCCURRENCE	$
	OCCUR / CLAIMS MADE				AGGREGATE	$
						$
	DEDUCTIBLE					$
	RETENTION $					$
	WORKERS COMPENSATION AND EMPLOYERS' LIABILITY				WC STATU-TORY LIMITS / OTH-ER	
					E.L. EACH ACCIDENT	$
					E.L. DISEASE - EA EMPLOYEE	$
					E.L. DISEASE - POLICY LIMIT	$
	OTHER					

SAMPLE

DESCRIPTION OF OPERATIONS/LOCATIONS/VEHICLES/EXCLUSIONS ADDED BY ENDORSEMENT/SPECIAL PROVISIONS

CERTIFICATE HOLDER | N | ADDITIONAL INSURED; INSURER LETTER: ____

- - - - - - -

CANCELLATION

SHOULD ANY OF THE ABOVE DESCRIBED POLICIES BE CANCELLED BEFORE THE EXPIRATION DATE THEREOF, THE ISSUING INSURER WILL ~~ENDEAVOR TO~~ MAIL _____ DAYS WRITTEN NOTICE TO THE CERTIFICATE HOLDER NAMED TO THE LEFT. ~~BUT FAILURE TO DO SO SHALL IMPOSE NO OBLIGATION OR LIABILITY OF ANY KIND UPON THE INSURER, ITS AGENTS OR REPRESENTATIVES.~~

ACORD 25-S (7/97) ©ACORD CORPORATION 1988

© RH2 Engineering, Inc., 2023

City of Bonney Lake

CERTIFICATE AS TO CORPORATE PRINCIPAL

I, _____, certify that I am the

_____ of the corporation named as Contractor in the Agreement attached hereto, that _____, who signed said Agreement on behalf of the Contractor, was the _____ of said corporation; that said Agreement was duly signed on and in behalf of said corporation by authority of its governing body, and is within the scope of its corporate powers.

By:_____

Title:_____

State of _____)
) SS.
County of_____)

_____ being duly sworn deposes

and says that he is _____ of

_____.
(Name of Organization)

Subscribed and sworn to before me this

_____ day of _____, 20____

_____
Notary Public

My commission expires _____, 20____

Bond No. _____

© RH2 Engineering, Inc., 2023

© RH2 Engineering, Inc., 2023

City of Bonney Lake

CERTIFICATE AS TO CORPORATE SEAL

I hereby certify that I am the (Assistant) Secretary of the Corporation named as Principal in the within Bond; that _____ signed the said Bond on behalf of the Principal was _____ of said Corporation; that I know his signature thereto is genuine, and that said Bond was duly signed, sealed, and attested for in behalf of said Corporation by authority of its governing body.

_____
Secretary or Assistant Secretary

A copy of this bond shall be filed with the County Auditor, except in the case where the Contract is with a City or Town.

© RH2 Engineering, Inc., 2023

© RH2 Engineering, Inc., 2023

CONTRACTOR'S DECLARATION OF OPTION FOR MANAGEMENT OF STATUTORY RETAINED PERCENTAGE

PROJECT NAME:
GRAINGER SPRINGS PUMP HOUSE REPLACEMENT

☐ The City shall withhold the retained percentage for this Contract from time-to-time as such retained percentage accrues and in accordance with RCW 60.28.011. I hereby elect to have the retained percentage for this Contract held in a fund by the City until 60 days following final acceptance of the work. (No interest will be earned on the retained percentage amount under this election.)

CONTRACTOR: _____

BY: _____

TITLE: _____

DATE: _____

☐ I hereby elect to have the City deposit the retained percentage for this Contract, from time-to-time, as such retained percentage accrues and in accordance with RCW 60.28.011 (4)(b).

I hereby designate _____ as the depositary for said fund, which shall be deposited in an interest earning account subject to joint control by City and the Contractor. All interest earned on said deposits shall belong to the Contractor. If Contractor fails to designate the depositary, then the City designates _____, which is the City's depositary under contract between said bank and the City of Bonney Lake.

I hereby further agree to be fully responsible for payment of all costs of fees incurred as a result of establishing said depositary account and depositing the retained percentage as authorized by statute. The City shall not be liable in any way for any costs or fees in connection therewith.

CONTRACTOR: _____

BY: _____

TITLE: _____

DATE: _____

© RH2 Engineering, Inc., 2023

☐ I hereby elect to submit a bond for all or any portion of the contract retainage in a form acceptable to the City of Bonney Lake and from a bonding company meeting standards established by the City in accordance with RCW 60.28.011(6). The City shall accept a bond meeting these requirements unless the City can demonstrate good cause for refusing to accept it. This bond and any proceeds therefrom are subject to all claims and liens and in the same manner and priority as set forth for retained percentages in this chapter. The City shall release the bonded portion of the retained funds to the contractor within thirty days of accepting the bond from the contractor. Whenever the City accepts a bond in lieu of retained funds from a contractor, the contractor shall accept like bonds from any subcontractors or suppliers from which the contractor has retained funds. The contractor shall then release the funds retained from the subcontractor or supplier to the subcontractor or supplier within thirty days of accepting the bond from the subcontractor or supplier.

CONTRACTOR: _____

BY: _____

TITLE: _____

DATE: _____

© RH2 Engineering, Inc., 2023

Form **W-9**
(Rev. October 2018)
Department of the Treasury
Internal Revenue Service

Request for Taxpayer Identification Number and Certification

▶ Go to *www.irs.gov/FormW9* for instructions and the latest information.

Give Form to the requester. Do not send to the IRS.

Print or type. See Specific Instructions on page 3.

1 Name (as shown on your income tax return). Name is required on this line; do not leave this line blank.

2 Business name/disregarded entity name, if different from above

3 Check appropriate box for federal tax classification of the person whose name is entered on line 1. Check only **one** of the following seven boxes.

☐ Individual/sole proprietor or single-member LLC ☐ C Corporation ☐ S Corporation ☐ Partnership ☐ Trust/estate

☐ Limited liability company. Enter the tax classification (C=C corporation, S=S corporation, P=Partnership) ▶ _____

Note: Check the appropriate box in the line above for the tax classification of the single-member owner. Do not check LLC if the LLC is classified as a single-member LLC that is disregarded from the owner unless the owner of the LLC is another LLC that is **not** disregarded from the owner for U.S. federal tax purposes. Otherwise, a single-member LLC that is disregarded from the owner should check the appropriate box for the tax classification of its owner.

☐ Other (see instructions) ▶

4 Exemptions (codes apply only to certain entities, not individuals; see instructions on page 3):

Exempt payee code (if any) _____

Exemption from FATCA reporting code (if any) _____

(Applies to accounts maintained outside the U.S.)

5 Address (number, street, and apt. or suite no.) See instructions.

Requester's name and address (optional)

6 City, state, and ZIP code

7 List account number(s) here (optional)

Part I Taxpayer Identification Number (TIN)

Enter your TIN in the appropriate box. The TIN provided must match the name given on line 1 to avoid backup withholding. For individuals, this is generally your social security number (SSN). However, for a resident alien, sole proprietor, or disregarded entity, see the instructions for Part I, later. For other entities, it is your employer identification number (EIN). If you do not have a number, see *How to get a TIN*, later.

Note: If the account is in more than one name, see the instructions for line 1. Also see *What Name and Number To Give the Requester* for guidelines on whose number to enter.

Social security number
☐☐☐ – ☐☐ – ☐☐☐☐

or

Employer identification number
☐☐ – ☐☐☐☐☐☐☐

Part II Certification

Under penalties of perjury, I certify that:

1. The number shown on this form is my correct taxpayer identification number (or I am waiting for a number to be issued to me); and
2. I am not subject to backup withholding because: (a) I am exempt from backup withholding, or (b) I have not been notified by the Internal Revenue Service (IRS) that I am subject to backup withholding as a result of a failure to report all interest or dividends, or (c) the IRS has notified me that I am no longer subject to backup withholding; and
3. I am a U.S. citizen or other U.S. person (defined below); and
4. The FATCA code(s) entered on this form (if any) indicating that I am exempt from FATCA reporting is correct.

Certification instructions. You must cross out item 2 above if you have been notified by the IRS that you are currently subject to backup withholding because you have failed to report all interest and dividends on your tax return. For real estate transactions, item 2 does not apply. For mortgage interest paid, acquisition or abandonment of secured property, cancellation of debt, contributions to an individual retirement arrangement (IRA), and generally, payments other than interest and dividends, you are not required to sign the certification, but you must provide your correct TIN. See the instructions for Part II, later.

Sign Here **Signature of U.S. person ▶** **Date ▶**

General Instructions

Section references are to the Internal Revenue Code unless otherwise noted.

Future developments. For the latest information about developments related to Form W-9 and its instructions, such as legislation enacted after they were published, go to *www.irs.gov/FormW9*.

Purpose of Form

An individual or entity (Form W-9 requester) who is required to file an information return with the IRS must obtain your correct taxpayer identification number (TIN) which may be your social security number (SSN), individual taxpayer identification number (ITIN), adoption taxpayer identification number (ATIN), or employer identification number (EIN), to report on an information return the amount paid to you, or other amount reportable on an information return. Examples of information returns include, but are not limited to, the following.

- Form 1099-INT (interest earned or paid)
- Form 1099-DIV (dividends, including those from stocks or mutual funds)
- Form 1099-MISC (various types of income, prizes, awards, or gross proceeds)
- Form 1099-B (stock or mutual fund sales and certain other transactions by brokers)
- Form 1099-S (proceeds from real estate transactions)
- Form 1099-K (merchant card and third party network transactions)
- Form 1098 (home mortgage interest), 1098-E (student loan interest), 1098-T (tuition)
- Form 1099-C (canceled debt)
- Form 1099-A (acquisition or abandonment of secured property)

Use Form W-9 only if you are a U.S. person (including a resident alien), to provide your correct TIN.

If you do not return Form W-9 to the requester with a TIN, you might be subject to backup withholding. See What is backup withholding, *later.*

Cat. No. 10231X Form **W-9** (Rev. 10-2018)

© RH2 Engineering, Inc., 2023

© RH2 Engineering, Inc., 2023

CITY OF BONNEY LAKE
PUBLIC SERVICES DEPARTMENT
21719 96th St. E
Buckley, WA 98321
Ph: 253.862.8602

WARRANTY AND DEFECT BOND

NAME OF PROJECT: _____ BOND NO. _____

LOCATION/ADDRESS _____

PROJECT NO.: _____

WE, _____, as Principal, and _____, a corporation organized and existing under and by virtue of the laws of the State of _____, Legally doing business in the State of Washington, as Surety, are held and firmly bound unto the City of Bonney Lake, Pierce County, Washington, as Obligee, in the penal sum of_____ Dollars ($_____), for the payment of which we firmly bind ourselves, our legal representatives, successors and assigns, jointly and severally.

WHEREAS, the Principal has completed the project known as **GRAINGER SPRINGS PUMP HOUSE REPLACEMENT**, located in the City of Bonney Lake, Pierce County, Washington, and the Principal has constructed certain improvements in connection with said Project and intends to secure the successful operation of said improvements pursuant to the Project Contract

NOW, THEREFORE, THE CONDITIONS OF THIS OBLIGATION are such that if the improvements constructed by the Principal shall successfully operate for a period of one year from the satisfactory completion of the facility or Final plat approval, whichever is later, and shall remain free of defect in workmanship and materials for the period, then this obligation shall be null and void, otherwise to remain in full force and effect.

IT IS FURTHER EXPRESSLY PROVIDED THAT:

1. Until written release of this obligation by the Obligee, this bond may not be terminated or cancelled by the Principal or Surety for any reason.
2. Damage from expected usage and damage due to construction activities shall be considered “defects” for purposes of this bond.
3. In the event of any failure of the improvements to satisfactorily perform or in the event of a defect in the workmanship or materials, the Principal or Surety shall make prompt and adequate repair to correct the failure or defect. In the event these repairs are not made within 45 days of notice by either the Principal or Surety, the Surety shall, upon demand, tender the total bond amount to the Obligee. After making the repairs, the Obligee will return any unexpected funds, without interest, to the Surety.
4. In the event the Obligee determines that repairs must be performed immediately to prevent risk to person and property, the Obligee may make the repairs and the cost of those repairs shall be paid by the Principal or Surety.
5. The Principal shall be obligated to make the repairs described above, which obligation shall not be limited by the amount of this bond.

© RH2 Engineering, Inc., 2023

CITY OF BONNEY LAKE WARRANTY AND DEFECT BOND

This Bond is issued pursuant to chapter 39.08 RCW and shall be interpreted in compliance with said chapter.

PRINCIPAL		**SURETY**	
By:	_____	**By:**	_____
Printed Name	_____	**Printed Name**	_____
Date:	_____	**Date:**	_____
Mailing Address	_____	**Mailing Address**	_____
	_____		_____
	_____		_____
Phone No.	_____	**Phone No.**	_____

STATE OF WASHINGTON)
) SS
COUNTY OF PIERCE)

I certify that I know or have seen satisfactory that _____signed this instrument and acknowledged it to be his/her free and voluntary act for the uses and purposes mentioned in the instrument.

WITNESS WHEREOF, I have hereunto set my hand and official seal the day and year first above written.

_____

Printed Name: _____

NOTARY PUBLIC in and for the State of Washington,
Residing at: _____

My commission expires: _____

© RH2 Engineering, Inc., 2023

State of Washington
Business Licensing Service
PO Box 9034
Olympia WA 98507-9034
1-800-451-7985
business.wa.gov/BLS

UBI
Owner name

City Business License Addendum

This form must be submitted with a completed
Business License Application and required fees.

For faster service - Apply online

Online applications are typically processed within two business days. It may take up to 21 days if you file by mail.

Refer to the instructions and list of cities for this form on page 1 & 2.

A **All city license applicants must complete this section.**

1. Are you registered with the Washington Secretary of State as a nonprofit corporation? ..... ☐ Yes ☐ No
2. Is your organization tax exempt under IRS code 501(c)(3),(4), or (5)? ..... ☐ Yes ☐ No
   If yes, attach a copy of your IRS tax exemption certificate.
3. Are you a general or specialty construction contractor? ..... ☐ Yes ☐ No

   If yes, provide the Dept. of Labor & Industries registration number (if known): _____
4. If you hold a WA State professional/occupational license, indicate the license type and number.

Type *(day care, cosmetology, real estate, etc.)*	Number *(if known)*

5. Do you provide utility service (telephone/cellular/ISP, cable, gas, electric, garbage)? ..... ☐ Yes ☐ No

B **Complete this section for a city license if your business is physically located inside city limits.**

1. From the city names and fees listed on page 1 of this form, indicate the city where your business is physically located and the associated fee amount:

City name	License fee amount $
Number of employees (at this location)	Total employee fees (if applicable) $
Number of rental units (for Fife only)	Total rental unit fees (for Fife only) $

For variable fee cities, see appropriate city *"Requirements and Fee Calculation" document* for more information.

2. First date of business in the city indicated: _____
3. Have you held a business license in this city? ☐ Yes ☐ No Prior city license #(if known) _____
4. Check any of the following that can be found at this business location:
   - ☐ Automatic smoke detection system or fire sprinkler system installed
   - ☐ Any compressed gases (oxygen, helium, acetylene, propane, nitrous oxide, etc.)
   - ☐ Discharges to the sewer from the business or business processes other than domestic sanitary discharges
   - ☐ Any flammable/hazardous/toxic materials (gasoline, oil, cleaning solvents, pesticides, etc.)
     Average gallons or pounds kept on premises: _____
   - ☐ Floor drains other than in restroom/shower facilities
   - ☐ None of the above

For assistance or to request this document in an alternate format, visit http://business.wa.gov/BLS or call 1-800-451-7985. Teletype (TTY) users may use the Washington Relay Service by calling 711.

BLS 700-060 (12/22/15) PAGE 3 OF 4

© RH2 Engineering, Inc., 2023

B Section B continued

5. Is the physical address of the business in a residence? ☐ Yes ☐ No
   If yes, how many customers will be visiting the residence per week? _____
   Some cities have special home occupation regulations, please contact the city for more information.
6. Square feet of floor space used by your business at this location: _____
7. Will you be making any exterior or interior modifications, including signs, to the proposed business location? ☐ Yes ☐ No
8. Give the name and phone number of two after-hours Emergency Contact persons for this business location:

Name	Phone number ( )
Name	Phone number ( )

9. Do you have emergency alarm monitoring service? ☐ Yes ☐ No
   If yes, provide the following information:

Monitoring Company	Company Contact	Contact phone number ( )

10. Mark any of the following activities that will be conducted at or from this business location:

- ☐ Adult Entertainment
- ☐ Ambulance Service/Dispatch
- ☐ Amusement Devices/Arcades
- ☐ Buy/Sell Used Goods
- ☐ Care Provider for Adults or Children
- ☐ Charging Admission
- ☐ Civic, Social, Religious Gathering with food/drink consumption, transportation, entertainment, etc.
- ☐ Dispensing
- ☐ Gambling
- ☐ Health Care/Medical
- ☐ Manufacturing, Assembling, Producing, Packaging
- ☐ Painting
- ☐ Recycling
- ☐ Repairing
- ☐ Retail/Wholesale Sales
- ☐ Serve Liquor
- ☐ Sexually Oriented Business
- ☐ Storing/Warehousing
- ☐ Taxi or For Hire Service/ Dispatch

C Complete this section only for city licenses if there is no physical location inside the city limits.

1. From the cities and fees shown on page 1, list all the cities that you will travel into to conduct business.

City name	First date of business	Previous city license number (if known)	Number of employees	Employee fees (variable fee cities only)	City license fee	Total fee amount
				$	$	$
				$	$	$
				$	$	$
				$	$	$
				$	$	$
				$	$	$
				$	$	$
				$	$	$
				$	$	$
				$	$	$
					Total amount due for non-resident cities	$

For assistance or to request this document in an alternate format, visit http://business.wa.gov/BLS or call 1-800-451-7985. Teletype (TTY) users may use the Washington Relay Service by calling 711.
BLS 700-060 (12/22/15) PAGE 4 OF 4

© RH2 Engineering, Inc., 2023

PREVAILING WAGES

Department of Labor and Industries
Prevailing Wage
(360) 902-5335
www.lni.wa.gov/TradesLicensing/PrevWage

STATEMENT OF INTENT TO PAY PREVAILING WAGES

Public Works Contract
$40.00 Filing Fee Required

- This form **must** be typed or printed in ink.
- **Fill in all blanks or the form will be returned for correction (see instructions).**
- Please allow a **minimum** of 10 working days for processing.
- Once approved, your form will be posted online at https://fortress.wa.gov/lni/pwiapub/SearchFor.asp

Intent ID # (Assigned by L&I)_____

Your Company Information		
Your Company Name ABC Company, Inc.		
Your Address 1234 Main Street		
City Olympia	State WA	Zip+4 98501-1234
Your Contractor Registration Number ABCCI*0123AA	Your UBI Number 123456789	
Your Industrial Insurance Account Number 111,111-11		
Your Email Address (required for notification of approval) prevailingwage@lni.wa.gov	Your Phone Number (555) 555-5555	

Awarding Agency Information		
Project Name Road Repair	Contract Number 2011-01B	
Awarding Agency WA State Department of Transportation		
Awarding Agency Address PO Box 47354		
City Olympia	State WA	Zip+4 98501
Awarding Agency Contact Name John Doe	Phone Number (555) 555-5555	
County Where Work Will Be Performed Thurston	City Where Work Will Be Performed Olympia	

Additional Details	
Your Expected Job Start Date (mm/dd/yyyy) 01/01/2011	
Job Site Address/Directions State Street @ Plum Street	

Contract Details	
Bid Due Date (**Prime Contractor's**) 08/01/2010	Award Date (**Prime Contractor's**) 08/10/2010
Indicate Total Dollar Amount of **Your** Contract (including sales tax) or time and materials, if applicable.	$1000.00

ARRA Funds
Does this project utilize American Recovery and Reinvestment Act (ARRA) funds? ☐ Yes ☒ No

Weatherization or Energy Efficient Funds
Does this project utilize any weatherization or energy efficiency upgrade funds (ARRA or otherwise)? ☐ Yes ☒ No

Prime Contractor's Company Information	
Prime Contractor's Company Name XYZ Company, Inc.	Prime Contractor's Intent Number 123456
Prime Contractor's Registration Number XYZIN*0123AA	Prime Contractor's UBI Number 987654321

Hiring Contractor's Company Information	
Hiring Contractor's Company Name Super Pavers, Inc.	
Hiring Contractor's Contractor Registration Number SUPERPA123AA	Hiring Contractor's UBI Number 321456987

Employment Information					
Do you intend to use **ANY** subcontractors?	☐ Yes	☒ No	Will employees perform work on this project?	☒ Yes	☐ No
Will **ALL** work be subcontracted?	☐ Yes	☒ No	Do you intend to use apprentice employees?	☒ Yes	☐ No

Number of Owner/Operators who own at least 30% of the company who will perform work on the project: ☐ None (0) ☒ One (1) ☐ Two (2) ☐ Three (3)

Crafts/Trades/Occupations – (Do not list apprentices. They are listed on the Affidavit of Wages Paid only.) If an employee works in more than one trade, ensure that all hours worked in each trade are reported below. For additional crafts/trades/occupations please use Addendum A.	**Number of Workers**	**Rate of Hourly Pay**	**Rate of Hourly Usual ("Fringe") Benefits**
Laborer - Asphalt Raker	**2**	**39.28**	**5.00**
Power Equipment Operator - Asphalt Plant Operator	**1**	**48.04**	**2.35**
Truck Driver - Asphalt Mix (over 16 Yds)	**1**	**46.47**	**0.00**

Signature Block

I hereby certify that I have read and understand the instructions to complete this form and that the information, including any addenda, are correct and that all workers I employ on this Public Works Project will be paid no less than the Prevailing Wage Rate(s) as determined by the Industrial Statistician of the Department of Labor and Industries.

Print Name:	**Print Title:**	**Signature:**	**Date:**

For L&I Use Only
Approved by signature of the Department of Labor and Industries Industrial Statistician

NOTICE: If the prime contract is at a cost of over one million dollars ($1,000,000.00), RCW 39.04.370 requires you to complete the EHB 2805 (RCW 39.04.370) Addendum and attach it to your Affidavit of Wages of Paid when your work on the project concludes. This is only a notice. The EHB 2805 Addendum is not submitted with this Intent.

SAMPLE - F700-029-000 Statement of Intent to Pay Prevailing Wages 03-2011

SAMPLE

© RH2 Engineering, Inc., 2023

Department of Labor & Industries
Prevailing Wage Program
P.O. Box 44540
Olympia, Washington 98504-4540
Phone (360) 902-5335 / Fax (360) 902-5300

INSTRUCTIONS
STATEMENT OF INTENT TO PAY PREVAILING WAGES
FOR PUBLIC WORKS CONTRACTS

COMPLETE ALL FIELDS ON THE FORM

The numbered blocks in the following instructions correspond to the numbered Statement of Intent to Pay Prevailing Wage above. In addition a completed sample form (without numbers) is included at the end of these instructions.

1 **Your Company Information** - Enter the following information:

a) Your **Company Name** and **Address**.

b) Your **Contractor Registration Number** – You can verify this number at: https://fortress.wa.gov/lni/bbip/Search.aspx.

c) Your **UBI Number** (Unified Business Identifier) – This 9-digit number registers you with several state agencies and allows you to do business in Washington. You can verify this number at: https://fortress.wa.gov/dol/dolprod/bpdLicenseQuery/.

d) Your **Industrial Insurance Account Number** – You can verify this number at: https://fortress.wa.gov/lni/crpsi/MainMenu.aspx?MessageId=2001.

e) Please provide your **Email Address** so that L&I can notify you of form approval and/or any required corrections. If you do not provide this information, L&I will use standard mail to send you correction notices. You can access approved forms at: https://fortress.wa.gov/lni/pwiapub/SearchFor.asp. No notice of approval will be mailed.

f) Your company **Phone Number**.

2 **Awarding Agency Information –** Enter the following information regarding the agency that awarded the contract. This information is available from the Prime Contractor:

a) **Project Name** – This is the name the Awarding Agency assigned to the project.

b) **Contract Number** – This is the number the Awarding Agency assigned to the project.

c) **Awarding Agency** – This is the name of the agency that awarded the contract.

d) Please enter the **Street Address**, **City**, **State** and **Zip+4** for the Awarding Agency.

e) **Awarding Agency Contact Name and Phone Number** – Enter the name and phone number of the person the Prime Contractor communicates with at the Awarding Agency.

f) **County Where Work Will Be Performed** – Enter the name of the county where the work will be performed. If the work will be performed in multiple counties, include the names of all counties where work will be performed.

g) **City Where Work Will Be Performed** – Enter the name of the city where the work will be performed. If the work will be performed outside the limits of any city, or in multiple cities, include the name of the nearest city.

3 **Additional Details**

a) **Your Expected Job Start Date** – This is the date that you expect to begin work on the project.

b) **Job Site Address/Directions –** Enter the specific address of the project or provide brief details regarding the location of the site, if no specific address exists.

© RH2 Engineering, Inc., 2023

4

Contract Details

a) **Bid Due Date** – Enter the date the **Prime Contractor** had to submit the bid to the Awarding Agency for this project (mm/dd/yyyy).

- **What if my contract was not bid?** – If the contract you will be working under was not required to be bid, you will enter the date the contract was awarded.

b) **Award Date** – This is the date the awarding agency awarded the contract to the **Prime Contractor** (mm/dd/yyyy).

c) **Indicate the Total Dollar Amount of Your Contract –** Enter the dollar amount of **your** contract, including the applicable sales tax. If this is a "time and materials" contract, please indicate this by checking the box next to "T&M."

5

ARRA & Weatherization Funding Questions – Enter the information regarding the source of funds. This information should be obtained from the Awarding Agency or the Prime Contractor.

a) Does this project utilize American Recovery and Reinvestment Act (ARRA) funds?

b) Does this project utilize any weatherization or energy efficiency upgrade funds (ARRA or otherwise)?

6

Prime Contractor's Company Information – Enter the information about the contractor who has the direct contract with the Awarding Agency:

a) **Prime Contractor's Company Name** – Enter the Prime Contractor's company name.

b) **Prime Contractor's Intent ID Number** – Enter the Prime Contractor's Approved Intent ID Number.

c) **Prime Contractor's Registration Number** – Enter the Contractor Registration Number for the Prime Contractor. You can verify the number at: https://fortress.wa.gov/lni/bbip/Search.aspx.

d) **Prime Contractor's UBI Number** – Enter the UBI number for the Prime Contractor. You can verify this number at: https://fortress.wa.gov/dol/dolprod/bpdLicenseQuery/.

7

Hiring Contractor's Company Information – Enter the information about the Hiring Contractor. This is the contractor who hired or contracted your firm to perform work on this project:

a) **Hiring Contractor's Company Name** – Enter the company name of the contractor who hired or contracted with your firm to perform work on this project.

b) **Hiring Contractor's Registration Number** – Enter the Contractor Registration Number for the contractor who hired you. You can verify the number at: https://fortress.wa.gov/lni/bbip/Search.aspx.

c) **Hiring Contractor's UBI Number** – Enter the UBI Number for the contractor who hired you. You can verify this number at: https://fortress.wa.gov/dol/dolprod/bpdLicenseQuery/.

8

Employment Information – Enter information about the individuals who will perform work on this project:

a) **Do you intend to use subcontractors?** – If **PART** of the work will be performed by subcontractors you will hire, check the "Yes" box.

b) **Will employees perform work on this project?** - If employees, including apprentices, will perform any work on the project, check the "Yes" box and list each employee's applicable craft/trade/occupation. Do not list the actual apprentice, just the craft/trade/occupation the apprentice will be working in. Also, please note the information regarding apprentices in "d" below. **If you choose "No" and this changes later, you certify that you will submit a new Intent form listing workers.**

c) **Will All work be subcontracted?** – If **ALL** work will be performed by subcontractors, check the "Yes" box.

d) **Do you intend to use apprentice employees?** – If you plan to employ apprentices on this project please be aware:

- Any workers **NOT** registered with the Washington State Apprenticeship and Training Council (WSATC) must be paid the correct journey-level prevailing rate of wage.
- Any apprentice **NOT** registered with the WSATC within 60 days of hiring must be paid at the correct journey-level prevailing rate of wage for the time preceding the date of registration.

Instructions - F700-029-000 Statement of Intent to Pay Prevailing Wages 03-2011

© RH2 Engineering, Inc., 2023

- You **must** be a registered training agent with the WSATC in order to pay a registered apprentice less than journey-level prevailing rate of wage.
- To verify apprenticeship and/or registered training agent status call (360) 902-5324.

e) **Number of Owners/Operators who own at least 30% of the company who will perform work on this project –** Indicate the number of Owners/Operator(s) who will perform work on this project. If no 30%+ Owners/Operators will perform work on the project, check the box "None".

9

Crafts/Trades/Occupations – List each craft/trade/occupation of all workers you plan to employ on this project.

❖ **Crafts/Trades/Occupations**

If you indicated above that Owners/Operators will work on this project, and you also indicated above that no employees will perform work on the project, or **ALL** work will be subcontracted, then you do not need to fill in this section. (Individuals who own less than 30% of the company are not considered to be Owners/Operators, and must be listed as employees and paid the correct prevailing rate of wage.)

Use **Addendum A** for additional Crafts/Trades/Occupations that will not fit on this form.

Residential Construction – If you are using any residential classifications (e.g. Residential Carpenter, Residential Laborer, etc.) you must provide information regarding the following questions, on **Addendum C**, in order for L&I to determine if residential rates are being utilized appropriately:

1. Did the Awarding Agency, in compliance with RCW 39.12.030, determine that the project/work contracted for meets the definition of residential construction?
2. Please indicate the type of structure (e.g. single-family dwelling, duplex, apartment, condominium or other residential structure).
3. Including any basement or garage, how many stories or levels does the structure have?
4. What is the facility used for? - Answer "yes" or "no" to each of the following options:
   a. Permanent residence only?
   b. Rehabilitation house?
   c. Transitional housing?
   d. Communal dining facility?
   e. Treatment services?
   f. Counseling?
   g. Other?
5. Does each dwelling unit have its own full, self-contained kitchen?
6. Does each dwelling unit have its own full bathroom?
7. Is there a community facility or manager's office on site?
8. Is any part of the facility used by members of the public?

Landscape Construction – If you are using "Landscape Construction" or any of the sub-classifications within Landscape Construction (e.g., Landscape or Planting Laborer, Irrigation or Lawn Sprinkler Installers, or Landscape Equipment Operators or Truck Drivers) you must provide information on **Addendum C** regarding the following aspects of the work in order for L&I to determine if you are appropriately applying Landscape Construction rates:

1. The beautification of a plot of land through addition of or modification to lawns, trees and bushes under the Landscape Construction Scope of Work (WAC 296-127-01346) is a limited universe and has exclusions that may affect its application. Please provide L&I with the following information so we can verify whether the landscape construction wage rates apply to this project.
   a. Please describe the whole project – not just your part.
   b. Please describe your part(s) of the project – the tasks you performed, equipment used, and tools used. Please provide as much detail as you can.

© RH2 Engineering, Inc., 2023

c. If the project involves installing an irrigation system, trenching, installing French drains or other subsurface water collection systems, or spreading top soil or mulch, please tell us the relevant depths.

2. If Operating Engineers and/or Truck Drivers will be used in addition to Landscape Construction, describe the type of equipment used, and list the size or rated capacity of the equipment.

10 **Number of Workers** – Enter the number of journey-level workers you plan to employ on this project for that craft/trade/occupation.

11 **Rate of Hourly Pay** – Enter the rate of hourly pay as defined by RCW 39.12.010, that you will actually pay the worker(s) for that craft/trade/occupation. The amount listed for "Rate of Hourly Pay" plus the amount listed for the "Rate of Hourly Fringe Benefits," if any, must equal or exceed the applicable prevailing rate of wage.

12 **Rate of Hourly Usual ("Fringe") Benefits** – Enter the rate of hourly Usual ("fringe") Benefits for that craft/trade/occupation. This is the cost of usual benefits, as defined by RCW 39.12.010, that you will actually pay the worker(s). The amount listed for "Rate of Hourly Pay" plus the amount listed for "Rate of Hourly Usual ("Fringe") Benefits," if any, must equal or exceed the applicable prevailing rate of wage.

If there is not enough space to list all required information on one form, use the appropriate Addendum as needed. No additional fee is required for using Addendums to the form. No other attachments will be accepted.
L&I's approval of your Statement of Intent to Pay Prevailing Wages is based on the information you provide. Approval of the form does not signify that the classifications of labor you listed on the form are the correct classifications of work for the tasks performed on the public works project. It is your responsibility to pay workers the prevailing rate of wage for the classification of work that correctly applies to the actual work they perform.

Be sure to include your email address on the form. **If you do not provide this information, L&I will use standard mail to send you correction notices. You will be able to access approved forms at: https://fortress.wa.gov/lni/pwiapub/SearchFor.asp (No notice of approval will be mailed)**.

MAILING INSTRUCTIONS

*You must mail the completed and signed form with **original signature** (a photocopy of a signature will **not** be accepted) with the $40 filing fee to:*

Management Services
Department of Labor & Industries
Prevailing Wage Program
PO Box 44835
Olympia, WA 98504-4835

FURTHER INFORMATION

Make checks payable to:

Department of Labor and Industries

*If you have questions or would like assistance in completing the form, please call us at **(360) 902-5335** or email the Prevailing Wage office at pw1@Lni.wa.gov.*

Prevailing wage rates are available on the Internet at:

http://www.lni.wa.gov/TradesLicensing/PrevWage/WageRates/default.asp

Instructions - F700-029-000 Statement of Intent to Pay Prevailing Wages 03-2011

© RH2 Engineering, Inc., 2023

Department of Labor and Industries
Prevailing Wage Program
(360) 902-5335
www.Lni.wa.gov/TradesLicensing/PrevWage/default.asp

Affidavit of Wages Paid

Public Works Contract

$40.00 Filing Fee Required*

*Exemption may apply. See instruction 9.

Affidavit ID # (Assigned by L&I):

 # WA67554-9090

This form **must** be typed or printed in ink.
Fill in ALL blanks or the form will be returned for correction (see instructions).
Please allow a **minimum** of 10 business days for processing.
Once approved, your form will be posted online at:
https://fortress.wa.gov/lni/wagelookup/searchforms.aspx

Your Company Information			Awarding Agency Information		
Your Company Name ABC Company			Project Name Road Repair	Contract Number 123-456	
Your Company Address 1234 Main Street			Awarding Agency WA St Department of Transportation		
City Olympia	State WA	Zip+4 98501-1234	Awarding Agency Address PO Box 123		
Your Contractor Registration Number ABCCI*0123AA	Your UBI Number 123456789		City Olympia	State WA	Zip+4 98501
Your Industrial Insurance Account Number 111,111-11			Awarding Agency Contact Name John Doe	Phone Number (555) 555-5555	
Your Email Address (required for notification of approval) prevailingwage@lni.wa.gov	Your Phone Number (555) 555-5555		County Where Work Was Performed Thurston	City Where Work Was Performed Olympia	

Additional Details		Contract Details	
Your Job Start Date (mm/dd/yyyy) 2/1/2011	**Your** Date Work Completed (mm/dd/yyyy) 3/1/2011	Bid Due Date (**Prime Contractor's**) 1/1/2011	Award Date (**Prime Contractor's**) 1/5/2011
Job Site Address/Directions Plum and State Street	Your Approved Intent ID # 123456	Indicate Total Dollar Amount of **Your** Contract (including sales tax).	$ $10,000.00

EHB 2805 (RCW 39.04.370) – Is the Prime Contractor's contract at a cost of over one million dollars ($1,000,000)? ☒ No ☐ Yes

If "Yes" to the **EHB 2805** question and the Award Date is **9/1/2010** or later you must complete and submit the **EHB 2805 (RCW 39.04.370) Addendum**.

ARRA Funds	Weatherization or Energy Efficient Funds
Does this project utilize American Recovery and Reinvestment Act (ARRA) funds? ☐ Yes ☒ No	Does this project utilize any weatherization or energy efficiency upgrade funds (ARRA or otherwise)? ☐ Yes ☒ No

Prime Contractor's Company Information		Hiring Contractor's Company Information	
Prime Contractor's Company Name XYZ Company		Hiring Contractor's Company Name CBA Company	
Prime Contractor's Registration Number XYZCI*0123AA	Prime Contractor's UBI Number 987654321	Hiring Contractor's Registration Number CBACI*0123AA	Hiring Contractor's UBI Number 456789123

Employment Information

Did you use **ANY** subcontractors?	☐ Yes (**Addendum B Required**)	☒ No	Did employees perform work on this project?	☒ Yes	☐ No
Was **ALL** work subcontracted?	☐ Yes (**Addendum B Required**)	☒ No	Did you use apprentice employees?	☐ Yes	☒ No

Number of Owner/Operators who own at least 30% of the company who performed work on this project: ☐ None (0) ☒ One (1) ☐ Two (2) ☐ Three (3)
You must list the First and Last Name(s) of any Owner/Operator performing work below

List your Crafts/Trades/Occupations Below - For Journey Level Workers you must provide all of the information below. Owner/Operators - must provide their First and Last name no other information required. ****Apprentices are not recorded below. You must use Addendum D to list Apprentices.**	**Number of Workers**	**Total # of Hours Worked**	**Rate of Hourly Pay**	**Rate of Hourly Usual ("Fringe") Benefits**
General Labor	**2**	**153**	**41.23**	**8.54**
Carpenter	**5**	**210**	**52.26**	**10.13**

Signature Block

I hereby certify that I have read and understand the instructions to complete this form and that the information on the form and any addenda is correct and that all workers I employed on this Public Works Project were paid no less than the Prevailing Wage Rate(s) as determined by the Industrial Statistician of the Department of Labor and Industries.

Print Name:	Print Title:	Signature:	Date:

For L&I Use Only

Department of Labor and Industries
APPROVED BY: _____
Industrial Statistician

F700-007-000 Affidavit of Wages Paid

SAMPLE

© RH2 Engineering, Inc., 2023

Department of Labor & Industries
Prevailing Wage Program
P.O. Box 44540
Olympia, Washington 98504-4540
Phone (360) 902-5335 / Fax (360) 902-5300

INSTRUCTIONS AFFIDAVIT OF WAGES PAID FOR PUBLIC WORKS CONTRACTS

COMPLETE ALL FIELDS ON THE FORM

The numbered blocks in the following instructions correspond to the numbered blocks on the numbered Affidavit of Wages Paid above. In addition, a completed sample form (without numbers) is included at the end of these instructions.

1 **Your Company Information –** Enter the following information:

a) Your **Company Name** and **Address**.

b) Your **Contractor Registration Number** – You can verify this number at: http://www.lni.wa.gov/TradesLicensing/Contractors/HireCon/

c) Your **UBI Number** (Unified Business Identifier) – This 9-digit number registers you with several state agencies and allows you to do business in Washington. You can verify this number at: http://www.bls.dor.wa.gov/LicenseSearch/

d) Your **Industrial Insurance Account Number** – You can verify this number at: https://fortress.wa.gov/lni/crpsi/MainMenu.aspx?MessageId=2001

e) Please provide your **Email Address** so that L&I can notify you of form approval and/or any required corrections. If you do not provide this information, L&I will use standard mail to send you correction notices. You can access approved forms at: https://fortress.wa.gov/lni/wagelookup/searchforms.aspx

f) No notice of approval will be mailed.

g) Your company **Phone Number**.

2 **Awarding Agency Information –** Enter the following information regarding the agency that awarded the contract. This information is available from the Prime Contractor:

a) **Project Name** – This is the name the Awarding Agency assigned to the project.

b) **Contract Number** – This is the number the Awarding Agency assigned to the project.

c) **Awarding Agency** – This is the name of the agency that awarded the contract.

d) Please enter the **Street Address**, **City**, **State** and **Zip+4** of the Awarding Agency.

e) **Awarding Agency Contact Name and Phone Number** – Enter the name and phone number of the person the Prime Contractor communicates with at the Awarding Agency.

f) **County Where Work Was Performed** – Enter the name of the county where the work was performed. If the work was performed in multiple counties, include the names of all counties where work was performed.

g) **City Where Work Was Performed –** Enter the name of the city where the work was performed. If the work was performed outside the limits of any city, or in multiple cities, include the name of the nearest city.

3 **Additional Details**

a) **Your Job Start Date –** This is the date that you began work on the project.

b) **Your Date Work Completed** – This is the date you completed work on the project. You cannot have a date in the future.

c) **Job Site Address/Directions –** Enter the specific address of the project or provide brief details regarding the location of the site, if no specific address exists.

d) **Your Approved Intent ID #** – Enter the 6-digit number, assigned by L&I, from the approved Intent form filed for this project.

F700-007-000 Affidavit of Wages Paid

© RH2 Engineering, Inc., 2023

INSTRUCTIONS (Cont.)

4	**Contract Details** a) **Bid Due Date** – Enter the date the **Prime Contractor** had to submit a bid to the Awarding Agency for this project (mm/dd/yyyy). • **What if my contract was not bid?** – If the contract you are working under was not required to be bid, you will enter the date the contract was awarded. b) **Award Date** – This is the date the Awarding Agency awarded the contract to the Prime Contractor (mm/dd/yyyy). c) **Indicate the Total Dollar Amount of Your Contract –** Enter the total amount of **your** contract, including the applicable sales tax. You must enter the final amount of your contract. You cannot enter Time and Materials on an Affidavit of Wages Paid.
5	**EHB 2805 (RCW 39.04.370) -** F700-164-000 is an addendum to your Affidavit of Wages Paid Form. RCW 39.04.370 requires you to complete form F700-164-000 for contracts entered into between September 1, 2010 and December 31, 2013 if the Prime's contract is at a cost of over one million dollars ($1,000,000). If you fail to properly provide the requested information more than one time between September 1, 2010 and December 31, 2013, pursuant to RCW 39.04.350(1)(f) you will not be considered a responsible bidder qualified to be awarded a public works project. Use as many of these forms as you need in order to provide the requested information for all relevant project items. This is an addendum to form F700-007-000.
6	**ARRA & Weatherization Funding Questions –** Enter the information regarding the source of funds. This information should be obtained from the Awarding Agency or the Prime Contractor. a) Does this project utilize American Recovery and Reinvestment Act (ARRA) funds? b) Does this project utilize any weatherization or energy efficiency upgrade funds (ARRA or otherwise)?
7	**Prime Contractor's Company Information** – Enter information about the contractor who has the direct contract with the Awarding Agency: a) **Prime Contractor's Company Name** – Enter the Prime Contractor's company name. b) **Prime Contractor's Registration Number** – Enter the Contractor Registration Number for the Prime Contractor. You can verify the number at: https://fortress.wa.gov/lni/bbip/Search.aspx. c) **Prime Contractor's UBI Number** – Enter the UBI number for the Prime Contractor. You can verify this number at: https://fortress.wa.gov/dol/dolprod/bpdLicenseQuery/.
8	**Hiring Contractor's Company Information** – Enter the information about the Hiring Contractor. This is the contractor who hired or contracted your firm to perform work on this project: a) **Hiring Contractor's Company Name** – Enter the name of the contractor who hired or contracted your firm to perform work on this project. b) **Hiring Contractor's Registration Number** – Enter the Contractor Registration Number for the contractor who hired you. You can verify the number at: https://fortress.wa.gov/lni/bbip/Search.aspx. c) **Hiring Contractor's UBI Number** – Enter the UBI Number for the contractor who hired you. You can verify this number at: https://fortress.wa.gov/dol/dolprod/bpdLicenseQuery/.

© RH2 Engineering, Inc., 2023

9

Employment Information – Enter information about the individuals who performed work on this project:

a) **Did you use any subcontractors? -** If **PART** of the work was performed by subcontractors you hired, check the "Yes" box and complete **Addendum B**.

b) **Did employees perform work on this project? -** If employees, including apprentices, performed any work on the project, check the "Yes" box and list each employee's applicable craft/trade/occupation. If you utilized apprentices on this project you must complete **Addendum D**.

NOTICE: If no employees performed work subject to Washington's prevailing wage requirements, check no on this question, and your form may be submitted without payment. For more information, see our website at http://www.lni.wa.gov/TradesLicensing/PrevWage/IntentAffidavits/File/default.asp

c) **Was ALL work subcontracted? -** If **ALL** work was performed by subcontractors, check the "Yes" box and complete **Addendum B**.

d) **Did you use apprentice employees?** – If you used apprentices on this project please be aware:

1. Any workers **NOT** registered with the Washington State Apprenticeship and Training Council (WSATC) must be paid the correct journey-level prevailing rate of wage.
2. Any apprentice **NOT** registered with the WSATC within 60 days of hiring must be paid at the correct journey-level prevailing rate of wage for the time preceding the date of registration.
3. You **MUST** be a registered training agent with the WSATC in order to pay a registered apprentice less than journey-level prevailing rate of wage.
4. To verify apprenticeship and/or registered training agent status call (360) 902-5324.

e) **Number of Owners/Operators who own at least 30% of the company who performed work on the project** – Indicate the number of Owners/Operators who performed work on the project. If no 30%+ Owners/Operators performed work on the project, check the box "None".

F700-007-000 Affidavit of Wages Paid

© RH2 Engineering, Inc., 2023

10 **Crafts/Trades/Occupations and Apprentices** – List the craft/trade/occupation of each worker, journey-level and apprentice, employed on this project.

❖ **Crafts/Trades/Occupations**

If you indicated above that Owners/Operators worked on this project, and you also indicated above that no employees performed work on the project, and that **ALL** work was subcontracted, then you do not need to fill in this section. Individuals who own less than 30% of the company are not considered Owner/Operators under RCW 39.12 and must be listed as employees and paid at least the prevailing rate of wage for the work performed

Use **Addendum A** for additional Crafts/Trades/Occupations that will not fit on this form.

Residential Construction - If you are using any residential classifications (e.g. Residential Carpenter, Residential Laborer, etc.) you must provide information regarding the following questions, on **Addendum C**, in order for L&I to determine if residential rates are being utilized appropriately:

1. Did the Awarding Agency, in compliance with RCW 39.12.030, determine that the project meets the definition of residential construction?
2. Please indicate the type of structure (e.g. single-family dwelling, duplex, apartment, condominium or other residential structure).
3. Including any basement or garage, how many stories or levels does the structure have?
4. What is the facility used for (answer "yes" or "no" to each of the following options)?:
    a. Permanent residence only?
    b. Rehabilitation house?
    c. Transitional housing?
    d. Communal dining facility?
    e. Treatment services?
    f. Counseling?
    g. Other?
5. Does each dwelling unit have its own full, self-contained kitchen?
6. Does each dwelling unit have its own full bathroom?
7. Is there a community facility or manager's office on site?
8. Is any part of the facility used by members of the public?

Landscape Construction - If you are using "Landscape Construction" or any of the sub-classifications within Landscape Construction (e.g. Landscape or Planting Laborer, Irrigation or Lawn Sprinkler Installers, Landscape Equipment Operators or Truck Drivers) you must provide information regarding the following questions, on **Addendum C**, in order for L&I to determine if Landscape Construction rates are being utilized appropriately:

1. The beautification of a plot of land through addition of or modification to lawns, trees and bushes under the Landscape Construction Scope of work (WAC 296-127-01346) is a limited universe and has exclusions that may affect its application. Please provide L&I with more information so we can verify whether the landscape construction wage rates apply to this project.
    a. Please describe the whole project – not just your part.
    b. Please describe your part(s) of the project –the tasks you performed, equipment used, and tools used. Please provide as much detail as you can.
    c. If the project involves installing an irrigation system, trenching, installing French drains or other subsurface water collection systems, or spreading top soil or mulch, please tell us the relevant depths.
2. If Equipment Operators and/or Truck Drivers were used, describe the type, and list the size or rated capacity of the equipment.

F700-007-000 Affidavit of Wages Paid 06-2014

© RH2 Engineering, Inc., 2023

	Crafts/Trades/Occupations and Apprentices (Cont.) **Apprentices** – If you employed apprentices on this project, list each apprentice by Name, Registration Number, Trade, the number of hours the individual had completed in the program when they started work (Beginning Hours) and ended work (Ending Hours) on the project, Beginning and Ending dates of work performed on this project, and Rate of Hourly Pay and Usual ("Fringe") Benefits. 1. Any workers **NOT** registered with the Washington State Apprenticeship and Training Council (WSATC) must be paid the correct journey-level prevailing rate of wage. 2. Any apprentice **NOT** registered with the WSATC within 60 days of hiring must be paid at the correct journey-level prevailing rate of wage for the time preceding the date of registration. 3. You **MUST** be a registered training agent with the WSATC in order to pay a registered apprentice less than journey-level prevailing rate of wage. 4. To verify apprenticeship and/or registered training agent status call (360) 902-5366.
11	**Number of Workers** – Enter the number of journey-level workers employed on this project for that craft/trade/occupation.
12	**Total Number of Hours Worked** – Enter the number of hours worked for that Craft/Trade/Occupation.
13	**Rate of Hourly Pay** – Enter the rate of hourly pay, as defined by RCW 39.12.010, that you actually paid the workers for that Craft/Trade/Occupation. The amount listed for "Rate of Hourly Pay" plus the amount listed for the "Rate of Hourly Fringe Benefits," if any, must equal or exceed the applicable prevailing rate of wage.
14	**Rate of Hourly Usual ("Fringe") Benefits** – Enter the rate of hourly fringe benefits for that Craft/Trade/Occupation. This is the cost of fringe benefits, as defined by RCW 39.12.010, that you actually paid to the workers. The amount listed for "Rate of Hourly Pay" plus the amount listed for "Rate of Hourly Usual ("Fringe") Benefits," if any, must equal or exceed the applicable prevailing rate of wage.

If there is not enough space to list all required information on one form, use the appropriate Addendum as needed. No additional fee is required for using Addendums to the form. No other attachments will be accepted.

L&I approval of your Affidavit of Wages Paid is based on the information you provide. Approval of the form does not signify that the classifications of labor you listed on the form are the correct classifications of work for the tasks performed on the public works project. It is your responsibility to pay workers the prevailing rate of wage for the classification of work that correctly applies to the actual work they perform.

Be sure to include your email address on the form. If you do not provide this information, L&I will use standard mail to send you correction notices. You will be able to access approved forms at: https://fortress.wa.gov/lni/wagelookup/searchforms.aspx

MAILING INSTRUCTIONS

*You must mail the completed and signed form with **original signature** (a photocopy of a signature will **not** be accepted) with the $40 filing fee, if applicable*, to:*

Management Services
Department of Labor & Industries
Prevailing Wage Program
PO Box 44835
Olympia, WA 98504-4835

FURTHER INFORMATION

Make checks payable to:

Department of Labor and Industries

*If you have questions or would like assistance in completing the form, please call us at **(360) 902-5335** or email the Prevailing Wage office at pw1@Lni.wa.gov.*

Prevailing wage rates are available on the Internet at:
http://www.lni.wa.gov/TradesLicensing/PrevWage/WageRates/default.asp
(No notice of approval will be mailed).

F700-007-000 Affidavit of Wages Paid

© RH2 Engineering, Inc., 2023

REQUEST FOR RELEASE

Department of Labor and Industries
General Administration Building
Olympia, WA 98504

The undersigned Contractor requests that the property Owner/General Contractor be notified of their release from liability for industrial insurance premiums on the following work:

Name of Project	Contract No.

Location of Project

Description of Work

Amount of contract	Date Work Started	Date Work Completed	Property Owner/General Contractor

Address of Property Owner/General Contractor

Were Subcontractors Used?

Yes ☐ No ☐

IF YES, ATTACH A LIST SHOWING NAME, ADDRESS, CURRENT CONTRACTOR REGISTRATION NO., INDUSTRIAL INSURANCE ACCOUNT NO., NATURE OF WORK PERFORMED, AND COMPLETION DATE. SUPPLIERS FOR MATERIALS ONLY ARE NOT TO BE INCLUDED.

This Request Submitted by	☐ General Contractor ☐ Subcontractor	Date	Industrial Insurance Account #
Name of Firm		Signed	
Address		Title	

ALL WORKER HOURS THROUGH THE COMPLETION DATE OF THIS PROJECT MUST HAVE BEEN REPORTED AND PREMIUM PAID THEREON BEFORE A RELEASE WILL BE ISSUED.

THIS FORM MUST BE COMPLETED AND ALL INFORMATION FURNISHED BY PARTY REQUESTING RELEASE. SEND TO DEPARTMENT OF LABOR AND INDUSTRIES, INDUSTRIAL INSURANCE DIVISION, CONTRACT COMPLIANCE UNIT, OLYMPIA, WA 98504.

© RH2 Engineering, Inc., 2023

State of Washington
Department of Labor & Industries
Prevailing Wage Section - Telephone 360-902-5335
PO Box 44540, Olympia, WA 98504-4540

Washington State Prevailing Wage

The PREVAILING WAGES listed here include both the hourly wage rate and the hourly rate of fringe benefits. On public works projects, worker's wage and benefit rates must add to not less than this total. A brief description of overtime calculation requirements are provided on the Benefit Code Key.

Journey Level Prevailing Wage Rates for the Effective Date: 1/10/2024

County	Trade	Job Classification	Wage	Holiday	Overtime	Note	*Risk Class
Pierce	Asbestos Abatement Workers	Journey Level	$59.07	5D	1H		View
Pierce	Boilermakers	Journey Level	$74.29	5N	1C		View
Pierce	Brick Mason	Journey Level	$69.07	7E	1N		View
Pierce	Brick Mason	Pointer-Caulker-Cleaner	$69.07	7E	1N		View
Pierce	Building Service Employees	Janitor	$22.29	5S	2F		View
Pierce	Building Service Employees	Traveling Waxer / Shampooer	$23.24	5S	2F		View
Pierce	Building Service Employees	Window Cleaner (High Time)	$31.24	5S	2F		View
Pierce	Building Service Employees	Window Cleaner (Non-High Time)	$29.74	5S	2F		View
Pierce	Cabinet Makers (In Shop)	Journey Level	$28.36		1		View
Pierce	Carpenters	Acoustical Worker	$74.96	15J	4C		View
Pierce	Carpenters	Bridge, Dock And Wharf Carpenters	$74.96	15J	4C		View
Pierce	Carpenters	Floor Layer & Floor Finisher	$74.96	15J	4C		View
Pierce	Carpenters	Journey Level	$74.96	15J	4C		View
Pierce	Carpenters	Scaffold Erector	$74.96	15J	4C		View
Pierce	Cement Masons	Application of all Composition Mastic	$72.87	15J	4U		View
Pierce	Cement Masons	Application of all Epoxy Material	$72.37	15J	4U		View
Pierce	Cement Masons	Application of all Plastic Material	$72.87	15J	4U		View
Pierce	Cement Masons	Application of Sealing Compound	$72.37	15J	4U		View
Pierce	Cement Masons	Application of Underlayment	$72.87	15J	4U		View
Pierce	Cement Masons	Building General	$72.37	15J	4U		View
Pierce	Cement Masons	Composition or Kalman Floors	$72.87	15J	4U		View
Pierce	Cement Masons	Concrete Paving	$72.37	15J	4U		View
Pierce	Cement Masons	Curb & Gutter Machine	$72.87	15J	4U		View
Pierce	Cement Masons	Curb & Gutter, Sidewalks	$72.37	15J	4U		View
Pierce	Cement Masons	Curing Concrete	$72.37	15J	4U		View

Pierce	Cement Masons	Finish Colored Concrete	$72.87	15J	4U		View
Pierce	Cement Masons	Floor Grinding	$72.87	15J	4U		View
Pierce	Cement Masons	Floor Grinding/Polisher	$72.37	15J	4U		View
Pierce	Cement Masons	Green Concrete Saw, self-powered	$72.87	15J	4U		View
Pierce	Cement Masons	Grouting of all Plates	$72.37	15J	4U		View
Pierce	Cement Masons	Grouting of all Tilt-up Panels	$72.37	15J	4U		View
Pierce	Cement Masons	Gunite Nozzleman	$72.87	15J	4U		View
Pierce	Cement Masons	Hand Powered Grinder	$72.87	15J	4U		View
Pierce	Cement Masons	Journey Level	$72.37	15J	4U		View
Pierce	Cement Masons	Patching Concrete	$72.37	15J	4U		View
Pierce	Cement Masons	Pneumatic Power Tools	$72.87	15J	4U		View
Pierce	Cement Masons	Power Chipping & Brushing	$72.87	15J	4U		View
Pierce	Cement Masons	Sand Blasting Architectural Finish	$72.87	15J	4U		View
Pierce	Cement Masons	Screed & Rodding Machine	$72.87	15J	4U		View
Pierce	Cement Masons	Spackling or Skim Coat Concrete	$72.37	15J	4U		View
Pierce	Cement Masons	Troweling Machine Operator	$72.87	15J	4U		View
Pierce	Cement Masons	Troweling Machine Operator on Colored Slabs	$72.87	15J	4U		View
Pierce	Cement Masons	Tunnel Workers	$72.87	15J	4U		View
Pierce	Divers & Tenders	Bell/Vehicle or Submersible Operator (Not Under Pressure)	$129.71	15J	4C		View
Pierce	Divers & Tenders	Dive Supervisor/Master	$93.94	15J	4C		View
Pierce	Divers & Tenders	Diver	$129.71	15J	4C	8V	View
Pierce	Divers & Tenders	Diver On Standby	$88.94	15J	4C		View
Pierce	Divers & Tenders	Diver Tender	$80.82	15J	4C		View
Pierce	Divers & Tenders	Hyperbaric Worker - Compressed Air Worker 0-30.00 PSI	$93.26	15J	4C		View
Pierce	Divers & Tenders	Hyperbaric Worker - Compressed Air Worker 30.01 - 44.00 PSI	$98.26	15J	4C		View
Pierce	Divers & Tenders	Hyperbaric Worker - Compressed Air Worker 44.01 - 54.00 PSI	$102.26	15J	4C		View
Pierce	Divers & Tenders	Hyperbaric Worker - Compressed Air Worker 54.01 - 60.00 PSI	$107.26	15J	4C		View
Pierce	Divers & Tenders	Hyperbaric Worker - Compressed Air Worker 60.01 - 64.00 PSI	$109.76	15J	4C		View
Pierce	Divers & Tenders	Hyperbaric Worker - Compressed Air Worker 64.01 - 68.00 PSI	$114.76	15J	4C		View
Pierce	Divers & Tenders	Hyperbaric Worker - Compressed Air Worker 68.01 - 70.00 PSI	$116.76	15J	4C		View
Pierce	Divers & Tenders	Hyperbaric Worker - Compressed Air Worker 70.01 -	$118.76	15J	4C		View

		72.00 PSI					
Pierce	Divers & Tenders	Hyperbaric Worker - Compressed Air Worker 72.01 - 74.00 PSI	$120.76	15J	4C		View
Pierce	Divers & Tenders	Manifold Operator	$80.82	15J	4C		View
Pierce	Divers & Tenders	Manifold Operator Mixed Gas	$85.82	15J	4C		View
Pierce	Divers & Tenders	Remote Operated Vehicle Operator/Technician	$80.82	15J	4C		View
Pierce	Divers & Tenders	Remote Operated Vehicle Tender	$75.41	15J	4C		View
Pierce	Dredge Workers	Assistant Engineer	$79.62	5D	3F		View
Pierce	Dredge Workers	Assistant Mate (Deckhand)	$79.01	5D	3F		View
Pierce	Dredge Workers	Boatmen	$79.62	5D	3F		View
Pierce	Dredge Workers	Engineer Welder	$81.15	5D	3F		View
Pierce	Dredge Workers	Leverman, Hydraulic	$82.77	5D	3F		View
Pierce	Dredge Workers	Mates	$79.62	5D	3F		View
Pierce	Dredge Workers	Oiler	$79.01	5D	3F		View
Pierce	Drywall Applicator	Journey Level	$74.96	15J	4C		View
Pierce	Drywall Tapers	Journey Level	$74.50	5P	1E		View
Pierce	Electrical Fixture Maintenance Workers	Journey Level	$17.76		1		View
Pierce	Electricians - Inside	Cable Splicer	$88.45	5C	1G		View
Pierce	Electricians - Inside	Journey Level	$82.57	5C	1G		View
Pierce	Electricians - Inside	Lead Covered Cable Splicer	$94.34	5C	1G		View
Pierce	Electricians - Inside	Welder	$88.45	5C	1G		View
Pierce	Electricians - Motor Shop	Craftsman	$15.74		1		View
Pierce	Electricians - Motor Shop	Journey Level	$15.74		1		View
Pierce	Electricians - Powerline Construction	Cable Splicer	$93.00	5A	4D		View
Pierce	Electricians - Powerline Construction	Certified Line Welder	$85.42	5A	4D		View
Pierce	Electricians - Powerline Construction	Groundperson	$55.27	5A	4D		View
Pierce	Electricians - Powerline Construction	Heavy Line Equipment Operator	$85.42	5A	4D		View
Pierce	Electricians - Powerline Construction	Journey Level Lineperson	$85.42	5A	4D		View
Pierce	Electricians - Powerline Construction	Line Equipment Operator	$73.35	5A	4D		View
Pierce	Electricians - Powerline Construction	Meter Installer	$55.27	5A	4D	8W	View
Pierce	Electricians - Powerline Construction	Pole Sprayer	$85.42	5A	4D		View
Pierce	Electricians - Powerline Construction	Powderperson	$63.50	5A	4D		View
Pierce	Electronic Technicians	Journey Level	$53.46	6Z	1B		View
Pierce	Elevator Constructors	Mechanic	$107.49	7D	4A		View
Pierce	Elevator Constructors	Mechanic In Charge	$116.13	7D	4A		View
Pierce	Fabricated Precast Concrete Products	Journey Level	$15.74		1		View

Pierce	Fence Erectors	Fence Erector	$50.07	15J	11P	8Y	View
Pierce	Fence Erectors	Fence Laborer	$50.07	15J	11P	8Y	View
Pierce	Flaggers	Journey Level	$50.07	15J	11P	8Y	View
Pierce	Glaziers	Journey Level	$79.16	7L	1Y		View
Pierce	Heat & Frost Insulators And Asbestos Workers	Journey Level	$87.15	15H	11C		View
Pierce	Heating Equipment Mechanics	Journey Level	$96.42	7F	1E		View
Pierce	Hod Carriers & Mason Tenders	Journey Level	$62.49	15J	11P	8Y	View
Pierce	Industrial Power Vacuum Cleaner	Journey Level	$15.74		1		View
Pierce	Inland Boatmen	Boat Operator	$61.41	5B	1K		View
Pierce	Inland Boatmen	Cook	$56.48	5B	1K		View
Pierce	Inland Boatmen	Deckhand	$57.48	5B	1K		View
Pierce	Inland Boatmen	Deckhand Engineer	$58.81	5B	1K		View
Pierce	Inland Boatmen	Launch Operator	$58.89	5B	1K		View
Pierce	Inland Boatmen	Mate	$57.31	5B	1K		View
Pierce	Inspection/Cleaning/Sealing Of Sewer & Water Systems By Remote Control	Cleaner Operator, Foamer Operator	$15.74		1		View
Pierce	Inspection/Cleaning/Sealing Of Sewer & Water Systems By Remote Control	Grout Truck Operator	$15.74		1		View
Pierce	Inspection/Cleaning/Sealing Of Sewer & Water Systems By Remote Control	Head Operator	$15.74		1		View
Pierce	Inspection/Cleaning/Sealing Of Sewer & Water Systems By Remote Control	Technician	$15.74		1		View
Pierce	Inspection/Cleaning/Sealing Of Sewer & Water Systems By Remote Control	Tv Truck Operator	$15.74		1		View
Pierce	Insulation Applicators	Journey Level	$74.96	15J	4C		View
Pierce	Ironworkers	Journeyman	$85.80	15K	11N		View
Pierce	Laborers	Air, Gas Or Electric Vibrating Screed	$59.07	15J	11P	8Y	View
Pierce	Laborers	Airtrac Drill Operator	$60.90	15J	11P	8Y	View
Pierce	Laborers	Ballast Regular Machine	$59.07	15J	11P	8Y	View
Pierce	Laborers	Batch Weighman	$50.07	15J	11P	8Y	View
Pierce	Laborers	Brick Pavers	$59.07	15J	11P	8Y	View
Pierce	Laborers	Brush Cutter	$59.07	15J	11P	8Y	View
Pierce	Laborers	Brush Hog Feeder	$59.07	15J	11P	8Y	View
Pierce	Laborers	Burner	$59.07	15J	11P	8Y	View
Pierce	Laborers	Caisson Worker	$60.90	15J	11P	8Y	View
Pierce	Laborers	Carpenter Tender	$59.07	15J	11P	8Y	View
Pierce	Laborers	Cement Dumper-paving	$60.15	15J	11P	8Y	View
Pierce	Laborers	Cement Finisher Tender	$59.07	15J	11P	8Y	View
Pierce	Laborers	Change House Or Dry Shack	$59.07	15J	11P	8Y	View
Pierce	Laborers	Chipping Gun (30 Lbs. And Over)	$60.15	15J	11P	8Y	View
Pierce	Laborers	Chipping Gun (Under 30 Lbs.)	$59.07	15J	11P	8Y	View

Pierce	Laborers	Choker Setter	$59.07	15J	11P	8Y	View
Pierce	Laborers	Chuck Tender	$59.07	15J	11P	8Y	View
Pierce	Laborers	Clary Power Spreader	$60.15	15J	11P	8Y	View
Pierce	Laborers	Clean-up Laborer	$59.07	15J	11P	8Y	View
Pierce	Laborers	Concrete Dumper/Chute Operator	$60.15	15J	11P	8Y	View
Pierce	Laborers	Concrete Form Stripper	$59.07	15J	11P	8Y	View
Pierce	Laborers	Concrete Placement Crew	$60.15	15J	11P	8Y	View
Pierce	Laborers	Concrete Saw Operator/Core Driller	$60.15	15J	11P	8Y	View
Pierce	Laborers	Crusher Feeder	$50.07	15J	11P	8Y	View
Pierce	Laborers	Curing Laborer	$59.07	15J	11P	8Y	View
Pierce	Laborers	Demolition: Wrecking & Moving (Incl. Charred Material)	$59.07	15J	11P	8Y	View
Pierce	Laborers	Ditch Digger	$59.07	15J	11P	8Y	View
Pierce	Laborers	Diver	$60.90	15J	11P	8Y	View
Pierce	Laborers	Drill Operator (Hydraulic, Diamond)	$60.15	15J	11P	8Y	View
Pierce	Laborers	Dry Stack Walls	$59.07	15J	11P	8Y	View
Pierce	Laborers	Dump Person	$59.07	15J	11P	8Y	View
Pierce	Laborers	Epoxy Technician	$59.07	15J	11P	8Y	View
Pierce	Laborers	Erosion Control Worker	$59.07	15J	11P	8Y	View
Pierce	Laborers	Faller & Bucker Chain Saw	$60.15	15J	11P	8Y	View
Pierce	Laborers	Fine Graders	$59.07	15J	11P	8Y	View
Pierce	Laborers	Firewatch	$50.07	15J	11P	8Y	View
Pierce	Laborers	Form Setter	$60.15	15J	11P	8Y	View
Pierce	Laborers	Gabian Basket Builders	$59.07	15J	11P	8Y	View
Pierce	Laborers	General Laborer	$59.07	15J	11P	8Y	View
Pierce	Laborers	Grade Checker & Transit Person	$62.49	15J	11P	8Y	View
Pierce	Laborers	Grinders	$59.07	15J	11P	8Y	View
Pierce	Laborers	Grout Machine Tender	$59.07	15J	11P	8Y	View
Pierce	Laborers	Groutmen (Pressure) Including Post Tension Beams	$60.15	15J	11P	8Y	View
Pierce	Laborers	Guardrail Erector	$59.07	15J	11P	8Y	View
Pierce	Laborers	Hazardous Waste Worker (Level A)	$60.90	15J	11P	8Y	View
Pierce	Laborers	Hazardous Waste Worker (Level B)	$60.15	15J	11P	8Y	View
Pierce	Laborers	Hazardous Waste Worker (Level C)	$59.07	15J	11P	8Y	View
Pierce	Laborers	High Scaler	$60.90	15J	11P	8Y	View
Pierce	Laborers	Jackhammer	$60.15	15J	11P	8Y	View
Pierce	Laborers	Laserbeam Operator	$60.15	15J	11P	8Y	View
Pierce	Laborers	Maintenance Person	$59.07	15J	11P	8Y	View
Pierce	Laborers	Manhole Builder-Mudman	$60.15	15J	11P	8Y	View
Pierce	Laborers	Material Yard Person	$59.07	15J	11P	8Y	View
Pierce	Laborers	Mold Abatement Worker	$59.07	15J	11P	8Y	View
Pierce	Laborers	Motorman-Dinky Locomotive	$62.59	15J	11P	8Y	View

Pierce	Laborers	nozzleman (concrete pump, green cutter when using combination of high pressure air & water on concrete & rock, sandblast, gunite, shotcrete, water blaster, vacuum blaster)	$62.49	15J	11P	8Y	View
Pierce	Laborers	Pavement Breaker	$60.15	15J	11P	8Y	View
Pierce	Laborers	Pilot Car	$50.07	15J	11P	8Y	View
Pierce	Laborers	Pipe Layer (Lead)	$62.49	15J	11P	8Y	View
Pierce	Laborers	Pipe Layer/Tailor	$60.15	15J	11P	8Y	View
Pierce	Laborers	Pipe Pot Tender	$60.15	15J	11P	8Y	View
Pierce	Laborers	Pipe Reliner	$60.15	15J	11P	8Y	View
Pierce	Laborers	Pipe Wrapper	$60.15	15J	11P	8Y	View
Pierce	Laborers	Pot Tender	$59.07	15J	11P	8Y	View
Pierce	Laborers	Powderman	$60.90	15J	11P	8Y	View
Pierce	Laborers	Powderman's Helper	$59.07	15J	11P	8Y	View
Pierce	Laborers	Power Jacks	$60.15	15J	11P	8Y	View
Pierce	Laborers	Railroad Spike Puller - Power	$60.15	15J	11P	8Y	View
Pierce	Laborers	Raker - Asphalt	$62.49	15J	11P	8Y	View
Pierce	Laborers	Re-timberman	$60.90	15J	11P	8Y	View
Pierce	Laborers	Remote Equipment Operator	$60.15	15J	11P	8Y	View
Pierce	Laborers	Rigger/Signal Person	$60.15	15J	11P	8Y	View
Pierce	Laborers	Rip Rap Person	$59.07	15J	11P	8Y	View
Pierce	Laborers	Rivet Buster	$60.15	15J	11P	8Y	View
Pierce	Laborers	Rodder	$60.15	15J	11P	8Y	View
Pierce	Laborers	Scaffold Erector	$59.07	15J	11P	8Y	View
Pierce	Laborers	Scale Person	$59.07	15J	11P	8Y	View
Pierce	Laborers	Sloper (Over 20")	$60.15	15J	11P	8Y	View
Pierce	Laborers	Sloper Sprayer	$59.07	15J	11P	8Y	View
Pierce	Laborers	Spreader (Concrete)	$60.15	15J	11P	8Y	View
Pierce	Laborers	Stake Hopper	$59.07	15J	11P	8Y	View
Pierce	Laborers	Stock Piler	$59.07	15J	11P	8Y	View
Pierce	Laborers	Swinging Stage/Boatswain Chair	$50.07	15J	11P	8Y	View
Pierce	Laborers	Tamper & Similar Electric, Air & Gas Operated Tools	$60.15	15J	11P	8Y	View
Pierce	Laborers	Tamper (Multiple & Self-propelled)	$60.15	15J	11P	8Y	View
Pierce	Laborers	Timber Person - Sewer (Lagger, Shorer & Cribber)	$60.15	15J	11P	8Y	View
Pierce	Laborers	Toolroom Person (at Jobsite)	$59.07	15J	11P	8Y	View
Pierce	Laborers	Topper	$59.07	15J	11P	8Y	View
Pierce	Laborers	Track Laborer	$59.07	15J	11P	8Y	View
Pierce	Laborers	Track Liner (Power)	$60.15	15J	11P	8Y	View
Pierce	Laborers	Traffic Control Laborer	$53.54	15J	11P	9C	View
Pierce	Laborers	Traffic Control Supervisor	$56.73	15J	11P	9C	View
Pierce	Laborers	Truck Spotter	$59.07	15J	11P	8Y	View
Pierce	Laborers	Tugger Operator	$60.15	15J	11P	8Y	View

Pierce	Laborers	Tunnel Work-Compressed Air Worker 0-30 psi	$175.79	15J	11P	9B	View
Pierce	Laborers	Tunnel Work-Compressed Air Worker 30.01-44.00 psi	$180.82	15J	11P	9B	View
Pierce	Laborers	Tunnel Work-Compressed Air Worker 44.01-54.00 psi	$184.50	15J	11P	9B	View
Pierce	Laborers	Tunnel Work-Compressed Air Worker 54.01-60.00 psi	$190.20	15J	11P	9B	View
Pierce	Laborers	Tunnel Work-Compressed Air Worker 60.01-64.00 psi	$192.32	15J	11P	9B	View
Pierce	Laborers	Tunnel Work-Compressed Air Worker 64.01-68.00 psi	$197.42	15J	11P	9B	View
Pierce	Laborers	Tunnel Work-Compressed Air Worker 68.01-70.00 psi	$199.32	15J	11P	9B	View
Pierce	Laborers	Tunnel Work-Compressed Air Worker 70.01-72.00 psi	$201.32	15J	11P	9B	View
Pierce	Laborers	Tunnel Work-Compressed Air Worker 72.01-74.00 psi	$203.32	15J	11P	9B	View
Pierce	Laborers	Tunnel Work-Guage and Lock Tender	$62.59	15J	11P	8Y	View
Pierce	Laborers	Tunnel Work-Miner	$62.59	15J	11P	8Y	View
Pierce	Laborers	Vibrator	$60.15	15J	11P	8Y	View
Pierce	Laborers	Vinyl Seamer	$59.07	15J	11P	8Y	View
Pierce	Laborers	Watchman	$45.51	15J	11P	8Y	View
Pierce	Laborers	Welder	$60.15	15J	11P	8Y	View
Pierce	Laborers	Well Point Laborer	$60.15	15J	11P	8Y	View
Pierce	Laborers	Window Washer/Cleaner	$45.51	15J	11P	8Y	View
Pierce	Laborers - Underground Sewer & Water	General Laborer & Topman	$59.07	15J	11P	8Y	View
Pierce	Laborers - Underground Sewer & Water	Pipe Layer	$60.15	15J	11P	8Y	View
Pierce	Landscape Construction	Landscape Construction/Landscaping Or Planting Laborers	$45.51	15J	11P	8Y	View
Pierce	Landscape Construction	Landscape Operator	$79.01	15J	3K	8X	View
Pierce	Landscape Maintenance	Groundskeeper	$17.07		1		View
Pierce	Lathers	Journey Level	$74.96	15J	4C		View
Pierce	Marble Setters	Journey Level	$69.07	7E	1N		View
Pierce	Metal Fabrication (In Shop)	Fitter	$15.74		1		View
Pierce	Metal Fabrication (In Shop)	Laborer	$15.74		1		View
Pierce	Metal Fabrication (In Shop)	Machine Operator	$15.74		1		View
Pierce	Metal Fabrication (In Shop)	Welder	$15.74		1		View
Pierce	Millwright	Journey Level	$76.51	15J	4C		View
Pierce	Modular Buildings	Journey Level	$15.74		1		View
Pierce	Painters	Journey Level	$51.71	6Z	11J		View
Pierce	Pile Driver	Crew Tender	$80.82	15J	4C		View
Pierce	Pile Driver	Journey Level	$75.41	15J	4C		View
Pierce	Plasterers	Journey Level	$70.91	7Q	1R		View
Pierce	Plasterers	Nozzleman	$74.91	7Q	1R		View

Pierce	Playground & Park Equipment Installers	Journey Level	$15.74		1		View
Pierce	Plumbers & Pipefitters	Journey Level	$85.72	5A	1G		View
Pierce	Power Equipment Operators	Asphalt Plant Operator	$80.33	15J	3K	8X	View
Pierce	Power Equipment Operators	Assistant Engineer	$78.95	7A	11H	8X	View
Pierce	Power Equipment Operators	Barrier Machine (zipper)	$79.62	15J	3K	8X	View
Pierce	Power Equipment Operators	Batch Plant Operator: Concrete	$79.62	15J	3K	8X	View
Pierce	Power Equipment Operators	Bobcat	$75.57	15J	3K	8X	View
Pierce	Power Equipment Operators	Brokk - Remote Demolition Equipment	$75.57	15J	3K	8X	View
Pierce	Power Equipment Operators	Brooms	$75.57	15J	3K	8X	View
Pierce	Power Equipment Operators	Bump Cutter	$79.62	15J	3K	8X	View
Pierce	Power Equipment Operators	Cableways	$80.33	15J	3K	8X	View
Pierce	Power Equipment Operators	Chipper	$79.62	15J	3K	8X	View
Pierce	Power Equipment Operators	Compressor	$75.57	15J	3K	8X	View
Pierce	Power Equipment Operators	Concrete Pump: Truck Mount With Boom Attachment Over 42m	$80.33	15J	3K	8X	View
Pierce	Power Equipment Operators	Concrete Finish Machine -laser Screed	$75.57	15J	3K	8X	View
Pierce	Power Equipment Operators	Concrete Pump - Mounted Or Trailer High Pressure Line Pump, Pump High Pressure	$79.01	15J	3K	8X	View
Pierce	Power Equipment Operators	Concrete Pump: Truck Mount With Boom Attachment Up To 42m	$79.62	15J	3K	8X	View
Pierce	Power Equipment Operators	Conveyors	$79.01	15J	3K	8X	View
Pierce	Power Equipment Operators	Cranes Friction: 200 tons and over	$86.48	7A	11H	8X	View
Pierce	Power Equipment Operators	Cranes, A-frame: 10 tons and under	$78.95	7A	11H	8X	View
Pierce	Power Equipment Operators	Cranes: 100 tons through 199 tons, or 150' of boom (including jib with attachments)	$84.77	7A	11H	8X	View
Pierce	Power Equipment Operators	Cranes: 20 tons through 44 tons with attachments	$83.20	7A	11H	8X	View
Pierce	Power Equipment Operators	Cranes: 200 tons- 299 tons, or 250' of boom including jib with attachments	$85.66	7A	11H	8X	View
Pierce	Power Equipment Operators	Cranes: 300 tons and over or 300' of boom including jib with attachments	$86.48	7A	11H	8X	View
Pierce	Power Equipment Operators	Cranes: 45 tons through 99 tons, under 150' of boom(including jib with attachments)	$83.95	7A	11H	8X	View
Pierce	Power Equipment Operators	Cranes: Friction cranes through 199 tons	$85.66	7A	11H	8X	View
Pierce	Power Equipment Operators	Cranes: through 19 tons with attachments, A-frame over 10 tons	$82.56	7A	11H	8X	View

Pierce	Power Equipment Operators	Crusher	$79.62	15J	3K	8X	View
Pierce	Power Equipment Operators	Deck Engineer/deck Winches (power)	$79.62	15J	3K	8X	View
Pierce	Power Equipment Operators	Derricks: on building work	$83.95	7A	11H	8X	View
Pierce	Power Equipment Operators	Dozers D-9 & Under	$79.01	15J	3K	8X	View
Pierce	Power Equipment Operators	Drill Oilers: Auger Type, Truck Or Crane Mount	$79.01	15J	3K	8X	View
Pierce	Power Equipment Operators	Drilling Machine	$81.15	15J	3K	8X	View
Pierce	Power Equipment Operators	Elevator and man-lift: permanent and shaft type	$78.95	7A	11H	8X	View
Pierce	Power Equipment Operators	Finishing Machine, Bidwell And Gamaco & Similar Equipment	$79.62	15J	3K	8X	View
Pierce	Power Equipment Operators	Forklift: 3000 lbs and over with attachments	$82.56	7A	11H	8X	View
Pierce	Power Equipment Operators	Forklifts: under 3000 lbs. with attachments	$78.95	7A	11H	8X	View
Pierce	Power Equipment Operators	Grade Engineer: Using Blueprints, Cut Sheets,etc.	$79.62	15J	3K	8X	View
Pierce	Power Equipment Operators	Gradechecker/stakeman	$75.57	15J	3K	8X	View
Pierce	Power Equipment Operators	Guardrail punch/Auger	$79.62	15J	3K	8X	View
Pierce	Power Equipment Operators	Hard Tail End Dump Articulating Off- Road Equipment 45 Yards. & Over	$80.33	15J	3K	8X	View
Pierce	Power Equipment Operators	Hard Tail End Dump Articulating Off-road Equipment Under 45 Yards	$79.62	15J	3K	8X	View
Pierce	Power Equipment Operators	Horizontal/directional Drill Locator	$79.01	15J	3K	8X	View
Pierce	Power Equipment Operators	Horizontal/directional Drill Operator	$79.62	15J	3K	8X	View
Pierce	Power Equipment Operators	Hydralifts/boom trucks: 10 tons and under	$78.95	7A	11H	8X	View
Pierce	Power Equipment Operators	Hydralifts/boom trucks: over 10 tons	$82.56	7A	11H	8X	View
Pierce	Power Equipment Operators	Loader, Overhead 8 Yards. & Over	$81.15	15J	3K	8X	View
Pierce	Power Equipment Operators	Loader, Overhead, 6 Yards. But Not Including 8 Yards	$80.33	15J	3K	8X	View
Pierce	Power Equipment Operators	Loaders, Overhead Under 6 Yards	$79.62	15J	3K	8X	View
Pierce	Power Equipment Operators	Loaders, Plant Feed	$79.62	15J	3K	8X	View
Pierce	Power Equipment Operators	Loaders: Elevating Type Belt	$79.01	15J	3K	8X	View
Pierce	Power Equipment Operators	Locomotives, All	$79.62	15J	3K	8X	View
Pierce	Power Equipment Operators	Material Transfer Device	$79.62	15J	3K	8X	View
Pierce	Power Equipment Operators	Mechanics: all (Leadmen - $0.50 per hour over mechanic)	$84.77	7A	11H	8X	View
Pierce	Power Equipment Operators	Motor patrol graders	$80.33	15J	3K	8X	View
Pierce	Power Equipment Operators	Mucking Machine, Mole, Tunnel Drill, Boring, Road Header And/or Shield	$80.33	15J	3K	8X	View
Pierce	Power Equipment Operators	Oil Distributors, Blower Distribution & Mulch Seeding	$75.57	15J	3K	8X	View

		Operator					
Pierce	Power Equipment Operators	Outside Hoists (elevators and manlifts), Air Tuggers, Strato	$82.56	7A	11H	8X	View
Pierce	Power Equipment Operators	Overhead, bridge type Crane: 20 tons through 44 tons	$83.20	7A	11H	8X	View
Pierce	Power Equipment Operators	Overhead, bridge type: 100 tons and over	$84.77	7A	11H	8X	View
Pierce	Power Equipment Operators	Overhead, bridge type: 45 tons through 99 tons	$83.95	7A	11H	8X	View
Pierce	Power Equipment Operators	Pavement Breaker	$75.57	15J	3K	8X	View
Pierce	Power Equipment Operators	Pile Driver (other Than Crane Mount)	$79.62	15J	3K	8X	View
Pierce	Power Equipment Operators	Plant Oiler - Asphalt, Crusher	$79.01	15J	3K	8X	View
Pierce	Power Equipment Operators	Posthole Digger, Mechanical	$75.57	15J	3K	8X	View
Pierce	Power Equipment Operators	Power Plant	$75.57	15J	3K	8X	View
Pierce	Power Equipment Operators	Pumps - Water	$75.57	15J	3K	8X	View
Pierce	Power Equipment Operators	Quad 9, HD 41, D10 And Over	$80.33	15J	3K	8X	View
Pierce	Power Equipment Operators	Quick Tower: no cab, under 100 feet in height based to boom	$78.95	7A	11H	8X	View
Pierce	Power Equipment Operators	Remote Control Operator On Rubber Tired Earth Moving Equipment	$80.33	15J	3K	8X	View
Pierce	Power Equipment Operators	Rigger and Bellman	$78.95	7A	11H	8X	View
Pierce	Power Equipment Operators	Rigger/Signal Person, Bellman(Certified)	$82.56	7A	11H	8X	View
Pierce	Power Equipment Operators	Rollagon	$80.33	15J	3K	8X	View
Pierce	Power Equipment Operators	Roller, Other Than Plant Mix	$75.57	15J	3K	8X	View
Pierce	Power Equipment Operators	Roller, Plant Mix Or Multi-lift Materials	$79.01	15J	3K	8X	View
Pierce	Power Equipment Operators	Roto-mill, Roto-grinder	$79.62	15J	3K	8X	View
Pierce	Power Equipment Operators	Saws - Concrete	$79.01	15J	3K	8X	View
Pierce	Power Equipment Operators	Scraper, Self Propelled Under 45 Yards	$79.62	15J	3K	8X	View
Pierce	Power Equipment Operators	Scrapers - Concrete & Carry All	$79.01	15J	3K	8X	View
Pierce	Power Equipment Operators	Scrapers, Self-propelled: 45 Yards And Over	$80.33	15J	3K	8X	View
Pierce	Power Equipment Operators	Service Engineers: equipment	$82.56	7A	11H	8X	View
Pierce	Power Equipment Operators	Shotcrete/gunite Equipment	$75.57	15J	3K	8X	View
Pierce	Power Equipment Operators	Shovel, Excavator, Backhoe, Tractors Under 15 Metric Tons	$79.01	15J	3K	8X	View
Pierce	Power Equipment Operators	Shovel, Excavator, Backhoe: Over 30 Metric Tons To 50 Metric Tons	$80.33	15J	3K	8X	View
Pierce	Power Equipment Operators	Shovel, Excavator, Backhoes, Tractors: 15 To 30 Metric Tons	$79.62	15J	3K	8X	View
Pierce	Power Equipment Operators	Shovel, Excavator, Backhoes: Over 50 Metric Tons To 90 Metric Tons	$81.15	15J	3K	8X	View
Pierce	Power Equipment Operators	Shovel, Excavator, Backhoes: Over 90 Metric Tons	$81.96	15J	3K	8X	View

Pierce	Power Equipment Operators	Slipform Pavers	$80.33	15J	3K	8X	View
Pierce	Power Equipment Operators	Spreader, Topsider & Screedman	$80.33	15J	3K	8X	View
Pierce	Power Equipment Operators	Subgrader Trimmer	$79.62	15J	3K	8X	View
Pierce	Power Equipment Operators	Tower Bucket Elevators	$79.01	15J	3K	8X	View
Pierce	Power Equipment Operators	Tower Crane: over 175' through 250' in height, base to boom	$85.66	7A	11H	8X	View
Pierce	Power Equipment Operators	Tower crane: up to 175' in height base to boom	$84.77	7A	11H	8X	View
Pierce	Power Equipment Operators	Tower Cranes: over 250' in height from base to boom.	$86.48	7A	11H	8X	View
Pierce	Power Equipment Operators	Transporters, All Track Or Truck Type	$80.33	15J	3K	8X	View
Pierce	Power Equipment Operators	Trenching Machines	$79.01	15J	3K	8X	View
Pierce	Power Equipment Operators	Truck Crane Oiler/Driver: 100 tons and over	$83.20	7A	11H	8X	View
Pierce	Power Equipment Operators	Truck crane oiler/driver: under 100 tons	$82.56	7A	11H	8X	View
Pierce	Power Equipment Operators	Truck Mount Portable Conveyor	$79.62	15J	3K	8X	View
Pierce	Power Equipment Operators	Vac Truck (Vactor Guzzler, Hydro Excavator)	$79.62	15J	3K	8X	View
Pierce	Power Equipment Operators	Welder	$83.95	7A	11H	8X	View
Pierce	Power Equipment Operators	Wheel Tractors, Farmall Type	$75.57	15J	3K	8X	View
Pierce	Power Equipment Operators	Yo Yo Pay Dozer	$79.62	15J	3K	8X	View
Pierce	Power Equipment Operators-Underground Sewer & Water	Asphalt Plant Operator	$80.33	15J	3K	8X	View
Pierce	Power Equipment Operators-Underground Sewer & Water	Assistant Engineer	$78.95	7A	11H	8X	View
Pierce	Power Equipment Operators-Underground Sewer & Water	Barrier Machine (zipper)	$79.62	15J	3K	8X	View
Pierce	Power Equipment Operators-Underground Sewer & Water	Batch Plant Operator: Concrete	$79.62	15J	3K	8X	View
Pierce	Power Equipment Operators-Underground Sewer & Water	Bobcat	$75.57	15J	3K	8X	View
Pierce	Power Equipment Operators-Underground Sewer & Water	Brokk - Remote Demolition Equipment	$75.57	15J	3K	8X	View
Pierce	Power Equipment Operators-Underground Sewer & Water	Brooms	$75.57	15J	3K	8X	View
Pierce	Power Equipment Operators-Underground Sewer & Water	Bump Cutter	$79.62	15J	3K	8X	View
Pierce	Power Equipment Operators-Underground Sewer & Water	Cableways	$80.33	15J	3K	8X	View
Pierce	Power Equipment Operators-Underground Sewer & Water	Chipper	$79.62	15J	3K	8X	View
Pierce	Power Equipment Operators-Underground Sewer & Water	Compressor	$75.57	15J	3K	8X	View
Pierce	Power Equipment Operators-Underground Sewer & Water	Concrete Pump: Truck Mount With Boom Attachment Over 42m	$80.33	15J	3K	8X	View
Pierce	Power Equipment Operators-Underground Sewer & Water	Concrete Finish Machine -laser Screed	$75.57	15J	3K	8X	View

Pierce	Power Equipment Operators-Underground Sewer & Water	Concrete Pump - Mounted Or Trailer High Pressure Line Pump, Pump High Pressure	$79.01	15J	3K	8X	View
Pierce	Power Equipment Operators-Underground Sewer & Water	Concrete Pump: Truck Mount With Boom Attachment Up To 42m	$79.62	15J	3K	8X	View
Pierce	Power Equipment Operators-Underground Sewer & Water	Conveyors	$79.01	15J	3K	8X	View
Pierce	Power Equipment Operators-Underground Sewer & Water	Cranes Friction: 200 tons and over	$86.48	7A	11H	8X	View
Pierce	Power Equipment Operators-Underground Sewer & Water	Cranes, A-frame: 10 tons and under	$78.95	7A	11H	8X	View
Pierce	Power Equipment Operators-Underground Sewer & Water	Cranes: 100 tons through 199 tons, or 150' of boom (including jib with attachments)	$84.77	7A	11H	8X	View
Pierce	Power Equipment Operators-Underground Sewer & Water	Cranes: 20 tons through 44 tons with attachments	$83.20	7A	11H	8X	View
Pierce	Power Equipment Operators-Underground Sewer & Water	Cranes: 200 tons- 299 tons, or 250' of boom including jib with attachments	$85.66	7A	11H	8X	View
Pierce	Power Equipment Operators-Underground Sewer & Water	Cranes: 300 tons and over or 300' of boom including jib with attachments	$86.48	7A	11H	8X	View
Pierce	Power Equipment Operators-Underground Sewer & Water	Cranes: 45 tons through 99 tons, under 150' of boom(including jib with attachments)	$83.95	7A	11H	8X	View
Pierce	Power Equipment Operators-Underground Sewer & Water	Cranes: Friction cranes through 199 tons	$85.66	7A	11H	8X	View
Pierce	Power Equipment Operators-Underground Sewer & Water	Cranes: through 19 tons with attachments, A-frame over 10 tons	$82.56	7A	11H	8X	View
Pierce	Power Equipment Operators-Underground Sewer & Water	Crusher	$79.62	15J	3K	8X	View
Pierce	Power Equipment Operators-Underground Sewer & Water	Deck Engineer/deck Winches (power)	$79.62	15J	3K	8X	View
Pierce	Power Equipment Operators-Underground Sewer & Water	Derricks: on building work	$83.95	7A	11H	8X	View
Pierce	Power Equipment Operators-Underground Sewer & Water	Dozers D-9 & Under	$79.01	15J	3K	8X	View
Pierce	Power Equipment Operators-Underground Sewer & Water	Drill Oilers: Auger Type, Truck Or Crane Mount	$79.01	15J	3K	8X	View
Pierce	Power Equipment Operators-Underground Sewer & Water	Drilling Machine	$81.15	15J	3K	8X	View
Pierce	Power Equipment Operators-Underground Sewer & Water	Elevator and man-lift: permanent and shaft type	$78.95	7A	11H	8X	View
Pierce	Power Equipment Operators-Underground Sewer & Water	Finishing Machine, Bidwell And Gamaco & Similar Equipment	$79.62	15J	3K	8X	View
Pierce	Power Equipment Operators-Underground Sewer & Water	Forklift: 3000 lbs and over with attachments	$82.56	7A	11H	8X	View
Pierce	Power Equipment Operators-Underground Sewer & Water	Forklifts: under 3000 lbs. with attachments	$78.95	7A	11H	8X	View

Pierce	Power Equipment Operators-Underground Sewer & Water	Grade Engineer: Using Blueprints, Cut Sheets,etc.	$79.62	15J	3K	8X	View
Pierce	Power Equipment Operators-Underground Sewer & Water	Gradechecker/stakeman	$75.57	15J	3K	8X	View
Pierce	Power Equipment Operators-Underground Sewer & Water	Guardrail punch/Auger	$79.62	15J	3K	8X	View
Pierce	Power Equipment Operators-Underground Sewer & Water	Hard Tail End Dump Articulating Off- Road Equipment 45 Yards. & Over	$80.33	15J	3K	8X	View
Pierce	Power Equipment Operators-Underground Sewer & Water	Hard Tail End Dump Articulating Off-road Equipment Under 45 Yards	$79.62	15J	3K	8X	View
Pierce	Power Equipment Operators-Underground Sewer & Water	Horizontal/directional Drill Locator	$79.01	15J	3K	8X	View
Pierce	Power Equipment Operators-Underground Sewer & Water	Horizontal/directional Drill Operator	$79.62	15J	3K	8X	View
Pierce	Power Equipment Operators-Underground Sewer & Water	Hydralifts/boom trucks: 10 tons and under	$78.95	7A	11H	8X	View
Pierce	Power Equipment Operators-Underground Sewer & Water	Hydralifts/boom trucks: over 10 tons	$82.56	7A	11H	8X	View
Pierce	Power Equipment Operators-Underground Sewer & Water	Loader, Overhead 8 Yards. & Over	$81.15	15J	3K	8X	View
Pierce	Power Equipment Operators-Underground Sewer & Water	Loader, Overhead, 6 Yards. But Not Including 8 Yards	$80.33	15J	3K	8X	View
Pierce	Power Equipment Operators-Underground Sewer & Water	Loaders, Overhead Under 6 Yards	$79.62	15J	3K	8X	View
Pierce	Power Equipment Operators-Underground Sewer & Water	Loaders, Plant Feed	$79.62	15J	3K	8X	View
Pierce	Power Equipment Operators-Underground Sewer & Water	Loaders: Elevating Type Belt	$79.01	15J	3K	8X	View
Pierce	Power Equipment Operators-Underground Sewer & Water	Locomotives, All	$79.62	15J	3K	8X	View
Pierce	Power Equipment Operators-Underground Sewer & Water	Material Transfer Device	$79.62	15J	3K	8X	View
Pierce	Power Equipment Operators-Underground Sewer & Water	Mechanics: all (Leadmen - $0.50 per hour over mechanic)	$84.77	7A	11H	8X	View
Pierce	Power Equipment Operators-Underground Sewer & Water	Motor patrol graders	$80.33	15J	3K	8X	View
Pierce	Power Equipment Operators-Underground Sewer & Water	Mucking Machine, Mole, Tunnel Drill, Boring, Road Header And/or Shield	$80.33	15J	3K	8X	View
Pierce	Power Equipment Operators-Underground Sewer & Water	Oil Distributors, Blower Distribution & Mulch Seeding Operator	$75.57	15J	3K	8X	View
Pierce	Power Equipment Operators-Underground Sewer & Water	Outside Hoists (elevators and manlifts), Air Tuggers, Strato	$82.56	7A	11H	8X	View
Pierce	Power Equipment Operators-Underground Sewer & Water	Overhead, bridge type Crane: 20 tons through 44 tons	$83.20	7A	11H	8X	View
Pierce	Power Equipment Operators-Underground Sewer & Water	Overhead, bridge type: 100 tons and over	$84.77	7A	11H	8X	View
Pierce	Power Equipment Operators-Underground Sewer & Water	Overhead, bridge type: 45 tons through 99 tons	$83.95	7A	11H	8X	View

Pierce	Power Equipment Operators-Underground Sewer & Water	Pavement Breaker	$75.57	15J	3K	8X	View
Pierce	Power Equipment Operators-Underground Sewer & Water	Pile Driver (other Than Crane Mount)	$79.62	15J	3K	8X	View
Pierce	Power Equipment Operators-Underground Sewer & Water	Plant Oiler - Asphalt, Crusher	$79.01	15J	3K	8X	View
Pierce	Power Equipment Operators-Underground Sewer & Water	Posthole Digger, Mechanical	$75.57	15J	3K	8X	View
Pierce	Power Equipment Operators-Underground Sewer & Water	Power Plant	$75.57	15J	3K	8X	View
Pierce	Power Equipment Operators-Underground Sewer & Water	Pumps - Water	$75.57	15J	3K	8X	View
Pierce	Power Equipment Operators-Underground Sewer & Water	Quad 9, HD 41, D10 And Over	$80.33	15J	3K	8X	View
Pierce	Power Equipment Operators-Underground Sewer & Water	Quick Tower: no cab, under 100 feet in height based to boom	$78.95	7A	11H	8X	View
Pierce	Power Equipment Operators-Underground Sewer & Water	Remote Control Operator On Rubber Tired Earth Moving Equipment	$80.33	15J	3K	8X	View
Pierce	Power Equipment Operators-Underground Sewer & Water	Rigger and Bellman	$78.95	7A	11H	8X	View
Pierce	Power Equipment Operators-Underground Sewer & Water	Rigger/Signal Person, Bellman(Certified)	$82.56	7A	11H	8X	View
Pierce	Power Equipment Operators-Underground Sewer & Water	Rollagon	$80.33	15J	3K	8X	View
Pierce	Power Equipment Operators-Underground Sewer & Water	Roller, Other Than Plant Mix	$75.57	15J	3K	8X	View
Pierce	Power Equipment Operators-Underground Sewer & Water	Roller, Plant Mix Or Multi-lift Materials	$79.01	15J	3K	8X	View
Pierce	Power Equipment Operators-Underground Sewer & Water	Roto-mill, Roto-grinder	$79.62	15J	3K	8X	View
Pierce	Power Equipment Operators-Underground Sewer & Water	Saws - Concrete	$79.01	15J	3K	8X	View
Pierce	Power Equipment Operators-Underground Sewer & Water	Scraper, Self Propelled Under 45 Yards	$79.62	15J	3K	8X	View
Pierce	Power Equipment Operators-Underground Sewer & Water	Scrapers - Concrete & Carry All	$79.01	15J	3K	8X	View
Pierce	Power Equipment Operators-Underground Sewer & Water	Scrapers, Self-propelled: 45 Yards And Over	$80.33	15J	3K	8X	View
Pierce	Power Equipment Operators-Underground Sewer & Water	Service Engineers: equipment	$82.56	7A	11H	8X	View
Pierce	Power Equipment Operators-Underground Sewer & Water	Shotcrete/gunite Equipment	$75.57	15J	3K	8X	View
Pierce	Power Equipment Operators-Underground Sewer & Water	Shovel, Excavator, Backhoe, Tractors Under 15 Metric Tons	$79.01	15J	3K	8X	View
Pierce	Power Equipment Operators-Underground Sewer & Water	Shovel, Excavator, Backhoe: Over 30 Metric Tons To 50 Metric Tons	$80.33	15J	3K	8X	View
Pierce	Power Equipment Operators-Underground Sewer & Water	Shovel, Excavator, Backhoes, Tractors: 15 To 30 Metric Tons	$79.62	15J	3K	8X	View
Pierce	Power Equipment Operators-Underground Sewer & Water	Shovel, Excavator, Backhoes: Over 50 Metric Tons To 90	$81.15	15J	3K	8X	View

		Metric Tons					
Pierce	Power Equipment Operators-Underground Sewer & Water	Slipform Pavers	$80.33	15J	3K	8X	View
Pierce	Power Equipment Operators-Underground Sewer & Water	Spreader, Topsider & Screedman	$80.33	15J	3K	8X	View
Pierce	Power Equipment Operators-Underground Sewer & Water	Subgrader Trimmer	$79.62	15J	3K	8X	View
Pierce	Power Equipment Operators-Underground Sewer & Water	Tower Bucket Elevators	$79.01	15J	3K	8X	View
Pierce	Power Equipment Operators-Underground Sewer & Water	Tower Crane: over 175' through 250' in height, base to boom	$85.66	7A	11H	8X	View
Pierce	Power Equipment Operators-Underground Sewer & Water	Tower crane: up to 175' in height base to boom	$84.77	7A	11H	8X	View
Pierce	Power Equipment Operators-Underground Sewer & Water	Tower Cranes: over 250' in height from base to boom.	$86.48	7A	11H	8X	View
Pierce	Power Equipment Operators-Underground Sewer & Water	Transporters, All Track Or Truck Type	$80.33	15J	3K	8X	View
Pierce	Power Equipment Operators-Underground Sewer & Water	Trenching Machines	$79.01	15J	3K	8X	View
Pierce	Power Equipment Operators-Underground Sewer & Water	Truck Crane Oiler/Driver: 100 tons and over	$83.20	7A	11H	8X	View
Pierce	Power Equipment Operators-Underground Sewer & Water	Truck crane oiler/driver: under 100 tons	$82.56	7A	11H	8X	View
Pierce	Power Equipment Operators-Underground Sewer & Water	Truck Mount Portable Conveyor	$79.62	15J	3K	8X	View
Pierce	Power Equipment Operators-Underground Sewer & Water	Vac Truck (Vactor Guzzler, Hydro Excavator)	$79.62	15J	3K	8X	View
Pierce	Power Equipment Operators-Underground Sewer & Water	Welder	$83.95	7A	11H	8X	View
Pierce	Power Equipment Operators-Underground Sewer & Water	Wheel Tractors, Farmall Type	$75.57	15J	3K	8X	View
Pierce	Power Equipment Operators-Underground Sewer & Water	Yo Yo Pay Dozer	$79.62	15J	3K	8X	View
Pierce	Power Line Clearance Tree Trimmers	Journey Level In Charge	$57.22	5A	4A		View
Pierce	Power Line Clearance Tree Trimmers	Spray Person	$54.32	5A	4A		View
Pierce	Power Line Clearance Tree Trimmers	Tree Equipment Operator	$57.22	5A	4A		View
Pierce	Power Line Clearance Tree Trimmers	Tree Trimmer	$51.18	5A	4A		View
Pierce	Power Line Clearance Tree Trimmers	Tree Trimmer Groundperson	$38.99	5A	4A		View
Pierce	Refrigeration & Air Conditioning Mechanics	Journey Level	$87.46	5A	1G		View
Pierce	Residential Brick Mason	Journey Level	$27.02		1		View
Pierce	Residential Carpenters	Journey Level	$49.93	15J	4C		View
Pierce	Residential Cement Masons	Journey Level	$45.99		1		View
Pierce	Residential Drywall Applicators	Journey Level	$74.96	15J	4C		View
Pierce	Residential Drywall Tapers	Journey Level	$74.50	5P	1E		View
Pierce	Residential Electricians	Journey Level	$44.11		1		View
Pierce	Residential Glaziers	Journey Level	$79.16	7L	1Y		View

Pierce	Residential Insulation Applicators	Journey Level	$24.52		1		View
Pierce	Residential Laborers	Journey Level	$33.97		1		View
Pierce	Residential Marble Setters	Journey Level	$29.29		1		View
Pierce	Residential Painters	Journey Level	$51.71	6Z	11J		View
Pierce	Residential Plumbers & Pipefitters	Journey Level	$85.72	5A	1G		View
Pierce	Residential Refrigeration & Air Conditioning Mechanics	Journey Level	$85.72	5A	1G		View
Pierce	Residential Sheet Metal Workers	Journey Level	$96.42	7F	1E		View
Pierce	Residential Soft Floor Layers	Journey Level	$57.11	5A	3J		View
Pierce	Residential Sprinkler Fitters (Fire Protection)	Journey Level	$58.26	5C	2R		View
Pierce	Residential Stone Masons	Journey Level	$29.29		1		View
Pierce	Residential Terrazzo Workers	Journey Level	$15.74		1		View
Pierce	Residential Terrazzo/Tile Finishers	Journey Level	$21.96		1		View
Pierce	Residential Tile Setters	Journey Level	$25.98		1		View
Pierce	Roofers	Journey Level	$60.90	5A	3H		View
Pierce	Roofers	Using Irritable Bituminous Materials	$63.90	5A	3H		View
Pierce	Sheet Metal Workers	Journey Level (Field or Shop)	$96.42	7F	1E		View
Pierce	Shipbuilding & Ship Repair	New Construction Boilermaker	$51.85	7X	4J		View
Pierce	Shipbuilding & Ship Repair	New Construction Carpenter	$51.85	7X	4J		View
Pierce	Shipbuilding & Ship Repair	New Construction Crane Operator	$41.83	7V	1		View
Pierce	Shipbuilding & Ship Repair	New Construction Electrician	$51.85	7X	4J		View
Pierce	Shipbuilding & Ship Repair	New Construction Heat & Frost Insulator	$87.15	15H	11C		View
Pierce	Shipbuilding & Ship Repair	New Construction Laborer	$51.85	7X	4J		View
Pierce	Shipbuilding & Ship Repair	New Construction Machinist	$51.85	7X	4J		View
Pierce	Shipbuilding & Ship Repair	New Construction Operating Engineer	$41.83	7V	1		View
Pierce	Shipbuilding & Ship Repair	New Construction Painter	$51.95	7X	4J		View
Pierce	Shipbuilding & Ship Repair	New Construction Pipefitter	$51.85	7X	4J		View
Pierce	Shipbuilding & Ship Repair	New Construction Rigger	$51.85	7X	4J		View
Pierce	Shipbuilding & Ship Repair	New Construction Sheet Metal	$51.85	7X	4J		View
Pierce	Shipbuilding & Ship Repair	New Construction Shipwright	$51.85	7X	4J		View
Pierce	Shipbuilding & Ship Repair	New Construction Warehouse/Teamster	$41.83	7V	1		View
Pierce	Shipbuilding & Ship Repair	New Construction Welder / Burner	$51.85	7X	4J		View
Pierce	Shipbuilding & Ship Repair	Ship Repair Boilermaker	$51.85	7X	4J		View
Pierce	Shipbuilding & Ship Repair	Ship Repair Carpenter	$51.85	7X	4J		View
Pierce	Shipbuilding & Ship Repair	Ship Repair Crane Operator	$45.06	7Y	4K		View
Pierce	Shipbuilding & Ship Repair	Ship Repair Electrician	$51.85	7X	4J		View
Pierce	Shipbuilding & Ship Repair	Ship Repair Heat & Frost Insulator	$87.15	15H	11C		View

Pierce	Shipbuilding & Ship Repair	Ship Repair Laborer	$51.85	7X	4J		View
Pierce	Shipbuilding & Ship Repair	Ship Repair Machinist	$51.85	7X	4J		View
Pierce	Shipbuilding & Ship Repair	Ship Repair Operating Engineer	$45.06	7Y	4K		View
Pierce	Shipbuilding & Ship Repair	Ship Repair Painter	$51.95	7X	4J		View
Pierce	Shipbuilding & Ship Repair	Ship Repair Pipefitter	$51.85	7X	4J		View
Pierce	Shipbuilding & Ship Repair	Ship Repair Rigger	$51.85	7X	4J		View
Pierce	Shipbuilding & Ship Repair	Ship Repair Sheet Metal	$51.85	7X	4J		View
Pierce	Shipbuilding & Ship Repair	Ship Repair Shipwright	$51.85	7X	4J		View
Pierce	Shipbuilding & Ship Repair	Ship Repair Warehouse / Teamster	$45.06	7Y	4K		View
Pierce	Sign Makers & Installers (Electrical)	Sign Installer	$26.17		1		View
Pierce	Sign Makers & Installers (Electrical)	Sign Maker	$20.33		1		View
Pierce	Sign Makers & Installers (Non-Electrical)	Sign Installer	$33.43		1		View
Pierce	Sign Makers & Installers (Non-Electrical)	Sign Maker	$22.79		1		View
Pierce	Soft Floor Layers	Journey Level	$66.32	15J	4C		View
Pierce	Solar Controls For Windows	Journey Level	$15.74		1		View
Pierce	Sprinkler Fitters (Fire Protection)	Journey Level	$93.99	5C	1X		View
Pierce	Stage Rigging Mechanics (Non Structural)	Journey Level	$15.74		1		View
Pierce	Stone Masons	Journey Level	$69.07	7E	1N		View
Pierce	Street And Parking Lot Sweeper Workers	Journey Level	$21.69		1		View
Pierce	Surveyors	Assistant Construction Site Surveyor	$82.56	7A	11H	8X	View
Pierce	Surveyors	Chainman	$78.95	7A	11H	8X	View
Pierce	Surveyors	Construction Site Surveyor	$83.95	7A	11H	8X	View
Pierce	Surveyors	Drone Operator (when used in conjunction with surveying work only)	$78.95	7A	11H	8X	View
Pierce	Surveyors	Ground Penetrating Radar	$78.95	7A	11H	8X	View
Pierce	Telecommunication Technicians	Journey Level	$53.46	6Z	1B		View
Pierce	Telephone Line Construction - Outside	Cable Splicer	$40.11	5A	2B		View
Pierce	Telephone Line Construction - Outside	Hole Digger/Ground Person	$26.67	5A	2B		View
Pierce	Telephone Line Construction - Outside	Telephone Equipment Operator (Light)	$33.49	5A	2B		View
Pierce	Telephone Line Construction - Outside	Telephone Lineperson	$37.90	5A	2B		View
Pierce	Terrazzo Workers	Journey Level	$62.36	7E	1N		View
Pierce	Tile Setters	Journey Level	$62.36	7E	1N		View
Pierce	Tile, Marble & Terrazzo Finishers	Finisher	$53.19	7E	1N		View
Pierce	Traffic Control Stripers	Journey Level	$89.54	15L	1K		View
Pierce	Truck Drivers	Asphalt Mix Over 16 Yards	$74.95	15J	11M	8L	View

Pierce	Truck Drivers	Asphalt Mix To 16 Yards	$74.02	15J	11M	8L	View
Pierce	Truck Drivers	Dump Truck	$74.02	15J	11M	8L	View
Pierce	Truck Drivers	Dump Truck & Trailer	$74.95	15J	11M	8L	View
Pierce	Truck Drivers	Other Trucks	$74.95	15J	11M	8L	View
Pierce	Truck Drivers - Ready Mix	Transit Mix	$74.95	15J	11M	8L	View
Pierce	Well Drillers & Irrigation Pump Installers	Irrigation Pump Installer	$16.09		1		View
Pierce	Well Drillers & Irrigation Pump Installers	Oiler	$15.74		1		View
Pierce	Well Drillers & Irrigation Pump Installers	Well Driller	$18.30		1		View

****

Overtime Codes

Overtime calculations are based on the hourly rate actually paid to the worker. On public works projects, the hourly rate must be not less than the prevailing rate of wage minus the hourly rate of the cost of fringe benefits actually provided for the worker.

1. ALL HOURS WORKED IN EXCESS OF EIGHT (8) HOURS PER DAY OR FORTY (40) HOURS PER WEEK SHALL BE PAID AT ONE AND ONE-HALF TIMES THE HOURLY RATE OF WAGE.

B. All hours worked on Saturdays shall be paid at one and one-half times the hourly rate of wage. All hours worked on Sundays and holidays shall be paid at double the hourly rate of wage.

C. The first two (2) hours after eight (8) regular hours Monday through Friday and the first ten (10) hours on Saturday shall be paid at one and one-half times the hourly rate of wage. All other overtime hours and all hours worked on Sundays and holidays shall be paid at double the hourly rate of wage.

D. The first two (2) hours before or after a five-eight (8) hour workweek day or a four-ten (10) hour workweek day and the first eight (8) hours worked the next day after either workweek shall be paid at one and one-half times the hourly rate of wage. All additional hours worked and all worked on Sundays and holidays shall be paid at double the hourly rate of wage.

E. The first two (2) hours after eight (8) regular hours Monday through Friday and the first eight (8) hours on Saturday shall be paid at one and one-half times the hourly rate of wage. All other hours worked Monday through Saturday, and all hours worked on Sundays and holidays shall be paid at double the hourly rate of wage.

F. The first two (2) hours after eight (8) regular hours Monday through Friday and the first ten (10) hours on Saturday shall be paid at one and one-half times the hourly rate of wage. All other overtime hours worked, except Labor Day, shall be paid at double the hourly rate of wage. All hours worked on Labor Day shall be paid at three times the hourly rate of wage.

G. The first ten (10) hours worked on Saturdays and the first ten (10) hours worked on a fifth calendar weekday in a four-ten hour schedule, shall be paid at one and one-half times the hourly rate of wage. All hours worked in excess of ten (10) hours per day Monday through Saturday and all hours worked on Sundays and holidays shall be paid at double the hourly rate of wage.

H. All hours worked on Saturdays (except makeup days if work is lost due to inclement weather conditions or equipment breakdown) shall be paid at one and one-half times the hourly rate of wage. All hours worked Monday through Saturday over twelve (12) hours and all hours worked on Sundays and holidays shall be paid at double the hourly rate of wage.

I. All hours worked on Sundays and holidays shall also be paid at double the hourly rate of wage.

J. The first two (2) hours after eight (8) regular hours Monday through Friday and the first ten (10) hours on Saturday shall be paid at one and one-half times the hourly rate of wage. All hours worked over ten (10) hours Monday through Saturday, Sundays and holidays shall be paid at double the hourly rate of wage.

K. All hours worked on Saturdays and Sundays shall be paid at one and one-half times the hourly rate of wage. All hours worked on holidays shall be paid at double the hourly rate of wage.

M. All hours worked on Saturdays (except makeup days if work is lost due to inclement weather conditions) shall be paid at one and one-half times the hourly rate of wage. All hours worked on Sundays and holidays shall be paid at double the hourly rate of wage.

N. All hours worked on Saturdays (except makeup days) shall be paid at one and one-half times the hourly rate of wage. All hours worked on Sundays and holidays shall be paid at double the hourly rate of wage.

Overtime Codes Continued

1. O. The first ten (10) hours worked on Saturday shall be paid at one and one-half times the hourly rate of wage. All hours worked on Sundays, holidays and after twelve (12) hours, Monday through Friday and after ten (10) hours on Saturday shall be paid at double the hourly rate of wage.

P. All hours worked on Saturdays (except makeup days if circumstances warrant) and Sundays shall be paid at one and one-half times the hourly rate of wage. All hours worked on holidays shall be paid at double the hourly rate of wage.

Q. The first two (2) hours after eight (8) regular hours Monday through Friday and up to ten (10) hours worked on Saturdays shall be paid at one and one-half times the hourly rate of wage. All hours worked in excess of ten (10) hours per day Monday through Saturday and all hours worked on Sundays and holidays (except Christmas day) shall be paid at double the hourly rate of wage. All hours worked on Christmas day shall be paid at two and one-half times the hourly rate of wage.

R. All hours worked on Sundays and holidays shall be paid at two times the hourly rate of wage.

U. All hours worked on Saturdays shall be paid at one and one-half times the hourly rate of wage. All hours worked on Sundays and holidays (except Labor Day) shall be paid at two times the hourly rate of wage. All hours worked on Labor Day shall be paid at three times the hourly rate of wage.

V. All hours worked on Sundays and holidays (except Thanksgiving Day and Christmas day) shall be paid at one and one-half times the hourly rate of wage. All hours worked on Thanksgiving Day and Christmas day shall be paid at double the hourly rate of wage.

W. All hours worked on Saturdays and Sundays (except make-up days due to conditions beyond the control of the employer)) shall be paid at one and one-half times the hourly rate of wage. All hours worked on holidays shall be paid at double the hourly rate of wage.

X. The first four (4) hours after eight (8) regular hours Monday through Friday and the first twelve (12) hours on Saturday shall be paid at one and one-half times the hourly rate of wage. All hours worked over twelve (12) hours Monday through Saturday, Sundays and holidays shall be paid at double the hourly rate of wage. When holiday falls on Saturday or Sunday, the day before Saturday, Friday, and the day after Sunday, Monday, shall be considered the holiday and all work performed shall be paid at double the hourly rate of wage.

Y. All hours worked outside the hours of 5:00 am and 5:00 pm (or such other hours as may be agreed upon by any employer and the employee) and all hours worked in excess of eight (8) hours per day (10 hours per day for a 4 x 10 workweek) and on Saturdays and holidays (except labor day) shall be paid at one and one-half times the hourly rate of wage. (except for employees who are absent from work without prior approval on a scheduled workday during the workweek shall be paid at the straight-time rate until they have worked 8 hours in a day (10 in a 4 x 10 workweek) or 40 hours during that workweek.) All hours worked Monday through Saturday over twelve (12) hours and all hours worked on Sundays and Labor Day shall be paid at double the hourly rate of wage.

Z. All hours worked on Saturdays and Sundays shall be paid at one and one-half times the hourly rate of wage. All hours worked on holidays shall be paid the straight time rate of pay in addition to holiday pay.

Overtime Codes Continued

2. ALL HOURS WORKED IN EXCESS OF EIGHT (8) HOURS PER DAY OR FORTY (40) HOURS PER WEEK SHALL BE PAID AT ONE AND ONE-HALF TIMES THE HOURLY RATE OF WAGE.

   B. All hours worked on holidays shall be paid at one and one-half times the hourly rate of wage.

   F. The first eight (8) hours worked on holidays shall be paid at the straight hourly rate of wage in addition to the holiday pay. All hours worked in excess of eight (8) hours on holidays shall be paid at double the hourly rate of wage.

   M. This code appears to be missing. All hours worked on Saturdays, Sundays and holidays shall be paid at double the hourly rate of wage.

   R. All hours worked on Sundays and holidays and all hours worked over sixty (60) in one week shall be paid at double the hourly rate of wage.

   U. All hours worked on Saturdays shall be paid at one and one-half times the hourly rate of wage. All hours worked over 12 hours in a day or on Sundays and holidays shall be paid at double the hourly rate of wage.

3. ALL HOURS WORKED IN EXCESS OF EIGHT (8) HOURS PER DAY OR FORTY (40) HOURS PER WEEK SHALL BE PAID AT ONE AND ONE-HALF TIMES THE HOURLY RATE OF WAGE.

   F. All hours worked on Saturday shall be paid at one and one-half times the hourly rate of wage. All hours worked on Sunday shall be paid at two times the hourly rate of wage. All hours worked on paid holidays shall be paid at two and one-half times the hourly rate of wage including holiday pay.

   H. All work performed on Sundays between March 16th and October 14th and all Holidays shall be compensated for at two (2) times the regular rate of pay. Work performed on Sundays between October 15th and March 15th shall be compensated at one and one half (1-1/2) times the regular rate of pay.

   J. All hours worked between the hours of 10:00 pm and 5:00 am, Monday through Friday, and all hours worked on Saturdays shall be paid at a one and one-half times the hourly rate of wage. All hours worked on Sundays and holidays shall be paid at double the hourly rate of wage.

   K. Work performed in excess of eight (8) hours of straight time per day, or ten (10) hours of straight time per day when four ten (10) hour shifts are established, or forty (40) hours of straight time per week, Monday through Friday, or outside the normal 5 am to 6pm shift, and all work on Saturdays shall be paid at one and one-half times the hourly rate of wage. All work performed after 6:00 pm Saturday to 5:00 am Monday and Holidays, and all hours worked in excess of twelve (12) hours in a single shift shall be paid at double the hourly rate of wage.

   After an employee has worked eight (8) hours at an applicable overtime rate, all additional hours shall be at the applicable overtime rate until such time as the employee has had a break of eight (8) hours or more. When an employee returns to work without at least eight (8) hours time off since their previous shift, all such time shall be a continuation of shift and paid at the applicable overtime rate until he/she shall have the eight (8) hours rest period.

Overtime Codes Continued

4. ALL HOURS WORKED IN EXCESS OF EIGHT (8) HOURS PER DAY OR FORTY (40) HOURS PER WEEK SHALL BE PAID AT ONE AND ONE-HALF TIMES THE HOURLY RATE OF WAGE.

A. All hours worked in excess of eight (8) hours per day or forty (40) hours per week shall be paid at double the hourly rate of wage. All hours worked on Saturdays, Sundays and holidays shall be paid at double the hourly rate of wage

C. On Monday through Friday, the first four (4) hours of overtime after eight (8) hours of straight time work shall be paid at one and one half (1-1/2) times the straight time rate of pay, unless a four (4) day ten (10) hour workweek has been established. On a four (4) day ten (10) hour workweek scheduled Monday through Thursday, or Tuesday through Friday, the first two (2) hours of overtime after ten (10) hours of straight time work shall be paid at one and one half (1-1/2) times the straight time rate of pay. On Saturday, the first twelve (12) hours of work shall be paid at one and one half (1-1/2) times the straight time rate of pay, except that if the job is down on Monday through Friday due to weather conditions or other conditions outside the control of the employer, the first ten (10) hours on Saturday may be worked at the straight time rate of pay. All hours worked over twelve (12) hours in a day and all hours worked on Sunday and Holidays shall be paid at two (2) times the straight time rate of pay.

D. All hours worked in excess of eight (8) hours per day or forty (40) hours per week shall be paid at double the hourly rate of wage. All hours worked on Saturday, Sundays and holidays shall be paid at double the hourly rate of pay. Rates include all members of the assigned crew.

EXCEPTION:
On all multipole structures and steel transmission lines, switching stations, regulating, capacitor stations, generating plants, industrial plants, associated installations and substations, except those substations whose primary function is to feed a distribution system, will be paid overtime under the following rates:

The first two (2) hours after eight (8) regular hours Monday through Friday of overtime on a regular workday, shall be paid at one and one-half times the hourly rate of wage. All hours in excess of ten (10) hours will be at two (2) times the hourly rate of wage. The first eight (8) hours worked on Saturday will be paid at one and one-half (1-1/2) times the hourly rate of wage. All hours worked in excess of eight (8) hours on Saturday, and all hours worked on Sundays and holidays will be at the double the hourly rate of wage.

All overtime eligible hours performed on the above described work that is energized, shall be paid at the double the hourly rate of wage.

E. The first two (2) hours after eight (8) regular hours Monday through Friday and the first eight (8) hours on Saturday shall be paid at one and one-half times the hourly rate of wage. All other hours worked Monday through Saturday, and all hours worked on Sundays and holidays shall be paid at double the hourly rate of wage.

On a four-day, ten-hour weekly schedule, either Monday thru Thursday or Tuesday thru Friday schedule, all hours worked after ten shall be paid at double the hourly rate of wage. The Monday or Friday not utilized in the normal four-day, ten hour work week, and Saturday shall be paid at one and one half (1½) times the regular shift rate for the first eight (8) hours. All other hours worked Monday through Saturday, and all hours worked on Sundays and holidays shall be paid at double the hourly rate of wage.

G. All hours worked on Saturdays shall be paid at one and one-half times the hourly rate of wage. All hours worked Monday through Saturday over twelve (12) hours and all hours worked on Sundays and holidays shall be paid at double the hourly rate of wage.

I. The First eight (8) hours worked on Saturdays shall be paid at one and one-half times the hourly rate of wage. All hours worked in excess of eight (8) per day on Saturdays shall be paid at double the hourly rate of wage. All hours worked on Sundays and holidays shall be paid at double the hourly rate of wage.

Overtime Codes Continued

4. J. The first eight (8) hours worked on a Saturday shall be paid at one and one-half times the hourly rate of wage. All hours worked in excess of eight (8) hours on a Saturday shall be paid at double the hourly rate of wage. All hours worked over twelve (12) in a day, and all hours worked on Sundays and Holidays shall be paid at double the hourly rate of wage.

K. All hours worked on a Saturday shall be paid at one and one-half times the hourly rate of wage, so long as Saturday is the sixth consecutive day worked. All hours worked over twelve (12) in a day Monday through Saturday, and all hours worked on Sundays and Holidays shall be paid at double the hourly rate of wage.

L. The first twelve (12) hours worked on a Saturday shall be paid at one and one-half times the hourly rate of wage. All hours worked on a Saturday in excess of twelve (12) hours shall be paid at double the hourly rate of pay. All hours worked over twelve (12) in a day Monday through Friday, and all hours worked on Sundays shall be paid at double the hourly rate of wage. All hours worked on a holiday shall be paid at one and one-half times the hourly rate of wage, except that all hours worked on Labor Day shall be paid at double the hourly rate of pay.

S. On a four (4) day ten (10) hour workweek scheduled Monday through Thursday, or Tuesday through Friday, work performed in excess of (10) hours shall be paid at one and one half (1-1/2) times the hourly rate of pay. On Monday through Friday, work performed outside the normal work hours of 6:00 a.m. and 6:00 p.m. shall be paid at one and one-half (1-1/2) times the straight time rate, (except for special shifts or multiple shift operations).

All hours worked on Saturdays shall be paid at one and one-half times the hourly rate of wage. All work performed on Sundays and holidays shall be paid at double the hourly rate of wage. When an employee returns to work without at least eight (8) hours time off since their previous shift, all such time shall be a continuation of shift and paid at the applicable overtime rate until such time as the employee has had a break of eight (8) hours.

Multiple Shift Operations: When the first shift of a multiple shift (a two or three shift) operation is started at the basic straight time rate or at a specific overtime rate, all shifts of that day's operation shall be completed at that rate. Special Shifts: The Special Shift Premium is the basic hourly rate of pay plus $2.00 an hour. When due to conditions beyond the control of the employer or when an owner (not acting as the contractor), a government agency or the contract specifications require more than four (4) hours of a special shift can only be performed outside the normal 6am to 6pm shift then the special shift premium will be applied to the basic straight time for the entire shift. When an employee works on a special shift, they shall be paid the special shift premium for each hour worked unless they are in overtime or double-time status. (For example, the special shift premium does not waive the overtime requirements for work performed on Saturday or Sunday).

U. The first four (4) hours after eight (8) regular hours Monday through Friday and the first twelve (12) hours on Saturday shall be paid at one and one-half times the hourly rate of wage. (Except on makeup days if work is lost due to inclement weather, then the first eight (8) hours on Saturday may be paid the regular rate.) All hours worked over twelve (12) hours Monday through Saturday, and all hours worked on Sundays and holidays shall be paid at double the hourly rate of wage.

Overtime Codes Continued

4. V. Work performed in excess of ten (10) hours of straight time per day when four ten (10) hour shifts are established or outside the normal shift (5 am to 6pm), and all work on Saturdays, except for make-up days shall be paid at time and one-half (1 ½) the straight time rate.

In the event the job is down due to weather conditions, then Saturday may, be worked as a voluntary make-up day at the straight time rate. However, Saturday shall not be utilized as a make-up day when a holiday falls on Friday. All work performed on Sundays and holidays and work in excess of twelve (12) hours per day shall be paid at double (2x) the straight time rate of pay.

After an employee has worked eight (8) hours at an applicable overtime rate, all additional hours shall be at the applicable overtime rate until such time as the employee has had a break of eight (8) hours.

When an employee returns to work without a break of eight (8) hours since their previous shift, all such time shall be a continuation of shift and paid at the applicable overtime rate until such time as the employee has had a break of eight (8) hours.

X. All hours worked on Saturdays shall be paid at one and one-half times the hourly rate of wage. All hours worked on Sundays and holidays shall be paid at double the hourly rate of wage. Work performed outside the normal shift of 6 am to 6pm shall be paid at one and one-half the straight time rate, (except for special shifts or three shift operations). All work performed on Sundays and holidays shall be paid at double the hourly rate of wage. Shifts may be established when considered necessary by the Employer.

The Employer may establish shifts consisting of eight (8) or ten (10) hours of work (subject to WAC 296-127-022), that shall constitute a normal forty (40) hour work week. The Employer can change from a 5-eight to a 4-ten hour schedule or back to the other. All hours of work on these shifts shall be paid for at the straight time hourly rate. Work performed in excess of eight hours (or ten hours per day (subject to WAC 296-127-022) shall be paid at one and one-half the straight time rate.

When due to conditions beyond the control of the Employer, or when contract specifications require that work can only be performed outside the regular day shift, then by mutual agreement a special shift may be worked at the straight time rate, eight (8) hours work for eight (8) hours pay. The starting time shall be arranged to fit such conditions of work.

When an employee returns to work without at a break of eight (8) hours since their previous shift, all such time shall be a continuation of shift and paid at the applicable overtime rate until such time as the employee has had a break of eight (8) hours.

11. ALL HOURS WORKED IN EXCESS OF EIGHT (8) HOURS PER DAY OR FORTY (40) HOURS PER WEEK SHALL BE PAID AT ONE AND ONE-HALF TIMES THE HOURLY RATE OF WAGE.

B After an employee has worked eight (8) hours, all additional hours worked shall be paid at the applicable overtime rate until such time as the employee has had a break of eight (8) hours or more.

C The first two (2) hours after eight (8) regular hours Monday through Friday and the first eight (8) hours on Saturday shall be paid at one and one-half times the hourly rate of wage. All other overtime hours worked, except Labor Day, and all hours on Sunday shall be paid at double the hourly rate of wage. All hours worked on Labor Day shall be paid at three times the hourly rate of wage. All non-overtime and non-holiday hours worked between 4:00 pm and 5:00 am, Monday through Friday, shall be paid at a premium rate of 15% over the hourly rate of wage.

Overtime Codes Continued

11. D. All hours worked on Saturdays and holidays shall be paid at one and one-half times the hourly rate of wage. All hours worked on Sundays shall be paid at double the hourly rate of wage.

After an employee has worked eight (8) hours, all additional hours worked shall be paid at the applicable overtime rate until such time as the employee has had a break of eight (8) hours or more.

E. The first two (2) hours after eight (8) regular hours Monday through Friday, the first ten (10) hours on Saturday, and the first ten (10) hours worked on Holidays shall be paid at one and one-half times the hourly rate of wage. All hours worked over ten (10) hours Monday through Saturday, and Sundays shall be paid at double the hourly rate of wage.

After an employee has worked eight (8) hours, all additional hours worked shall be paid at the applicable overtime rate until such time as the employee has had a break of eight (8) hours or more.

F. The first two (2) hours after eight (8) regular hours Monday through Friday and the first eight (8) hours on Saturday shall be paid at one and one-half times the hourly rate of wage. All other hours worked Monday through Saturday, and all hours worked on Sundays and holidays shall be paid at double the hourly rate of wage.

On a four-day, ten-hour weekly schedule, either Monday thru Thursday or Tuesday thru Friday schedule, all hours worked after ten shall be paid at double the hourly rate of wage. The Monday or Friday not utilized in the normal four-day, ten hour work week, and Saturday shall be paid at one-half times the hourly rate of wage for the first eight (8) hours. All other hours worked Monday through Saturday, and all hours worked on Sundays and holidays shall be paid at double the hourly rate of wage.

G. Work performed in excess of eight (8) hours of straight time per day, or ten (10) hours of straight time per day when four ten (10) hour shifts are established, or forty (40) hours of straight time per week, Monday through Friday, or outside the normal 5 am to 6pm shift, and all work on Saturdays shall be paid at one and one-half times the hourly rate of wage.

All work performed after 6:00 pm Saturday to 5:00 am Monday and Holidays, and all hours worked in excess of twelve (12) hours in a single shift shall be paid at double the hourly rate of wage.

After an employee has worked eight (8) hours at an applicable overtime rate, all additional hours shall be at the applicable overtime rate until such time as the employee has had a break of nine (9) hours or more. When an employee returns to work without at least nine (9) hours time off since their previous shift, all such time shall be a continuation of shift and paid at the applicable overtime rate until he/she shall have the nine (9) hours rest period.

H. Work performed in excess of eight (8) hours of straight time per day, or ten (10) hours of straight time per day when four ten (10) hour shifts are established, or forty (40) hours of straight time per week, Monday through Friday, or outside the normal 5 am to 6pm shift, and all work on Saturdays shall be paid at one and one-half times the hourly rate of wage.

All work performed after 6:00 pm Saturday to 5:00 am Monday and Holidays, and all hours worked in excess of twelve (12) hours in a single shift shall be paid at double the hourly rate of wage.

After an employee has worked eight (8) hours at an applicable overtime rate, all additional hours shall be at the applicable overtime rate until such time as the employee has had a break of ten (10) hours or more. When an employee returns to work without at least ten (10) hours time off since their previous shift, all such time shall be a continuation of shift and paid at the applicable overtime rate until he/she shall have the ten (10) hours rest period.

Overtime Codes Continued

11. J. All hours worked on holidays shall be paid at double the hourly rate of wage.

K. On Monday through Friday hours worked outside 4:00 am and 5:00 pm, and the first two (2) hours after eight (8) hours worked shall be paid at one and one-half times the hourly rate. All hours worked over 10 hours per day Monday through Friday, and all hours worked on Saturdays, Sundays, and Holidays worked shall be paid at double the hourly rate of wage.

L. An employee working outside 5:00 am and 5:00 pm shall receive an additional two dollar ($2.00) per hour for all hours worked that shift. All hours worked on holidays shall be paid at one and one-half times the hourly rate of wage. All hours worked on holidays shall be paid at one and one-half times the hourly rate of wage.

M. On Monday through Friday, the first four (4) hours of overtime after eight (8) hours of straight time work shall be paid at one and one half (1-1/2) times the straight time rate of pay, unless a four (4) day ten (10) hour workweek has been established. On a four (4) day ten (10) hour workweek scheduled Monday through Thursday, or Tuesday through Friday, the first two (2) hours of overtime after ten (10) hours of straight time work shall be paid at one and one half (1-1/2) times the straight time rate of pay.

Work performed outside the normal work hours of 5:00 a.m. and 6:00 p.m. shall be paid at one and one-half (1-1/2) times the straight time rate, (except for special shifts or multiple shift operations). When the first shift of a multiple shift (a two or three shift) operation is started at the basic straight time rate or at a specific overtime rate, all shifts of that day's operation shall be completed at that rate. When due to conditions beyond the control of the Employer or when contract specifications require that work can only be performed outside the regular day shift of 5:00 am to 6:00 pm, then a special shift may be worked at the straight time rate, plus the shift pay premium when applicable. The starting time of work will be arranged to fit such conditions of work. Such shift shall consist of eight (8) hours work for eight (8) hours pay or ten (10) hours work for ten (10) hours pay for four ten shifts.

On Saturday, the first twelve (12) hours of work shall be paid at one and one half (1-1/2) times the straight time rate of pay. All work performed after 6:00 pm Saturday to 5:00 am Monday, all work performed over twelve (12) hours, and all work performed on holidays shall be paid at double the straight time rate of pay.

Shift Pay Premium: In an addition to any overtime already required, all hours worked between the hours of 6:00 pm and 5:00 am shall receive an additional two dollars ($2.00) per hour.

N. All work performed over twelve hours in a shift and all work performed on Sundays and Holidays shall be paid at double the straight time rate.

Any time worked over eight (8) hours on Saturday shall be paid double the straight time rate, except employees assigned to work six 10-hour shifts per week shall be paid double the straight time rate for any time worked on Saturday over 10 hours.

O. All work performed on Saturdays, Sundays, and Holidays shall be paid at one and one half (1-1/2) times the straight time rate of pay.

Holiday Codes

5. A. Holidays: New Year's Day, Memorial Day, Independence Day, Labor Day, Thanksgiving Day, Friday after Thanksgiving Day, and Christmas Day (7).

B. Holidays: New Year's Day, Memorial Day, Independence Day, Labor Day, Thanksgiving Day, Friday after Thanksgiving Day, the day before Christmas, and Christmas Day (8).

C. Holidays: New Year's Day, Presidents' Day, Memorial Day, Independence Day, Labor Day, Thanksgiving Day, the Friday after Thanksgiving Day, And Christmas Day (8).

D. Holidays: New Year's Day, Memorial Day, Independence Day, Labor Day, Thanksgiving Day, the Friday and Saturday after Thanksgiving Day, And Christmas Day (8).

H. Holidays: New Year's Day, Memorial Day, Independence Day, Thanksgiving Day, the Day after Thanksgiving Day, And Christmas (6).

I. Holidays: New Year's Day, Memorial Day, Independence Day, Labor Day, Thanksgiving Day, and Christmas Day (6).

K. Holidays: New Year's Day, Presidents' Day, Memorial Day, Independence Day, Labor Day, Thanksgiving Day, Friday After Thanksgiving Day, The Day Before Christmas, And Christmas Day (9).

L. Holidays: New Year's Day, Martin Luther King Jr. Day, Memorial Day, Independence Day, Labor Day, Thanksgiving Day, Friday after Thanksgiving Day, And Christmas Day (8).

N. Holidays: New Year's Day, Presidents' Day, Memorial Day, Independence Day, Labor Day, Veterans' Day, Thanksgiving Day, The Friday After Thanksgiving Day, And Christmas Day (9).

P. Holidays: New Year's Day, Memorial Day, Independence Day, Labor Day, Thanksgiving Day, Friday And Saturday After Thanksgiving Day, The Day Before Christmas, And Christmas Day (9). If A Holiday Falls On Sunday, The Following Monday Shall Be Considered As A Holiday.

Q. Paid Holidays: New Year's Day, Memorial Day, Independence Day, Labor Day, Thanksgiving Day, and Christmas Day (6).

R. Paid Holidays: New Year's Day, Memorial Day, Independence Day, Labor Day, Thanksgiving Day, Day After Thanksgiving Day, One-Half Day Before Christmas Day, And Christmas Day. (7 1/2).

S. Paid Holidays: New Year's Day, Presidents' Day, Memorial Day, Independence Day, Labor Day, Thanksgiving Day, And Christmas Day (7).

Z. Holidays: New Year's Day, Memorial Day, Independence Day, Labor Day, Veterans Day, Thanksgiving Day, the Friday after Thanksgiving Day, And Christmas Day (8).

6. G. Paid Holidays: New Year's Day, Martin Luther King Jr. Day, Presidents' Day, Memorial Day, Independence Day, Labor Day, Veterans' Day, Thanksgiving Day, the Friday after Thanksgiving Day, Christmas Day, and Christmas Eve Day (11).

H. Paid Holidays: New Year's Day, New Year's Eve Day, Memorial Day, Independence Day, Labor Day, Thanksgiving Day, Friday After Thanksgiving Day, Christmas Day, The Day After Christmas, And A Floating Holiday (10).

Holiday Codes Continued

6. T. Paid Holidays: New Year's Day, Presidents' Day, Memorial Day, Independence Day, Labor Day, Thanksgiving Day, The Friday After Thanksgiving Day, The Last Working Day Before Christmas Day, And Christmas Day (9).

   Z. Holidays: New Year's Day, Memorial Day, Independence Day, Labor Day, Thanksgiving Day, Friday after Thanksgiving Day, And Christmas Day (7). If a holiday falls on Saturday, the preceding Friday shall be considered as the holiday. If a holiday falls on Sunday, the following Monday shall be considered as the holiday.

7. A. Holidays: New Year's Day, Memorial Day, Independence Day, Labor Day, Thanksgiving Day, the Friday and Saturday after Thanksgiving Day, And Christmas Day (8). Any Holiday Which Falls On A Sunday Shall Be Observed As A Holiday On The Following Monday. If any of the listed holidays falls on a Saturday, the preceding Friday shall be a regular work day.

   B. Holidays: New Year's Day, Memorial Day, Independence Day, Labor Day, Thanksgiving Day, the Friday and Saturday after Thanksgiving Day, And Christmas Day (8). Any holiday which falls on a Sunday shall be observed as a holiday on the following Monday. Any holiday which falls on a Saturday shall be observed as a holiday on the preceding Friday.

   C. Holidays: New Year's Day, Martin Luther King Jr. Day, Memorial Day, Independence Day, Labor Day, Thanksgiving Day, the Friday after Thanksgiving Day, And Christmas Day (8). Any holiday which falls on a Sunday shall be observed as a holiday on the following Monday. Any holiday which falls on a Saturday shall be observed as a holiday on the preceding Friday.

   D. Paid Holidays: New Year's Day, Memorial Day, Independence Day, Labor Day, Veteran's Day, Thanksgiving Day, the Friday after Thanksgiving Day, And Christmas Day (8). Unpaid Holidays: President's Day. Any paid holiday which falls on a Sunday shall be observed as a holiday on the following Monday. Any paid holiday which falls on a Saturday shall be observed as a holiday on the preceding Friday.

   E. Holidays: New Year's Day, Memorial Day, Independence Day, Labor Day, Thanksgiving Day, the Friday after Thanksgiving Day, And Christmas Day (7). Any holiday which falls on a Sunday shall be observed as a holiday on the following Monday. Any holiday which falls on a Saturday shall be observed as a holiday on the preceding Friday.

   F. Holidays: New Year's Day, Memorial Day, Independence Day, Labor Day, Thanksgiving Day, the Friday after Thanksgiving Day, the last working day before Christmas day and Christmas day (8). Any holiday which falls on a Sunday shall be observed as a holiday on the following Monday. Any holiday which falls on a Saturday shall be observed as a holiday on the preceding Friday.

   G. Holidays: New Year's Day, Memorial Day, Independence Day, Labor Day, Thanksgiving Day, and Christmas Day (6). Any holiday which falls on a Sunday shall be observed as a holiday on the following Monday.

   H. Holidays: New Year's Day, Martin Luther King Jr. Day, Independence Day, Memorial Day, Labor Day, Thanksgiving Day, the Friday after Thanksgiving Day, the Last Working Day before Christmas Day and Christmas Day (9). Any holiday which falls on a Sunday shall be observed as a holiday on the following Monday. Any holiday which falls on a Saturday shall be observed as a holiday on the preceding Friday.

   I. Holidays: New Year's Day, President's Day, Independence Day, Memorial Day, Labor Day, Thanksgiving Day, The Friday After Thanksgiving Day, The Day Before Christmas Day And Christmas Day (9). Any holiday which falls on a Sunday shall be observed as a holiday on the following Monday. Any holiday which falls on a Saturday shall be observed as a holiday on the preceding Friday.

Holiday Codes Continued

7. J. Holidays: New Year's Day, Independence Day, Memorial Day, Labor Day, Thanksgiving Day and Christmas Day (6). Any holiday which falls on a Sunday shall be observed as a holiday on the following Monday. Any holiday which falls on a Saturday shall be observed as a holiday on the preceding Friday.

K. Holidays: New Year's Day, Memorial Day, Independence Day, Thanksgiving Day, the Friday and Saturday after Thanksgiving Day, And Christmas Day (8). Any holiday which falls on a Sunday shall be observed as a holiday on the following Monday. Any holiday which falls on a Saturday shall be observed as a holiday on the preceding Friday.

L. Holidays: New Year's Day, Memorial Day, Labor Day, Independence Day, Thanksgiving Day, the Last Work Day before Christmas Day, And Christmas Day (7). Any holiday which falls on a Sunday shall be observed as a holiday on the following Monday. Any holiday which falls on a Saturday shall be observed as a holiday on the preceding Friday.

N. Holidays: New Year's Day, Memorial Day, Independence Day, Labor Day, Thanksgiving Day, the Friday after Thanksgiving Day, And Christmas Day (7). Any holiday which falls on a Sunday shall be observed as a holiday on the following Monday. When Christmas falls on a Saturday, the preceding Friday shall be observed as a holiday.

P. Holidays: New Year's Day, Memorial Day, Independence Day, Labor Day, Thanksgiving Day, Friday after Thanksgiving Day, And Christmas Day (7). Any holiday which falls on a Sunday shall be observed as a holiday on the following Monday.

Q. Holidays: New Year's Day, Memorial Day, Independence Day, Labor Day, Thanksgiving Day, the Friday after Thanksgiving Day, the Last Working Day before Christmas Day and Christmas Day (8). Any holiday which falls on a Sunday shall be observed as a holiday on the following Monday. If any of the listed holidays falls on a Saturday, the preceding Friday shall be a regular work day.

S. Paid Holidays: New Year's Day, Memorial Day, Independence Day, Labor Day, Thanksgiving Day, Friday after Thanksgiving Day, Christmas Day, the Day after Christmas, and A Floating Holiday (9). If any of the listed holidays falls on a Sunday, the day observed by the Nation shall be considered a holiday and compensated accordingly.

V. Holidays: New Year's Day, President's Birthday, Memorial Day, Independence Day, Labor Day, Thanksgiving Day, the Friday after Thanksgiving Day, Christmas Day, the day before or after Christmas, and the day before or after New Year's Day. If any of the above listed holidays falls on a Sunday, the day observed by the Nation shall be considered a holiday and compensated accordingly.

W. Holidays: New Year's Day, Day After New Year's, Memorial Day, Independence Day, Labor Day, Thanksgiving Day, the Friday after Thanksgiving Day, Christmas Eve Day, Christmas Day, the day after Christmas, the day before New Year's Day, and a Floating Holiday.

X. Holidays: New Year's Day, Day before or after New Year's Day, Presidents' Day, Memorial Day, Independence Day, Labor Day, Thanksgiving Day, the Friday after Thanksgiving Day, Christmas Day, and the day before or after Christmas day. If a holiday falls on a Saturday or on a Friday that is the normal day off, then the holiday will be taken on the last normal workday. If the holiday falls on a Monday that is the normal day off or on a Sunday, then the holiday will be taken on the next normal workday.

Y. Holidays: New Year's Day, Presidents' Day, Memorial Day, Independence Day, Labor Day, Thanksgiving Day, the Friday after Thanksgiving Day, and Christmas Day. (8) If the holiday falls on a Sunday, then the day observed by the federal government shall be considered a holiday and compensated accordingly.

Z. Holidays: New Year's Day, Memorial Day, Independence Day, Labor Day, Thanksgiving Day, the Friday and Saturday after Thanksgiving Day, Christmas Eve, and Christmas Day (9). Any holiday which falls on a Saturday shall be observed as a holiday on the preceding Friday. Any holiday which falls on a Sunday shall be observed as a holiday on the following Monday.

Holiday Codes Continued

15. G. New Year's Day, Washington's Birthday, Memorial Day, Independence Day, Labor Day, Thanksgiving Day, The Friday After Thanksgiving Day, the last scheduled workday before Christmas, and Christmas Day (9). If any of the listed holidays falls on a Sunday, the day observed by the Nation shall be considered a holiday and compensated accordingly.

H. Holidays: New Year's Day, Martin Luther King Jr. Day, Independence Day, Memorial Day, Labor Day, Thanksgiving Day, the Friday after Thanksgiving Day, the Last Working Day before Christmas Day and Christmas Day (9). Any holiday which falls on a Sunday shall be observed as a holiday on the following Monday. Any holiday which falls on a Saturday shall be observed as a holiday on the preceding Friday.

I. Holidays: New Year's Day, President's Day, Independence Day, Memorial Day, Labor Day, Thanksgiving Day, The Friday After Thanksgiving Day, The Day Before Christmas Day And Christmas Day (9). Any holiday which falls on a Sunday shall be observed as a holiday on the following Monday. Any holiday which falls on a Saturday shall be observed as a holiday on the preceding Friday.

J. Holidays: New Year's Day, Martin Luther King Jr. Day, Memorial Day, Independence Day, Labor Day, Thanksgiving Day, the Friday and Saturday after Thanksgiving Day, and Christmas Day (9). Any holiday which falls on a Sunday shall be observed as a holiday on the following Monday. If any of the listed holidays falls on a Saturday, the preceding Friday shall be a regular work day.

K. Holidays: New Year's Day, Memorial Day, Independence Day, Thanksgiving Day, the Friday and Saturday after Thanksgiving Day, And Christmas Day (8). Any holiday which falls on a Sunday shall be observed as a holiday on the following Monday. Any holiday which falls on a Saturday shall be observed as a holiday on the preceding Friday.

L. Holidays: New Year's Day, Memorial Day, Independence Day, Labor Day, Veteran's Day, Thanksgiving Day, the Friday after Thanksgiving Day, and Christmas Day (8). Any holiday which falls on a Sunday shall be observed as a holiday on the following Monday. If any of the listed holidays falls on a Saturday, the preceding Friday shall be a regular work day.

M. Holidays: New Year's Day, Martin Luther King Jr. Day, Independence Day, Memorial Day, Labor Day, Thanksgiving Day, the Friday after Thanksgiving Day, Christmas Eve Day and Christmas Day (9). Any holiday which falls on a Sunday shall be observed as a holiday on the following Monday. If any of the listed holidays falls on a Saturday, the preceding Friday shall be a regular work day.

N. Holidays: New Year's Day, Memorial Day, Independence Day, Labor Day, Veteran's Day, Thanksgiving Day, the Friday after Thanksgiving Day, and Christmas Day (8). Any holiday which falls on a Sunday shall be observed as a holiday on the following Monday.

Note Codes

8. D. Workers working with supplied air on hazmat projects receive an additional $1.00 per hour.

L. Workers on hazmat projects receive additional hourly premiums as follows -Level A: $0.75, Level B: $0.50, And Level C: $0.25.

M. Workers on hazmat projects receive additional hourly premiums as follows: Levels A & B: $1.00, Levels C & D: $0.50.

N. Workers on hazmat projects receive additional hourly premiums as follows -Level A: $1.00, Level B: $0.75, Level C: $0.50, And Level D: $0.25.

Note Codes Continued

8. S. Effective August 31, 2012 – A Traffic Control Supervisor shall be present on the project whenever flagging or spotting or other traffic control labor is being utilized. Flaggers and Spotters shall be posted where shown on approved Traffic Control Plans or where directed by the Engineer. All flaggers and spotters shall possess a current flagging card issued by the State of Washington, Oregon, Montana, or Idaho. This classification is only effective on or after August 31, 2012.

T. Effective August 31, 2012 – A Traffic Control Laborer performs the setup, maintenance and removal of all temporary traffic control devices and construction signs necessary to control vehicular, bicycle, and pedestrian traffic during construction operations. Flaggers and Spotters shall be posted where shown on approved Traffic Control Plans or where directed by the Engineer. All flaggers and spotters shall possess a current flagging card issued by the State of Washington, Oregon, Montana, or Idaho. This classification is only effective on or after August 31, 2012.

U. Workers on hazmat projects receive additional hourly premiums as follows – Class A Suit: $2.00, Class B Suit: $1.50, And Class C Suit: $1.00. Workers performing underground work receive an additional $0.40 per hour for any and all work performed underground, including operating, servicing and repairing of equipment. The premium for underground work shall be paid for the entire shift worked. Workers who work suspended by a rope or cable receive an additional $0.50 per hour. The premium for work suspended shall be paid for the entire shift worked. Workers who do “pioneer” work (break open a cut, build road, etc.) more than one hundred fifty (150) feet above grade elevation receive an additional $0.50 per hour.

V. In addition to the hourly wage and fringe benefits, the following depth and enclosure premiums shall be paid. The premiums are to be calculated for the maximum depth and distance into an enclosure that a diver reaches in a day. The premiums are to be paid one time for the day and are not used in calculating overtime pay.

Depth premiums apply to depths of fifty feet or more. Over 50' to 100' - $2.00 per foot for each foot over 50 feet. Over 101' to 150' - $3.00 per foot for each foot over 101 feet. Over 151' to 220' - $4.00 per foot for each foot over 220 feet. Over 221' - $5.00 per foot for each foot over 221 feet.

Enclosure premiums apply when divers enter enclosures (such as pipes or tunnels) where there is no vertical ascent and is measured by the distance travelled from the entrance. 25’ to 300’ - $1.00 per foot from entrance. 300’ to 600’ - $1.50 per foot beginning at 300’. Over 600’ - $2.00 per foot beginning at 600’.

W. Meter Installers work on single phase 120/240V self-contained residential meters. The Lineman/Groundmen rates would apply to meters not fitting this description.

X. Workers on hazmat projects receive additional hourly premiums as follows - Class A Suit: $2.00, Class B Suit: $1.50, Class C Suit: $1.00, and Class D Suit: $0.50. Special Shift Premium: Basic hourly rate plus $2.00 per hour.

When due to conditions beyond the control of the Employer or when an owner (not acting as the contractor), a government agency or the contract specifications requires that work can only be performed outside the normal 5 am to 6pm shift, then the special shift premium will be applied to the basic hourly rate. When an employee works on a special shift, they shall be paid a special shift premium for each hour worked unless they are in OT or Double-time status. (For example, the special shift premium does not waive the overtime requirements for work performed on Saturday or Sunday.)

Y. Tide Work: When employees are called out between the hours of 6:00 p.m. and 6:00 a.m. to work on tide work (work located in the tide plane) all time worked shall be at one and one-half times the hourly rate of pay.

Swinging Stage/Boatswains Chair: Employees working on a swinging state or boatswains chair or under conditions that require them to be tied off to allow their hands to be free shall receive seventy-five cents ($0.75) per hour above the classification rate.

Note Codes Continued

8. Z. Workers working with supplied air on hazmat projects receive an additional $1.00 per hour.

Special Shift Premium: Basic hourly rate plus $2.00 per hour. When due to conditions beyond the control of the Employer or when an owner (not acting as a contractor), a government agency or the contract specifications require that more than (4) hours of a special shift can only be performed outside the normal 6 am to 6pm shift, then the special shift premium will be applied to the basic straight time for the entire shift. When an employee works on a special shift, they will be paid a special shift premium for each hour worked unless they are in overtime or double-time status. (For example, the special shift premium does not waive the overtime requirements for work performed on Saturday or Sunday.)

9. A. Workers working with supplied air on hazmat projects receive an additional $1.00 per hour.

Special Shift Premium: Basic hourly rate plus $2.00 per hour. When due to conditions beyond the control of the Employer or when an owner (not acting as the contractor), a government agency or the contract specifications require that more than four (4) hours of a special shift can only be performed outside the normal 6 am to 6pm shift, then the special shift premium will be applied to the basic straight time for the entire shift. When an employee works on a special shift, they shall be paid a special shift premium for each hour worked unless they are in overtime or double-time status. (For example, the special shift premium does not waive the overtime requirements for work performed on Saturday or Sunday.)

Certified Crane Operator Premium: Crane operators requiring certifications shall be paid $0.50 per hour above their classification rate.

Boom Pay Premium: All cranes including tower shall be paid as follows based on boom length:

(A) – 130’ to 199’ – $0.50 per hour over their classification rate.
(B) – 200’ to 299’ – $0.80 per hour over their classification rate.
(C) – 300’ and over – $1.00 per hour over their classification rate.

B. The highest pressure registered on the gauge for an accumulated time of more than fifteen (15) minutes during the shift shall be used in determining the scale paid.

Tide Work: When employees are called out between the hours of 6:00 p.m. and 6:00 a.m. to work on tide work (work located in the tide plane) all time worked shall be at one and one-half times the hourly rate of pay. Swinging Stage/Boatswains Chair: Employees working on a swinging stage or boatswains chair or under conditions that require them to be tied off to allow their hands to be free shall receive seventy-five cents ($0.75) per hour above the classification rate.

C. Tide Work: When employees are called out between the hours of 6:00 p.m. and 6:00 a.m. to work on tide work (work located in the tide plane) all time worked shall be at one and one-half times the hourly rate of pay. Swinging Stage/Boatswains Chair: Employees working on a swinging stage or boatswains chair or under conditions that require them to be tied off to allow their hands to be free shall receive seventy-five cents ($0.75) per hour above the classification rate.

Effective August 31, 2012 – A Traffic Control Supervisor shall be present on the project whenever flagging or spotting or other traffic control labor is being utilized. A Traffic Control Laborer performs the setup, maintenance and removal of all temporary traffic control devices and construction signs necessary to control vehicular, bicycle, and pedestrian traffic during construction operations. Flaggers and Spotters shall be posted where shown on approved Traffic Control Plans or where directed by the Engineer. All flaggers and spotters shall possess a current flagging card issued by the State of Washington, Oregon, Montana, or Idaho. These classifications are only effective on or after August 31, 2012.

D. Industrial Painter wages are required for painting within industrial facilities such as treatment plants, pipelines, towers, dams, bridges, power generation facilities and manufacturing facilities such as chemical plants, etc., or anywhere abrasive blasting is necessary to prepare surfaces, or hazardous materials encapsulation is required.

Note Codes Continued

9. E. Heavy Construction includes construction, repair, alteration or additions to the production, fabrication or manufacturing portions of industrial or manufacturing plants, hydroelectric or nuclear power plants and atomic reactor construction. Workers on hazmat projects receive additional hourly premiums as follows -Level A: $1.00, Level B: $0.75, Level C: $0.50, And Level D: $0.25.

F. Industrial Painter wages are required for painting within industrial facilities such as treatment plants, pipelines, towers, dams, power generation facilities and manufacturing facilities such as chemical plants, etc., or anywhere abrasive blasting is necessary to prepare surfaces, or hazardous materials encapsulation is required.

H. One (1) person crew shall consist of a Party Chief. (Total Station or similar one (1) person survey system). Two (2) person survey party shall consist of a least a Party Chief and a Chain Person. Three (3) person survey party shall consist of at least a Party Chief, an Instrument Person, and a Chain Person.

GENERAL CONDITIONS

TABLE OF CONTENTS

A. General Provisions
1. Intent of Contract and Coordination of Contract documents
2. Definitions
3. Abbreviations
4. Insurance
5. Indemnification
6. Washington State Sales Tax
7. Independent Contractor Relationship
8. Compliance with laws

B. Bidding and Award of Contract
9. Bidder Qualifications – Previous Experience
10. Examination of Site of Work – Differing Site Conditions
11. Plans and Specifications – Omissions and Discrepancies
12. Pre-construction Conference
13. Commencement and Prosecution of Work

C. Scope and Responsibility for Work
14. Status of Engineer
15. Inspections and Tests
16. Time for Completion
17. Progress Schedule
18. Alternate Designs
19. Shop Drawings
20. Ownership of Drawings
21. Surveys, Permits, Points, and Instructions
22. Records Retention
23. Final Inspection and Acceptance
24. Assignment and Subcontracting
25. Work on City Streets
26. Existing Utilities or Obstructions
27. Replacing Improvements
28. Traffic Maintenance and Protection
29. Separate Contracts – Interference with other Contractors
30. Clean-up

D. Materials and Equipment
31. Materials and Equipment Used in Work
32. Materials and Equipment Incorporated into Work
33. Materials and Equipment Furnished by the City
34. Cutting and Fitting
35. Determination of "Or Equal"
36. Royalties and Patents

© RH2 Engineering, Inc., 2023

E. Workers
37. Workers and Supervision
38. Prevailing Wages
39. Worker Benefits

F. Payment
40. Application for Payment
41. Schedule of Values for Lump Sum Work
42. Payments Withheld

G. Force Account

H. Changes and Disputes
43. Changes in Work
44. Minor Changes
45. Variations in Estimated Quantities
46. Equitable Adjustments
47. Protests
48. Disputes
49. Delays and Extensions of Time
50. Unauthorized or Defective Work
51. Defects Arising within One Year and Remedies
52. Suspension of Work
53. Termination of Contract
54. Liquidated Damages
55. Unilateral Acceptance
56. Jurisdiction, Venue, and Time Limits on Disputes

© RH2 Engineering, Inc., 2023

A. GENERAL PROVISIONS

1. Intent of Contract and Coordination of Contract Documents

The intent of the Contract is to prescribe a complete Work. Omissions from the Contract of details of Work that are necessary to carry out the intent of the Contract shall not relieve the Contractor from performing the omitted Work. The Contractor shall provide all labor, materials, tools, equipment, transportation, supplies, and incidentals required to complete all Work for the items included in the Proposal.

The parts of the Contract complement each other in describing a complete Work. Any requirement in one part binds as if stated in all parts. The Contractor shall provide any Work or materials clearly implied in the Contract even if the Contract does not mention it specifically.

Any inconsistency in the Contract documents shall be resolved in the following order (from highest to lowest priority):

- Change Orders after they are Approved
- Addenda
- Contract
- Measurement and Payment
- Plans
- Standard Details
- Supplemental Provisions
- Special Provisions
- Owner's Development Standards
- General Conditions
- Instructions to Bidders
- Reference Specifications
- Proposal
- Performance Bond

If any part of the Contract requires Work that does not include a description for how the Work is to be performed, the Work shall be performed in accordance with standard trade practice(s). For purposes of the Contract, a standard trade practice is one having such regularity of observance in the trade as to justify an expectation that it will be observed by the Contractor in doing the Work.

In case of any ambiguity or dispute over interpreting the Contract, the Engineer's decision will be final as provided in Section 13.

2. DEFINITIONS

© RH2 Engineering, Inc., 2023

Addendum

A written or graphic document, issued to all Bidders and identified as an Addendum prior to Bid opening, which modifies or supplements the Bid Documents and becomes a part of the Contract.

Approximate

Generally as shown or described, but has not been verified, or may require adjustment. No level of accuracy is implied or should be assumed.

Auxiliary Lane

The part of the Roadway next to Traveled Ways for parking, speed changes, turning, weaving, truck climbing or for anything that adds to through traffic movement.

Award

The formal decision of the City to accept the lowest responsible and responsive Bidder for the Work.

Bid, Proposal

The offer of a Bidder on a properly completed Proposal Form to perform the Contract.

Bid Documents

The component parts of the proposed Contract which may include, but are not limited to, the Proposal Form, the Instructions to Bidders, the proposed Contract Provisions, the proposed Contract Plans, Addenda, and subsurface boring logs (if any).

Call for Bids (Advertisement for Bids)

The published public notice soliciting Proposals or Bids for Work stating, among other things, the time, place, and date for receiving and opening the Bids.

Completion Dates

Substantial Completion Date is the day the Engineer determines the City has full and unrestricted use and benefit of the facilities, both from the operational and safety standpoint, all the initial plantings are completed and only minor incidental work, replacement of temporary substitute facilities, plant establishment periods, or correction or repair remains for the Physical Completion of the total Contract.

Physical Completion Date is the day all of the Work is physically completed on the project. All documentation required by the Contract and required by law does not necessarily need to be furnished by the Contractor by this date.

Completion Date is the day all the Work specified in the Contract is completed and all the obligations of the Contractor under the Contract are fulfilled by the Contractor. All

© RH2 Engineering, Inc., 2023

documentation required by the Contract and required by law must be furnished by the Contractor before establishment of this date.

Contract

The written agreement between the City and the Contractor. It describes, among other things:

1. What work will be done, and by when;
2. Who provides labor and materials; and
3. How Contractors will be paid.

The Contract includes the Contract (agreement) Form, Bidder's completed Proposal Form, Contract Provisions, Instructions to Bidders, Contract Plans, Standard Specifications, Standard Plans, Technical Provisions, Owner's Development Standards, General Conditions, Addenda, Reference Specifications, various certifications and affidavits, supplemental agreements, change orders, and subsurface boring logs (if any).

Contract Bond

The approved form of security furnished by the Contractor and the Contractor's Surety as required by the Contract, that guarantees performance of all the Work required by the Contract and payment to anyone who provides supplies or labor for the performance of the Work.

Contract Form (Agreement Form)

The form provided by the City that requires the authorized signatures of the Contractor and the City to result in formal execution of the Contract.

Contractor

The individual, partnership, firm, corporation, or joint venture, Contracting with the City to do prescribed Work.

Contract Plans

A publication addressing the Work required for an individual project. At the time of the call for Bids, the Contract Plans may include, but are not limited to, the following: a vicinity map, a summary of quantities, structure notes, signing information, traffic control plans, and detailed drawings; all for a specific individual project. At the time of the Contract execution date, the Contract Plans include any Addenda.

Contract Provisions

A publication addressing the Work required for an individual project. At the time of the call for Bids, the Contract Provisions may include, for a specific individual project, the amendments to the standard Specifications, the Special Provisions, a listing of the applicable

© RH2 Engineering, Inc., 2023

Standard Plans, the prevailing minimum hourly wage rates, and an informational Proposal Form with the listing of Bid items. The proposed Contract Provisions may also include, for a specific individual project, the Required Contract Provisions Federal-aid Construction Contracts, and various required certifications or declarations. At the time of the Contract execution date, the Contract Provisions include the proposed Contract Provisions and include any Addenda, a copy of the Contract Form, and a copy of the Proposal Form with the Contract prices and extensions.

Engineer

The City's representative who administers the construction program for the City.

Frontage Road

A local street or road usually next to an arterial Highway that serves abutting property and adjacent areas and controls access.

Inspector

The Engineer's representative who inspects Contract performance in detail.

Laboratory

The laboratories of the City, or other laboratories the City authorizes to test Work, soils, and materials.

Or Equal (Or Approved Equal)

An alternate product, assembly, or method that the Owner's Representative has reviewed based on information provided by the Contractor and determined to provide functional equivalence, or better, than that specified. Such determination does not relieve the Contractor from responsibility should the product, process, or method fail to perform as needed.

Owner's Representative

Person(s) authorized by the Owner to observe the work, administer the contract, approve tests, make decisions, and otherwise act as an agent of the Owner. The terms Engineer, Owner's Observer, Owner's Inspector, and Owner are generally interchangeable with the term Owner's Representative.

Plans

The Contract Plans or Standard Plans which show location, character, and dimensions of prescribed Work including layouts, profiles, cross-sections, and other details.

Proposal Form

The form provided to Bidders by the City for submittal of a Proposal or Bid to the City for a specific project. The form includes the item number, estimated plan quantity, and item description of the Bid items along with blank spaces to be completed by the Bidder for the

© RH2 Engineering, Inc., 2023

unit prices, extensions, the total Bid amount, signatures, date, acknowledgment of Addenda, and the Bidder's address. The required certifications and declarations are part of the form.

Proposed

The word refers to work that is part of the Contract, to be performed by the Contractor. The word "proposed" does not need to show up to indicate work by the Contractor. Unless work is specifically noted to be performed by others, all work is to be performed by the Contractor.

Right of Way

Land, property, or property interest, usually in a strip, acquired for or devoted to transportation purposes.

Roadbed

The graded part of the Roadway within top and side slopes, prepared as a foundation for the pavement structure and Shoulders.

Roadway

The portion of the Right of Way within the outside limits of the side slopes.

Shoulder

The part of the Roadway next to the Traveled Way or Auxiliary Lanes. It provides lateral support of base and surface courses and is an emergency stopping area for vehicles.

Specifications

Provisions and requirements for the prescribed Work.

Standard Plans

A manual of specific plans or drawings adopted by the City which show frequently recurring components of Work that have been standardized for use.

Structures

Bridges, culverts, catch basins, drop inlets, retaining walls, cribbing, manholes, endwalls, buildings, service pipes, sewers, underdrains, foundation drains, and other features found during Work that the Contract may or may not classify as a Structure.

Subcontractor

An individual, partnership, firm, corporation, or joint venture who is sublet part of the Contract by the Contractor.

Subgrade

The top surface of the Roadbed on which subbase, base, surfacing, pavement, or layers of similar materials are placed.

© RH2 Engineering, Inc., 2023

Surety

A company that is bound with the Contractor to ensure performance of the Contract, payment of all obligations pertaining to the Work, and fulfillment of such other conditions as are specified in the Contract, Contract Bond, or otherwise required by law.

Titles (or Headings)

The titles or headings of the sections and subsections herein are intended for convenience of reference and shall not be considered as having any bearing on their interpretation.

Traveled Way

That part of the Roadway made for vehicle travel excluding Shoulders and Auxiliary Lanes.

Work

The provision of all labor, materials, tools, equipment, and everything needed to successfully complete a project according to the Contract.

Working Drawings

Shop drawings, shop plans, erection plans, falsework plans, framework plans, cofferdam, cribbing and shoring plans, bending diagrams for reinforcing steel, or any other supplementary plans or similar data, including a schedule of submittal dates for Working Drawings where specified, which the Contractor must submit to the Engineer for approval.

3. Abbreviations

Whenever the following abbreviations are used on the plans, specifications, proposals and contracts, they shall be construed to mean the words and terms as listed below:

AAA	American Arbitration Association
AAR	Association of American Railroads
AASHTO	American Association of State Highway and Transportation Officials
ACI	American Concrete Institute
AGA	American Gas Association
AGC	Associated General Contractors of America
AI	Asphalt Institute
AIA	American Institute of Architects
AISC	American Institute of Steel Construction
AISI	American Iron and Steel Institute
AITC	American Institute of Timber Construction
AMS	Aerospace Material Specification
ANLA	American Nursery and Landscape Association

© RH2 Engineering, Inc., 2023

ANSI	American National Standards Institute
APA	American Plywood Association
API	American Petroleum Institute
APWA	American Public Works Association
ARA	American Railway Association
AREMA	American Railway Engineering and Maintenance Association
ARTBA	American Road & Transportation Builders Association
ASA	American Standards Association
ASCE	American Society of Civil Engineers
ASLA	American Society of Landscape Architects
ASME	American Society of Mechanical Engineers
ASNT	American Society for Nondestructive Testing
ASTM	American Society for Testing and Materials International
AWPA	American Wood Preservers' Association
AWS	American Welding Society
AWWA	American Water Works Association
CFR	Code of Federal Regulations
CLI	Chain Link Institute
CRAB	County Road Administration Board
CRSI	Concrete Reinforcing Steel Institute
DIPRA	Ductile Iron Pipe Research Association
EEI	Edison Electric Institute
EPA	Environmental Protection Agency
ESAL	Equivalent Single Axle Loads
FHWA	Federal Highway Administration
FOP	Field Operating Procedure
FSS	Federal Specifications and Standards, General Services Administration
HUD	United States Department of Housing and Urban Development
ICEA	Insulated Cable Engineers Association
IEEE	Institute of Electrical and Electronics Engineers
ITE	Institute of Transportation Engineers
IES	Illumination Engineering Society
IMSA	International Municipal Signal Association
LID	Local Improvement District

© RH2 Engineering, Inc., 2023

LPI	Lighting Protection Institute
MSHA	Mine Safety and Health Act
MUTCD	Manual on Uniform Traffic Control Devices
NEC	National Electrical Code
NEMA	National Electrical Manufacturers' Association
NEPA	National Environmental Policy Act
NFPA	National Fire Protection Association
NIST	National Institute of Standards and Technology
NRMCA	National Ready Mix Concrete Association
OMWBE	Office of Minority and Women's Business Enterprises
OSHA	Occupational Safety and Health Administration
PCA	Portland Cement Association
PPI	Plastic Pipe Institute
P/PCI	Precast/Prestressed Concrete Institute
QPL	Qualified Products List
RAM	Request for Approval of Material
RCW	Revised Code of Washington (Laws of the State)
RID	Road Improvement District
SAE	Society of Automotive Engineers
SEPA	State Environmental Policy Act
SOP	Standard Operating Procedure
SSPC	Steel Structures Painting Council
TIB	Transportation Improvement Board
UL	Underwriters Laboratories
ULID	Utility Local Improvement District
UMTA	Urban Mass Transit Administration
WAC	Washington Administrative Code
WAQTC	Western Alliance for Quality Transportation Construction
WCLIB	West Coast Lumber Inspection Bureau
WISHA	Washington Industrial Safety and Health Administration
WRI	Wire Reinforcement Institute
WSDOE	Washington State Department of Ecology
WSDOT	Washington State Department of Transportation
WWPA	Western Wood Products Association

© RH2 Engineering, Inc., 2023

4. Insurance

The Contractor shall procure and maintain for the duration of the Agreement, insurance against claims for injuries to persons or damage to property which may arise from or in connection with the performance of the work hereunder by the Contractor, their agents, representatives, employees or subcontractors.

No Limitation

Contractor's maintenance of insurance, its scope of coverage and limits as required herein shall not be construed to limit the liability of the Contractor to the coverage provided by such insurance, or otherwise limit the City's recourse to any remedy available at law or in equity.

A. Minimum Scope of Insurance

Contractor shall obtain insurance of the types described below:

1. Automobile Liability insurance covering all owned, non-owned, hired and leased vehicles. Coverage shall be written on Insurance Services Office (ISO) form CA 00 01 or a substitute form providing equivalent liability coverage. If necessary, the policy shall be endorsed to provide contractual liability coverage.
2. Commercial General Liability insurance shall be written on ISO occurrence form CG 00 01 and shall cover liability arising from premises, operations, independent contractors, products-completed operations, stop gap liability, personal injury and advertising injury, and liability assumed under an insured contract. The Commercial General Liability insurance shall be endorsed to provide the Aggregate Per Project Endorsement ISO form CG 25 03 11 85 or an equivalent endorsement. There shall be no endorsement or modification of the Commercial General Liability Insurance for liability arising from explosion, collapse or underground property damage. The City shall be named as an insured under the Contractor's Commercial General Liability insurance policy with respect to the work performed for the City using ISO Additional Insured endorsement CG 20 10 10 01 and Additional Insured-Completed Operations endorsement CG 20 37 10 01 or substitute endorsements providing equivalent coverage.
3. Workers' Compensation coverage as required by the Industrial Insurance laws of the State of Washington.

B. Minimum Amounts of Insurance

Contractor shall maintain the following insurance limits:

1. Automobile Liability insurance with a minimum combined single limit for bodily injury and property damage of $1,000,000 per accident.
2. Commercial General Liability insurance shall be written with limits no less than $1,000,000 each occurrence, $2,000,000 general aggregate and $2,000,000 products completed operations aggregate limit.

© RH2 Engineering, Inc., 2023

C. Other Insurance Provision

The Contractor's Automobile Liability and Commercial General Liability insurance policies are to contain, or be endorsed to contain that they shall be primary insurance as respect the City. Any insurance, self-insurance, or insurance pool coverage maintained by the City shall be excess of the Contractor's insurance and shall not contribute with it.

D. Acceptability of Insurers

Insurance is to be placed with insurers with a current A.M. Best rating of not less than A: VII.

E. Verification of Coverage

Contractor shall furnish the City with original certificates and a copy of the amendatory endorsements, including but not necessarily limited to the additional insured endorsement, evidencing the insurance requirements of the Contractor before commencement of the work.

F. Subcontractors

The Contractor shall have sole responsibility for determining the insurance coverage and limits required, if any, to be obtained by subcontractors, which determination shall be made in accordance with reasonable and prudent business practices.

G. Notice of Cancellation

The Contractor shall provide the City and all Additional Insureds for this work with written notice of any policy cancellation, within two business days of their receipt of such notice.

H. Failure to Maintain Insurance

Failure on the part of the Contractor to maintain the insurance as required shall constitute a material breach of contract, upon which the City may, after giving five business days' notice to the Contractor to correct the breach, immediately terminate the contract or, at its discretion, procure or renew such insurance and pay any and all premiums in connection therewith, with any sums so expended to be repaid to the City on demand, or at the sole discretion of the City, offset against funds due the Contractor from the City.

5. Indemnification/ Hold Harmless

Contractor shall defend, indemnify and hold the City, its officers, officials, employees and volunteers harmless from any and all claims, injuries, damages, losses or suits including attorney fees arising out of or resulting from the negligent acts, errors or omissions of the Contractor in performance of this Agreement, except for injuries and damages caused by the sole negligence of the City. In the event of liability for damages arising out of bodily injury to persons or damages to property caused by or resulting from the concurrent negligence of the Contractor and the City, its officers, officials, employees, and volunteers, the Contractor's liability, including the duty and cost to defend, hereunder shall be only to the extent of the Contractor's negligence. It is further specifically and expressly understood that the indemnification provided herein constitutes the Contractor's waiver of immunity under Industrial Insurance, Title 51 RCW, solely for the purposes of this indemnification. This waiver has been mutually negotiated by the parties. The provisions of this section shall survive the expiration or termination of this Agreement.

© RH2 Engineering, Inc., 2023

6. Washington State Sales Tax

The Contractor shall include all Contractor-paid taxes in the unit Bid prices or other Contract amounts. The City will not adjust its payment if the Contractor bases a Bid on a misunderstood tax liability.

The City will pay the retained percentage only if the Contractor has obtained from the State Department of Revenue a certificate showing that all Contract-related taxes have been paid (RCW 60.28.051). The City may deduct from its payments to the Contractor any amount the Contractor may owe the State Department of Revenue, whether the amount owed relates to this Contract or not. Any amount so deducted will be paid into the proper fund.

7. Independent Contractor Relationship

The parties intend that an independent Contractor/City relationship will be created by this Agreement. The City is interested primarily in the results to be achieved; subject to paragraphs herein, the implementation of work and/or services will lie solely with the discretion of the Contractor. No agent, employee, servant or representative of the Contractor shall be deemed to be an employee, agent, servant or representative of the City for any purpose, and the employees of the Contractor are not entitled to any of the benefits the City provides for its employees. The Contractor will be solely and entirely responsible for its acts and for the acts of its agents, employees, servants, subcontractors or representatives during the performance of this Agreement.

In the performance of the work herein contemplated the Contractor is an independent contractor with the authority to control and direct the performance of the details of the work, however, the results of the work contemplated herein must meet the approval of the City and shall be subject to the City's general rights of inspection and review to secure the satisfactory completion thereof.

8. Compliance with Laws

The Contractor shall always comply with all Federal, State, tribal or local laws, ordinances, and regulations that affect Work under the Contract. The Contractor shall indemnify, defend, and hold harmless the City against any claims that may arise because the Contractor (or any employee of the Contractor or Subcontractor or material person) violated a legal requirement.

The Contractor shall be responsible to immediately report to the Engineer any deviation from the contract provisions pertaining to environmental compliance, including but not limited to spills, unauthorized fill in waters of the State including wetlands, water quality standards, noise, air quality, etc.

The Contractor shall be responsible for the safety of all workers and shall comply with all appropriate state safety and health standards, codes, rules, and regulations, including, but not limited to, those promulgated under the Washington Industry Safety and Health Act RCW Chapter 49.17 (WISHA) and as set forth in Title 296 WAC (Department of Labor and

© RH2 Engineering, Inc., 2023

Industries). The Contractor shall likewise be obligated to comply with all federal safety and health standards, codes, rules, and regulations that may be applicable to the Contract Work.

Without usurping the authority of other agencies, the City will cooperate with them in their efforts to enforce legal requirements. Upon awareness of a violation of a legal requirement, the Engineer will notify the Contractor in an effort to achieve compliance. The Engineer may also notify the agency responsible for enforcement if the Engineer deems that action is necessary to achieve compliance with legal requirements. The Engineer will also assist the enforcement agency to obtain Contractor compliance to the extent such assistance is consistent with the provisions of the Contract.

Under certain conditions, the City will adjust payment to compensate for tax changes. First, the changes shall involve federal or state taxes on materials or fuel used in or consumed for the project. Second, the changes shall increase or decrease Contractor-paid taxes by more than $500. For items in the original Contract, the tax change must occur after the Bid opening date. For negotiated Contracts or items in a supplemental agreement, the tax change must take place after the execution date of the Contract or agreement. Within these conditions, the City will adjust compensation by the actual dollar amounts of increase or decrease caused by the tax changes. If the Engineer requests it, the Contractor shall certify in writing that the Contract price does not include any extra amount to cover a possible change in taxes.

The City may audit the records of the Contractor to verify any claim for compensation because of changes in laws or taxes.

B. Bidding and Award of Contract

9. Bidder Qualifications – Previous Experience

To be considered qualified, the Bidder itself must have successfully completed at least three interior and exterior coatings of existing steel reservoirs including full containment and removal of existing coating in the last five years.

10. Examination of Site of Work – Differing Site Conditions

The Contractor shall examine the site of work prior to submitting the bid. During the progress of the Work, if preexisting subsurface or latent physical conditions are encountered at the site, differing materially from those indicated in the Contract, or if preexisting unknown physical conditions of an unusual nature, differing materially from those ordinarily encountered and generally recognized as inherent in the Work provided for in the Contract, are encountered at the site, the party discovering such conditions shall promptly notify the other party in writing of the specific differing site conditions before they are disturbed and before the affected Work is performed.

Upon written notification, the Engineer will investigate the conditions and if he/she determines that the conditions materially differ and cause an increase or decrease in the cost or time required for the performance of any Work under the Contract, an adjustment, excluding loss of anticipated profits, will be made and the Contract modified in writing

© RH2 Engineering, Inc., 2023

accordingly. The Engineer will notify the Contractor of his/her determination whether or not an adjustment of the Contract is warranted.

No Contract adjustment which results in a benefit to the Contractor will be allowed unless the Contractor has provided the required written notice.

The equitable adjustment will be by agreement with the Contractor. However, if the parties are unable to agree, the Engineer will determine the amount of the equitable adjustment.

If the Engineer determines that different site conditions do not exist and no adjustment in costs or time is warranted, such determination shall be final.

If there is a decrease in the costs or time required to perform the Work, failure of the Contractor to notify the Engineer of the differing site conditions shall not affect the City's right to make an adjustment in the costs or time.

No claim by the Contractor shall be allowed unless the Contractor has followed the procedures provided in Sections 46 and 47.

11. Plans and Specifications – Omissions and Discrepancies

The Contractor shall carefully study and compare all drawings, specifications and other instructions, and shall, prior to ordering material or performing work, report in writing to the Engineer any error, inconsistency or omission in respect to design, mode of construction or cost which he or she may discover. If the Contractor, in the course of this study or in the accomplishment of the work, finds any discrepancy between the drawings and the physical condition of the locality as represented in the drawings, or any such errors or omissions in respect to design, mode of construction or cost in drawings or in the layout given by points and instructions, it shall be the Contractor's duty to inform the Engineer immediately in writing and the Engineer shall promptly check the same. Any work done after such discovery, until correction of drawings or authorization of extra work is given, if the Engineer finds that extra work is involved, will be done at the Contractor's risk. If extra work is involved, the procedure shall be as provided in changes in the work.

12. Pre-construction Conference

A Pre-construction Conference shall be held at a time and place fixed by the Engineer after receipt of documents required to follow with the Notice to Award. The Contractor must be prepared for a thorough discussion and review, as well as revision which may be deemed necessary in the opinion of the Engineer, of the following:

- Progress Schedule
- Materials List
- Product Data
- Equipment List
- Job Procedures
- Inspection Procedures

© RH2 Engineering, Inc., 2023

- Plans and Specifications
- Shop Drawings
- Supplemental Drawings
- Schedule of Value of Lump Sum Work
- Subcontractor Lists
- Other Matters Pertaining to Performance of the Work

The Contractor shall file a material and equipment list with the Engineer prior to the Pre-construction Conference. This list shall include the quantity, manufacturer, and model number, if applicable, of materials and equipment to be installed under the contract. This list will be checked by the Engineer as to conformity with the plans and specifications. The Engineer will pass upon the lists with reasonable promptness, making required corrections. The Contractor shall make any required corrections and file two (2) corrected copies with the Engineer within one week after receipt of the required corrections. The Engineer's review and acceptance of the lists shall not relieve the Contractor from responsibility for suitability for the intended purpose nor for deviations from the drawings and specifications unless the Contractor has in writing called the Engineer's attention to such deviations at the time of submittal, and secured the Engineer's written approval for such deviation.

13. Commencement and Prosecution of Work

No Work shall be performed until after the Contractor’s receipt of the Notice to Proceed.

The Contractor shall begin Work within 21-calendar days from the date of execution of the Contract by the City, unless otherwise approved in writing. The Contractor shall diligently pursue the Work to the Physical Completion Date within the time specified in the Contract. Voluntary shutdown or slowing of operations by the Contractor shall not relieve the Contractor of the responsibility to complete the Work within the time(s) specified in the Contract.

C. Scope and Responsibility for Work

14. Status of Engineer

The Contract and Specifications give the Engineer authority over the Work. Whenever it is so provided in this Contract, the decision of the Engineer shall be final: provided, however, that if an action is brought within the time allowed in this Contract challenging the Engineer’s decision, that decision shall be subject to the scope of judicial review provided in such cases under Washington case law.

The Engineer’s decisions will be final on all questions including, but not limited to, the following:

1. Quality and acceptability of materials and Work,
2. Measurement of unit price Work,

© RH2 Engineering, Inc., 2023

3. Acceptability of rates of progress on the Work,
4. Interpretation of Plans and Specifications,
5. Determination as to the existence of changed or differing site conditions,
6. Fulfillment of the Contract by the Contractor,
7. Payments under the Contract including equitable adjustment,
8. Suspension(s) of Work,
9. Termination of the Contract,
10. Determination as to unworkable days, and
11. Approval of Working Drawings.

If the Contractor fails to respond promptly to the requirements of the Contract or orders from the Engineer:

1. The Engineer may use City resources, other contractors, or other means to accomplish the Work, and
2. The City will not be obligated to pay the Contractor, and will deduct from the Contractor's payments any costs that result when any other means are used to carry out the Contract requirements or Engineer's orders.

Nothing in these Specifications or in the Contract requires the Engineer to provide the Contractor with direction or advice on how to do the Work. If the Engineer approves or recommends any method or manner for doing the Work or producing materials, the approval or recommendation shall not:

1. Guarantee that following the method or manner will result in compliance with the Contract,
2. Relieve the Contractor of any risks or obligations under the Contract, or
3. Create any City liability.

15. Inspections and Tests

The Engineer may inspect all Work and materials for conformity with Contract terms. To ensure the Engineer's safety and access during these inspections, the Contractor shall provide any equipment needed, such as walkways, railings, ladders, and platforms.

When the Engineer requests, the Contractor shall (without charge) provide samples of materials used or to be used in the Work. The Engineer may order the Contractor to remove and replace, and bear the cost of doing so, any materials used without inspection.

Any inspections, tests, measurements, or other actions by City employees serve only one purpose: to assure the Engineer that Work, materials, progress rate, and quantities comply

© RH2 Engineering, Inc., 2023

with Contract terms. Such work by City employees shall not relieve the Contractor from doing any Contract-assigned Work or from determining whether Contract requirements are being met. The Contractor shall correct any substandard Work or materials. The Engineer will reject unsuitable Work or materials even though inspected or paid for in a progress estimate.

If the Engineer requests, the Contractor shall remove or uncover any area of the completed Work. After the Engineer inspects it, the Contractor shall restore the area to the standard the Contract requires. The Contractor shall bear the cost of uncovering, removing, and restoring the exposed Work: (a) if it proves unacceptable, or (b) if it was placed without authority or without due notice to the Engineer. The City will pay these costs by agreed price or by force account if the Work proves to be acceptable and the Contractor had performed the original Work with the authority of and due notice to the Engineer.

The Contractor, if advised to do so by the Engineer, shall permit representatives from other agencies to inspect the Work when it is to be done:

1. On any railroad, utility, or facility of a public agency; or
2. To the satisfaction of any federal, state, or municipal agency.

Should the Contractor elect to work more than eight (8) hours per day during the course of the stated Contract time limit, all costs of Engineering and inspection requiring during overtime will be charged to the Contractor, at two (2) times payroll costs. Such charges will be billed directly to the Contractor by the City. In the event the Contractor fails to pay said bill or bills by the 30th day of the month billed, the amount due may be deducted from any payment owed the Contractor or from any funds held in retainage. In addition to the above, where the inspector furnished for the project is an employee of the City, the Contractor shall reimburse the City at two (2) times payroll costs for all inspection time required on holidays which are a part of the City's normal holiday schedule.

16. Time for Completion

The Contractor shall complete all physical Contract Work within the number of “working days” stated in the instructions to bidders completion time or as extended by the Engineer in accordance with Section 49. Every day will be counted as a “working day” unless it is a nonworking day or an Engineer determined unworkable day. A nonworking day is defined as a Saturday, a Sunday, a whole or half day on which the Contract specifically prohibits Work on the critical path of the Contractor’s approved progress schedule, or one of these holidays: January 1, the third Monday of January, the third Monday of February, Memorial Day, Juneteenth, July 4, Labor Day, November 11, Thanksgiving Day, the day after Thanksgiving, Christmas Eve, and Christmas Day. When any of these holidays fall on a Sunday, the following Monday shall be counted a nonworking day. When the holiday falls on a Saturday, the preceding Friday shall be counted a nonworking day.

An unworkable day is defined as a half or whole day the Engineer declares to be unworkable because of weather or conditions caused by the weather that prevents satisfactory

© RH2 Engineering, Inc., 2023

and timely performance of the Work shown on the critical path of the Contractor's approved progress schedule. Other conditions beyond the control of the Contractor may qualify for an extension of time in accordance with Section 48.

Contract time shall begin on the first day of work as indicated on the Notice to Proceed. Each working day shall be charged to the Contract as it occurs, until the Contract Work is physically complete. If Substantial Completion has been granted and all the authorized working days have been used, charging of working days will cease. Each week the Engineer will provide the Contractor a statement that shows the number of working days: (1) charged to the Contract the week before; (2) specified for the Physical Completion of the Contract; and (3) remaining for the Physical Completion of the Contract. The statement will also show the nonworking days and any half or whole day the Engineer declares as unworkable. Within 10-calendar days after the date of each statement, the Contractor shall file a written protest of any alleged discrepancies in it. To be considered by the Engineer, the protest shall be in sufficient detail to enable the Engineer to ascertain the basis and amount of time disputed. By not filing such detailed protest in that period, the Contractor shall be deemed as having accepted the statement as correct.

The Engineer will give the Contractor written notice of the Physical Completion Date for all Work the Contract requires. That date shall constitute the Physical Completion Date of the Contract, but shall not imply the City's acceptance of the Work or the Contract.

17. Progress Schedule

The Contractor shall submit Progress Schedules and Schedule Updates to the Engineer for approval. Schedules shall show Work that complies with all time and order of Work requirements in the Contract. The schedule may be a critical path method (CPM) schedule, bar chart, or other standard schedule format. Regardless of which format is used, the schedule shall identify the critical path. Schedules shall meet these General Requirements and provide the following information:

1. Include all activities necessary to physically complete the project.
2. Show the planned order of Work activities in a logical sequence.
3. Show durations of Work activities in working days.
4. Show activities in durations that are reasonable for the intended Work.
5. Define activity durations in sufficient detail to evaluate the progress of individual activities on a daily basis.
6. Show the Physical Completion of all Work within the authorized Contract time.

The City allocates its resources to a Contract based on the total time allowed in the Contract. The City may accept a Progress Schedule indicating an early Physical Completion Date but cannot guarantee the City's resources will be available to meet an accelerated schedule. No additional compensation will be allowed if the Contractor is not able to meet

© RH2 Engineering, Inc., 2023

their accelerated schedule due to the unavailability of City's resources or for other reasons beyond the City's control.

If the Engineer determines that the Progress Schedule or any necessary Schedule Update does not provide the required information, then the schedule will be returned to the Contractor for correction and resubmittal.

The Engineer's approval of any schedule shall not transfer any of the Contractor's responsibilities to the City. The Contractor alone shall remain responsible for adjusting forces, equipment, and Work schedules to ensure completion of the Work within the time(s) specified in the Contract.

The Engineer may request a Schedule Update when any of the following events occur:

1. The project has experienced a change that affects the critical path.
2. The sequence of Work is changed from that in the approved schedule.
3. The project is significantly delayed.
4. Upon receiving an extension of Contract time.

18. Alternate Designs

The Contractor shall not deviate from the Plans and Specifications without written approval from the Engineer. In the event that the Contractor shall request, or submit, an alternate design, or designs for some portions of his work, the Engineer will consider such alternate designs with reasonable promptness. Such request for either a design review from alternate plans submitted by the Contractor, or request for a redesign initiated by the Contractor as set forth above shall be made in writing to the Engineer. When the Contractor submits plans for an alternate design it shall be in the form of reproducible drawings.

Provided that such proposed alternate design or requested redesign appears reasonable and satisfactory to the Engineer, the Engineer will perform an engineering review of the proposed alternate design or if requested by the Contractor, the Engineer will perform an engineering redesign of the work to assure its compatibility within the framework of the complete operating unit or system ready for use between the Contract limits.

The cost of engineering review of the proposed alternate, or the cost of an engineering redesign as requested by the Contractor will be billed to the Contractor by the Engineer at the rate of two times the Engineer's direct payroll costs, plus direct expenses directly attributable to the work.

19. Shop Drawings

The Contractor shall submit supplemental Working Drawings as required for the performance of the Work. Except as noted, all drawings and other submittals shall be delivered directly to the Engineer. The drawings shall be provided far enough in advance of actual need to allow for the review process by the City or other agencies. This may involve resubmittals because of revisions or rejections. After a plan or drawing has been approved

© RH2 Engineering, Inc., 2023

and returned to the Contractor, all changes that the Contractor proposes shall be submitted to the Engineer for review and approval.

The Contractor shall obtain the Engineer's written approval of the drawings before proceeding with the Work they represent. This approval shall neither confer upon the City nor relieve the Contractor of any responsibility for the accuracy of the drawings or their conformity with the Contract. The Contractor shall bear all risk and all costs of any Work delays caused by nonapproval of these drawings or plans.

Unit Bid prices shall cover all costs of Working Drawings.

20. Ownership of Drawings

All drawings, specifications and copies thereof prepared or furnished by the City are its property. They are not to be used on other work, and with the exception of the signed Contract set, are to be returned upon completion of the work.

21. Surveys, Permits, Points, and Instructions

The City shall furnish all property boundary surveys unless otherwise specified. Permits, permission under franchises, licenses and bonds of a temporary nature necessary for and during the prosecution of the work, and inspection fees in connection therewith, shall be secured and paid for by the Contractor. Where the City is required to secure such permits, permission under franchises, licenses and bonds and pay the fees, the costs will be incurred by the City. The following permits are anticipated to be needed for this project:

City provided:

- Critical Areas
- SEPA
- Commercial Building Permit

Contractor Provided, but not limited to:

- L&I
- Business License
- Haul Route and Traffic Control Plan
- Construction SWPP

The Contractor shall provide reasonable and necessary opportunities and facilities for setting points and making measurements by the Engineer as set forth in the special provisions. The Contractor shall not proceed with the work until timely demand in writing has been made upon the Engineer for, and the Contractor has received from the Engineer, such points and instructions. The work shall be done in strict conformity with such points and instructions.

Contractor shall preserve benchmarks, reference points and stakes, and, in case of destruction or removal thereof for any reason, Contractor is responsible for the resulting costs for replacement and shall be responsible for any mistakes and loss or damage arising therefrom which may be caused by the absence, destruction, removal or disturbance thereof.

© RH2 Engineering, Inc., 2023

22. Records Retention

A. The Contractor shall keep at least one copy of the of the plans and specifications constantly accessible at the construction site.

B. Where shop drawings or as-builts are required to be submitted for acceptance, one copy of the approved shop drawings and as-builts shall be kept constantly accessible at the construction site.

C. All records must be retained by the Contractor for a period of three years following acceptance of the Contract Work. All records shall be available at reasonable times and places for inspection by authorized representatives of the City.

23. Final Inspection and Acceptance

Prior to the City's contract acceptance, all materials and completed work are subject to final inspection by the Engineer. The Engineer will not make the final inspection until the physical Work required by the Contract, including final cleanup and all extra Work ordered by the Engineer, has been completed.

The Engineer may require and shall have the right to subject all machinery and equipment and work to such inspection, as in his/her opinion, will assist in determining whether the Contract has been performed in accordance with the Contract Documents. All such tests shall be at the expense of the Contractor. In addition, all easements shall be restored and signed releases secured from property owners shall be submitted to the Engineer by the Contractor.

Failure of the Contractor to perform all the obligations under the Contract shall not bar the City from unilaterally accepting the Contract as provided in Section 54. Progress estimates or payments shall not be construed as acceptance of any Work under the Contract.

The Contractor agrees that neither completion nor final acceptance shall relieve the Contractor of the responsibility to indemnify, defend, and protect the City against any claim or loss resulting from the failure of the Contractor (or the Subcontractors or lower tier subcontractors) to pay all laborers, mechanics, Subcontractors, materialpersons, or any other person who provides labor, supplies, or provisions for carrying out the Work or for any payments required for unemployment compensation under Title 50 RCW or for industrial insurance and medical aid required under Title 51 RCW.

Final acceptance shall not constitute acceptance of any unauthorized or defective work or material. The City shall not be barred from requiring the Contractor to remove, replace, repair, or dispose of any unauthorized or defective work or material or from recovering damages for any such work or material.

The City shall have the right to take possession of and use completed or partially completed portions of the work, notwithstanding that the time may not have expired for completing the entire work. Such taking possession and use shall not be deemed to be completion of the Contract in respect to such work nor shall the same be deemed to be any acceptance of any work not completed in accordance with the Contract Documents.

© RH2 Engineering, Inc., 2023

24. Assignment and Subcontracting

The Contractor shall not assign all or any part of the Work unless the Engineer approves in writing. The Engineer will not approve any proposed assignment that would relieve the original Contractor or Surety of responsibility under the Contract.

Money due (or that will become due) to the Contractor may be assigned. If given written notice, the City will honor such an assignment to the extent the law permits. But the assignment shall be subject to all setoffs, withholdings, and deductions required by law and the Contract.

The Contractor shall not subcontract Work unless the Engineer approves in writing. Each request to subcontract shall be on the form the Engineer provides. If the Engineer requests, the Contractor shall provide proof that the Subcontractor has the experience, ability, and equipment the Work requires. The Contractor shall require each Subcontractor to comply with prevailing wage laws and to furnish all certificates and statements required by the Contract.

Prior to subcontracting any Work, the Contractor shall verify that every first tier Subcontractor meets the responsibility criteria stated below at the time of subcontract execution. The Contractor shall include these responsibility criteria in every subcontract, and require every Subcontractor to:

1. Possess any electrical contractor license required by 19.28 RCW or elevator contractor license required by 70.87 RCW, if applicable;
2. Have a certificate of registration in compliance with chapter 18.27 RCW;
3. Have a current State unified business identifier number;
4. If applicable, have
    a. Industrial insurance coverage for the bidder's employees working in Washington (Title 51 RCW);
    b. An employment security department number (Title 50 RCW);
    c. A State excise tax registration number (Title 82 RCW);
5. Not be disqualified from bidding on any public works contract under RCW 39.06.010 or RCW 39.12.065(3).
6. Verify these responsibility criteria for every lower tier subcontractor at the time of subcontract execution; and,
7. Include these responsibility criteria in every lower tier subcontract.

The Engineer will approve the request to subcontract only if satisfied with the proposed Subcontractor's record, equipment, experience, and ability. Approval to subcontract shall not:

© RH2 Engineering, Inc., 2023

1. Relieve the Contractor of any responsibility to carry out the Contract,
2. Relieve the Contractor of any obligations or liability under the Contract and the Contractor's bond,
3. Create any contract between the City and the Subcontractor, or
4. Convey to the Subcontractor any rights against the City.

If dissatisfied with any part of the subcontracted Work, the Engineer may request in writing that the Subcontractor be removed. The Contractor shall comply with this request at once and shall not employ the Subcontractor for any further Work under the Contract.

The Contractor will be solely responsible for any additional costs involved in paying retainage to the Subcontractors prior to total project completion. Those costs shall be incidental to the respective Bid items.

25. Work on City Property

Workers shall wear proper personal safety equipment, hardhats, fluorescent vests, etc., in accordance with City, WISHA and OSHA regulations.

26. Existing Utilities or Obstructions

The Contractor's work shall be confined to the City's premises, including easements and construction permit limits, whenever possible. The Contractor shall not enter upon or place materials on other property except by written consent of the individual owners, and shall defend, indemnify, and hold the City harmless from all suits and actions of every kind and description that might result from the Contractor's use of property other than that of the City.

The Contractor shall protect all private and public utilities from damage resulting from the Work. Among others, these utilities include: telephone, telegraph, and power lines; pipelines, sewer and water lines; railroad tracks and equipment; and highway lighting and signing systems, and intelligent transportation systems (ITS). All costs required to protect public and private utilities shall be at the Contractor's expense, except as provided otherwise in this section.

Chapter 19.122 of the Revised Code of Washington (RCW) relates to underground utilities. In accordance with this RCW, the Contractor shall call the One-Number Locator Service for field location of utilities. If no locator service is available for the area, notice shall be provided individually to those owners of utilities known to, or suspected of, having underground facilities within the area of the proposed excavation.

Existing utilities indicated anywhere on the drawings have been plotted from the best information available to the Engineer. Neither the City nor the Engineer guarantees the accuracy or completeness of this information and assumes no responsibility for improper locations or failure to show utility locations on the construction plans; and it is to be understood that other above- ground or underground facilities not shown on the drawings may be encountered during the course of the work.

© RH2 Engineering, Inc., 2023

If the Work requires removing or relocating a utility, the Contractor shall have the responsibility to remove or relocate in accordance with the Plans and Specifications. New utility construction shall be performed according to the appropriate Contract requirements.

To ease or streamline the Work for its own convenience, the Contractor may desire to ask utility owners to move, remove, or alter their equipment in ways other than those listed in the Plans or Special Provisions. The Contractor shall make the arrangements and pay all costs that arise from work performed by the utility owner at the Contractor's request. Two weeks prior to implementing any such utility work, the Contractor shall submit plans and details to the Project Engineer for approval describing the scope and schedule of all work performed at the Contractor's request by the utility owner.

If the Contract provides notice that utility work (including furnishing, adjusting, relocating, replacing, or constructing utilities) will be performed by others during the prosecution of the Work, the Special Provisions will establish the utility owner's anticipated completion. The Contractor shall carry out the Work in a way that will minimize interference and delay for all forces involved. Any costs incurred prior to the utility owners anticipated completion (or if no completion is specified, within a reasonable period of time) that results from the coordination and prosecution of the Work regarding utility adjustment, relocation, replacement, or construction shall be at the Contractor's expense.

When others delay the Work through late performance of utility work, the Contractor shall adhere to the requirements of Section 46. The City will either suspend Work, or order the Contractor to coordinate the Work with the work of the utility owner. When ordered to coordinate the Work with the work of the utility owner, the Contractor shall prosecute the Work in a way that will minimize interference and delay for all forces involved.

The Contractor shall take adequate precautions to protect existing lawns, trees and shrubs outside rights-of-way, sidewalks, curbs, pavements, utilities, adjoining property, and structures, and to avoid damage thereto. The Contractor shall, at its own expense, completely repair any damage thereto caused by his operations to the satisfaction of the Engineer, except as otherwise provided in other sections of the Contract.

27. Replacing Improvements

Whenever it is necessary in the course of construction to remove or disturb culverts, driveways, roadways, pipelines, property stakes or other existing improvements, without limiting the generality thereof and whether on private or public property, they shall be replaced to a condition equal to that existing before they were so removed and disturbed, and all such costs for this replacement shall be borne by the Contractor and considered incidental to the construction and work covered by these specifications unless specific unit or lump sum pay items have been established in the Contract to cover any of the above work.

28. Traffic Maintenance and Protection

© RH2 Engineering, Inc., 2023

The following special provisions shall apply to traffic regulation during the extent of this Contract:

There shall be at all times adequate vehicle and pedestrian access to and egress from the properties adjacent to the Project.

During non-working hours, the Contractor shall keep the existing traffic lanes clear for traffic without interference from his operations including all approaches and intersections.

Where hazardous conditions exist, proper signing and barricading shall be provided by the Contractor. Whenever directed by the Engineer, supplemental signs and barricades, including lanterns and/or high rise warning devices, shall be provided at the expense of the Contractor.

Before the beginning of his operations, the Contractor shall notify affect public agencies, such as East Pierce Fire & Rescue, the Bonney Lake Police Department, and the Sumner and/or White River School Districts by phone or in writing before the beginning of his operations so that these agencies may re-route their emergency and service vehicles around the construction zone.

Any temporary asphalt concrete pavement, crushed surfacing or gravel base required for maintaining traffic during the life of this Contract shall be furnished and placed by the Contractor immediately upon request by the Engineer in amounts designated and shall be at no additional cost to the City.

Continuous one-way traffic shall be maintained during working hours at all times during the project unless a detour plan has been submitted and approved by the City Engineer at least 24 hours in advance. The City Engineer shall only approve detours which can be shown to not significantly impede traffic flow, cause unreasonable amounts of delay or cause a significant traffic safety problem. All barricades, signs and warning devices necessary for detours shall be furnished, installed and maintained by the Contractor. The Contractor shall be held liable for all claims resulting from improper installation and/or maintenance of these traffic control devices.

The Contract shall defend, indemnify, and hold the City harmless from any claims arising from accidents or damages caused by the Contractor's failure to comply with traffic and public safety regulations during the construction period.

If operations of the Contractor are shown to significantly impede traffic flow during peak hours of traffic, the Engineer shall have the authority to restrict the Contractor to time of operation on the street.

29. Separate Contract – Interference with Other Contractors

The City may perform other work at or near the site, including any material site, with other forces than those of the Contractor. This work may be done with or without a contract. If such work takes place within or next to this project, the Contractor shall cooperate with all

© RH2 Engineering, Inc., 2023

other contractors or forces. The Contractor shall carry out Work under this project in a way that will minimize interference and delay for all forces involved. The Engineer will resolve any disagreements that may arise among the contractors or the Contractor and the City over the method or order of doing the Work. The Engineer's decision in these matters shall be final.

The coordination of the Work shall be taken into account by the Contractor as part of the site investigation and any resulting costs shall be incidental and included within the unit Bid prices in the Contract.

30. Cleanup

The Contractor shall perform final cleanup as provided in this section to the Engineer's satisfaction. The Engineer will not establish the Physical Completion Date until this is done. The City rights-of-way, material sites, and all ground the Contractor occupied to do the Work shall be left neat and presentable. The Contractor shall:

1. Remove all rubbish, surplus materials, discarded materials, falsework, camp buildings, temporary structures, equipment, and debris; and
2. Deposit in embankments, or remove from the project, all unneeded, oversized rock left from grading, surfacing, or paving.

The Contractor shall not remove warning, regulatory, or guide signs unless the Engineer approves.

D. Materials and Equipment

31. Materials and Equipment Used in Work

The Contractor shall provide and pay for all materials, water, tools, equipment, light, power, transportation, and other facilities necessary for the execution and completion of the work, except as otherwise stipulated in the Contract Documents. At the Engineer's request, the Contractor shall provide an operating and maintenance manual for each model or type of mixing, placing, or processing equipment before using it in the Work. The Contractor shall also provide test instruments to confirm whether the equipment meets operating requirements, such as vibration rate, revolutions-per-minute, or any other requirements.

The Engineer will reject equipment that repeatedly breaks down or fails to produce results within the required tolerances. The Contractor shall have no claim for additional payment or for extension of time due to rejection and replacement of any equipment. The Contractor shall keep all machinery and equipment in good, workable condition. It shall be adequate for its purpose and used by competent operators.

© RH2 Engineering, Inc., 2023

32. Materials and Equipment Incorporated into Work

A. All equipment, materials, and articles incorporated into the permanent Work:

1. Shall be new, unless the Contract permits otherwise;
2. Shall meet the requirements of the Contract and be approved by the Engineer;
3. May be inspected or tested at any time during their preparation and use; and
4. Shall not be used in the Work if they become unfit after being previously approved.

The Contractor shall furnish to the City any guarantee or warranty furnished as a customary trade practice in connection with the purchase of any equipment, materials, or items incorporated into the project. The Contractor shall also provide to the Engineer all owners manuals and operating instructions furnished by the equipment or material manufacturer.

33. Materials and Equipment Furnished by City

The Contractor shall protect materials against damage from careless handling, from exposure to weather, from mixture with foreign matter, and from all other causes. The Engineer will reject and refuse to test materials improperly handled or stored.

The Contractor shall repair, replace, or make good all City-provided materials that are damaged or lost due to the Contractor's operation or while in the Contractor's possession, at no expense to the City.

The Contractor shall bear the risk of loss or damage for all finished or partially finished work until the entire Contract is accepted by the City.

34. Cutting and Fitting

The Contractor shall do all cutting and fitting of his work that may be required to make its several parts come together properly, and fit it to receive or be received by work of other contractors shown or reasonably implied by the drawings and specifications for the completed structure. The Contractor shall restore all surfaces damaged by cutting and fitting as the Engineer may direct.

35. Determination of "Or Equal"

The Engineer shall be the sole judge in the question of "or equal" of any supplies or materials proposed by the Contractor. The Contractor shall pay the City the cost of tests and evaluations by the Engineer to determine acceptability of alternates proposed by the Contractor, in accordance with the established rates of the Engineer for time and expense work, the total cost of which may be offset by the City against the Contract price.

The Engineer may accept certain materials on the basis of a Manufacturer's Certificate of Compliance as an alternative to material inspection and testing. The Contractor may request, in writing, authority from the Engineer to install such materials prior to submitting the required certification; however, no payment will be made for the Work in the absence of an

© RH2 Engineering, Inc., 2023

acceptable Manufacturer's Certificate of Compliance. The City reserves the right to deny the request for good cause.

The Manufacturer's Certificate of Compliance must identify the manufacturer, the type and quantity of material being certified, the applicable Specifications being affirmed, and the signature of a responsible corporate official of the manufacturer and include supporting mill tests or documents. A Manufacturer's Certificate of Compliance shall be furnished with each lot of material delivered to the Work and the lot so certified shall be clearly identified in the certificate.

All materials used on the basis of a Manufacturer's Certificate of Compliance may be sampled and tested at any time. Any material not conforming to the requirements will be subject to rejection whether in place or not. The City reserves the right to refuse to accept materials on the basis of a Manufacturer's Certificate of Compliance.

36. Royalties and Patents

The Contractor shall defend, indemnify, and hold the City harmless against all claims brought against the City by reason of infringement of patent rights or licenses on any materials, machine, appliance or process he may use on the work or incorporate into the finished job, except where specifically exempted by special provisions. Prices named in the proposal shall include payment of royalties, if any.

E. Workers

37. Workers and Supervision

At the Engineer's written request, the Contractor shall immediately remove and replace any incompetent, careless, or negligent employee. Noncompliance with the Engineer's request to remove and replace personnel at any level shall be grounds for terminating the Contract.

Either the Contractor in person or an authorized representative shall remain on site whenever the Work is underway. Before the Work begins, the Contractor shall name in writing an experienced superintendent who understands the Contract and is able to supervise the Work. This superintendent shall have full authority to represent and act for the Contractor. Any superintendent who repeatedly fails to follow the Engineer's written or oral orders, directions, instructions, or determinations, shall be subject to removal from the project. Upon the written request of the Engineer, the Contractor shall immediately remove such superintendent and name a replacement in writing. Competent supervisors experienced in the task being performed shall continuously oversee the Contract Work.

The Contractor shall take all necessary precautions for the safety of employees on the work site and shall comply with all applicable provisions of federal, state and municipal safety laws and building codes. The Contractor shall erect and properly maintain, at all times, as required by the conditions and progress of the work, all necessary safeguards for protection of workers and the public; shall post danger signs warning against known or

© RH2 Engineering, Inc., 2023

unusual hazards; and shall designate a responsible member of the organization on the construction site whose duty shall be the prevention of accidents. The name and position of such person so designated shall be reported in writing to the Engineer by the Contractor.

Necessary sanitation conveniences for the use of workers on the job properly secluded from public observation shall be provided and maintained by the Contractor.

38. Payment of Prevailing Wages

This Contract is subject to the minimum wage requirements of RCW 39.12 and to RCW 49.28 (as amended or supplemented).

The Contractor, any Subcontractor, and all individuals or firms required by RCW 39.12, or WAC 296-127 to pay minimum prevailing wages, shall not pay any worker less than the minimum hourly wage rates and fringe benefits required by RCW 39.12. Higher wages and benefits may be paid.

By including the hourly minimum rates for wages and fringe benefits in the Contract Provisions, the City does not imply that the Contractor will find labor available at those rates. The Contractor shall be responsible for any amounts above the minimums that will actually have to be paid. The Contractor shall bear the cost of paying wages above those shown in the Contract Provisions.

If employing labor in a class not listed in the Contract Provisions, the Contractor shall request a determination of the correct wage and benefits rate for that class and locality from the Industrial Statistician, Washington State Department of Labor and Industries (State L&I), and provide a copy of those determinations to the Engineer.

The Contractor shall ensure that any firm (Supplier, Manufacturer, or Fabricator) that falls under the provisions of RCW 39.12 because of the definition “Contractor” in WAC 296-127-010, complies with all the requirements of RCW 39.12.

The Contractor shall be responsible for compliance by all firms (Subcontractors, lower tier subcontractors, Suppliers, Manufacturers, or Fabricators) engaged in any part of the Work necessary to complete this Contract. Therefore, should a violation of this subsection occur by any firm that is providing Work or materials for completion of this Contract whether directly or indirectly responsible to the Contractor, the City will take action against the Contractor, as provided by the provisions of the Contract, to achieve compliance, including but not limited to, withholding payment on the Contract until compliance is achieved.

In the event the City has an error (omissions are not errors) in the listing of the hourly minimum rates for wages and fringe benefits in the Contract Provisions, the Contractor, any Subcontractor, any lower tier subcontractor, or any other firm that is required to pay prevailing wages, shall be required to pay the rates as determined to be correct by State L&I. A change order will be prepared to ensure that this occurs. The City will reimburse the

© RH2 Engineering, Inc., 2023

Contractor for the actual cost to pay the difference between the correct rates and the rates included in the Contract Provisions, subject to the following conditions:

1. The affected firm relied upon the rates included in the Contract Provisions to prepare its Bid and certifies that it did so;
2. The allowable amount of reimbursement will be the difference between the rates listed and rates later determined to be correct plus only appropriate payroll markup the employer must pay, such as social security and other payments the employer must make to the Federal or State Government;
3. The allowable amount of reimbursement may also include some overhead cost, such as the cost for bond, insurance, and making supplemental payrolls and new checks to the employees because of underpayment for previously performed Work; and
4. Profit will not be an allowable markup.

Firms that anticipated, when they prepared their Bids, paying a rate equal to, or higher than, the correct rate as finally determined will not be eligible for reimbursement.

In a location acceptable to State L&I, the Contractor shall ensure the following is posted:

1. One copy of the approved "Statement of Intent to Pay Prevailing Wages" for the Contractor, each Subcontractor, each lower tier subcontractor, and any other firm (Supplier, Manufacturer, or Fabricator) that falls under the provisions of RCW 39.12 because of the definition of "Contractor" in WAC 296-127-010;
2. One copy of the prevailing wage rates for the project;
3. The address and telephone number of the Industrial Statistician for State L&I (along with notice that complaints or questions about wage rates may be directed there); and

If labor and management cannot agree in a dispute over the proper prevailing wage rates, the Contractor shall refer the matter to the Director of State L&I. The Director's decision shall be final, conclusive, and binding on all parties.

On forms provided by the Industrial Statistician of State L&I, the Contractor shall submit to the Engineer the following for itself and for each firm covered under RCW 39.12 that provided Work and materials for the Contract:

1. A copy of an approved "Statement of Intent to Pay Prevailing Wages" State L&I's form number F700-029-000. The City will make no payment under this Contract for the Work performed until this statement has been approved by State L&I and a copy of the approved form has been submitted to the Engineer.
2. A copy of an approved "Affidavit of Prevailing Wages Paid," State L&I's form number F700-007-000. The City will not release to the Contractor any funds retained under RCW 60.28.011 until all of the "Affidavit of Prevailing Wages Paid" forms

© RH2 Engineering, Inc., 2023

have been approved by State L&I and a copy of all the approved forms have been submitted to the Engineer.

The Contractor shall be responsible for requesting these forms from State L&I and for paying any approval fees required by State L&I.

39. Worker Benefits

The Contractor shall make all payments required for unemployment compensation under Title 50 RCW and for industrial insurance and medical aid required under Title 51 RCW. If any payment required by Title 50 or Title 51 is not made when due, the City may retain such payments from any money due the Contractor and pay the same into the appropriate fund. Such payment will be made only after giving the Contractor 15 days prior written notice of the City's intent to disburse the funds to the Washington State Department of Labor and Industries or Washington State Employment Security Department as applicable. The payment will be made upon expiration of the 15-calendar day period if no legal action has been commenced to resolve the validity of the claim. If legal action is instituted to determine the validity of the claim prior to the expiration of the 15-day period, the City will hold the funds until determination of the action or written settlement agreement of the appropriate parties.

The Contractor shall include in the various items in the Bid Proposal all costs for payment of unemployment compensation and for providing either or both of the insurance coverages. The Contractor will not be entitled to any additional payment for: (1) failure to include such costs, or (2) determinations made by the U.S. Department of Labor or the Washington State Department of Labor and Industries regarding the insurance coverage.

The Public Works Contract Division of the Washington State Department of Labor and Industries will provide the Contractor with applicable industrial insurance and medical aid classification and premium rates. After receipt of a *Revenue Release* from the Washington State Department of Revenue, the City will verify through the Department of Labor and Industries that the Contractor is current with respect to the payments of industrial insurance and medical aid premiums.

F. Payment

40. Application for Payment

A. By the final working day of each month, the Contractor shall submit to the Engineer an itemized application for payment, supported to the extent required by the Engineer by receipts or other vouchers showing payment for materials and labors, payments to subcontractors, and such other evidence of the Contractor's right to payment as the Engineer may direct.

B. The Contractor shall be entitled to monthly progress payments corresponding to the stage of the work. Progress estimates will be prepared by the Contractor and reviewed by the Engineer according to the schedule provided by the City. These shall be based upon an approximate estimate of quantities of work completed and

© RH2 Engineering, Inc., 2023

considered acceptable, as extended by the unit prices established in the Contract or as provided by the schedule of lump sum payments. The City shall deduct from each monthly progress payment an amount of retainage provided for by law and by this Contract and also for any charges against the Contractor authorized by this contract.

C. Cost of materials, properly stored, protected and insured at the site of the work will be paid on monthly estimates only when provided for in the special provisions, and then only for specific materials listed therein for partial payment. Payment for materials will not constitute acceptance, and any faulty material will be condemned although payment may have been made for same in the estimates. All materials for which costs are allowed under this subparagraph must be substantiated by written documentation from the material supplier that the material has been paid for.

D. Quantities used for progress estimates shall be considered only as approximate and provisional, and shall be subject to recalculation, adjustment and correction by the Engineer in subsequent progress estimates and in final estimates. Inclusion of any quantities in progress estimates, or failure to disapprove the work at the time of progress estimates, shall not be construed as acceptance of corresponding work or materials.

E. Retained percentages shall be withheld by the City according to Chapter 60.28 RCW.

41. Schedule for Values of Lump Sum Work

If payments are to be made on lump sum items, the Contractor shall submit a schedule of values of the various parts of work, including quantities, aggregating the total sum of the contract, made out in such form as the Engineer may require, and if required, supported by such evidence as to its correctness as the Engineer may direct. This schedule, when approved by the Engineer, shall be used as the basis for certificates for payments for lump sum work, the Contractor shall submit estimates of the percentage of work completed, and payment will be based upon the schedule of values for lump sum work.

42. Payments Withheld

The City may withhold any payment or portion of payment or recover any payment theretofore made, to such extent as may be necessary to protect itself from loss on account of:

A. Defective work not remedied.

B. Liquidated damages, inspection and engineering charges, or other claims against the Contractor by the City.

C. Failure of the Contractor to furnish invoices to support application for payment for materials not incorporated in the work but delivered and suitably stored at the site.

D. Damages to another contractor.

E. Expenses, including court costs and legal fees, whether or not incident to suit, incurred by the City due to any default of the Contractor.

F. Failure to furnish any documents required by the City to process payments.

© RH2 Engineering, Inc., 2023

G. Force Account

The terms of the Contract or of a change order may call for Work or material to be paid for by force account. If so, then the objective shall be to reimburse the Contractor for all costs associated with the Work, including costs of labor, small tools, supplies, equipment, specialized services, materials, applicable taxes and overhead and to include a profit commensurate with those costs. The amount to be paid shall be determined as described in this section.

1. **For Labor:** Labor reimbursement calculations shall be based on a "Project Labor List" (List,) prepared and submitted by the Contractor and by any Subcontractor before that firm commences force account Work. Once a List is approved by the Engineer, it shall be used to calculate force account labor payment until a new List is submitted and approved. The Engineer may compare the List to payrolls and other documents and may, at any time, require the Contractor to submit a new List. The Contractor may submit a new List at any time without such a requirement. Prior payment calculations shall not be adjusted as a result of a new List.

   To be approved, the List must be accurate and meet the requirements of this section. It shall include regular time and overtime rates for all employees (or work classifications) expected to participate in force account Work. The rates shall include the basic wage and fringe benefits, the current rates for Federal Insurance Compensation Act (FICA), Federal Unemployment Tax Act (FUTA) and State Unemployment Tax Act (SUTA), the company's present rates for Medical Aid and Industrial Insurance premiums and the planned payments for travel and per diem compensation.

   In the event that an acceptable initial List or requested revised List is not received by the time that force account calculations are begun, the Engineer will develop a List unilaterally, utilizing the best data available, that will be used until a Contractor's List is received and approved. Again, prior calculations, prepared using the Engineer's List, will not be revised as a result of differences with the Contractor's List.

   In addition to compensation for direct labor costs defined above, the City will pay Contractor 29-percent of the sum of the costs calculated for labor reimbursement to cover project overhead, general company overhead, profit, bonding, insurance, Business & Occupation tax, and any other costs incurred. This amount will include any costs of safety training and health tests, but will not include such costs for unique force account Work that is different from typical Work and which could not have been anticipated at time of Bid.

2. **For Materials:** The City will reimburse invoice cost for Contractor-supplied materials. For the purpose of this provision, "Materials" shall include those items incorporated into the Work, supplies used during the Work and items consumed. This

© RH2 Engineering, Inc., 2023

cost shall include freight and handling charges and applicable taxes. Before Work is started, the Engineer may require the Contractor to obtain multiple quotations for the materials to be utilized and select the vendor with prices and terms most advantageous to the City.

The City will provide a list of the types and quantities of Contractor-supplied materials witnessed by the City as being utilized in force account Work. The list will be furnished promptly after the material is incorporated, on a daily basis unless agreed otherwise. The Contractor may propose corrections to the list and will supply prices for the materials and other costs and return the list to the City. To support the prices, the Contractor shall attach valid copies of vendor invoices. If invoices are not available for materials from the Contractor's stocks, the Contractor shall certify actual costs (at a reasonable level) by affidavit. The Engineer will review the prices and any Contractor-proposed corrections and, if reasonable, approve the completed list. Once approved, the prices will be utilized in the calculation of force account reimbursement for materials.

If, in the case of non-invoiced materials supported by Contractor affidavit, the price appears to be unreasonable, the Engineer will determine the cost for all or part of those materials, utilizing the best data available.

The City reserves the right to provide materials. In this case, the Contractor will receive no payment for any costs, overhead, or profit arising from the value of the materials themselves. Additional costs to handle and place the Agency-furnished material shall be compensated as described in this Specification.

In addition to compensation for direct materials cost, the City will pay the Contractor 21-percent of the sum of the costs calculated for materials reimbursement to cover project overhead, general company overhead, profit, bonding, insurance, Business & Occupation tax, and any other costs incurred.

3. **For Equipment:** The City will reimburse the Contractor for the cost of equipment utilized in the Work. The equipment provided by the Contractor shall be of modern design and in good working condition. For the purpose of this provision, "provided" shall mean that the equipment is owned (either through outright ownership or through a long-term lease) and operated by the Contractor or Subcontractor or that the equipment is rented and operated by the Contractor or Subcontractor. Equipment that is rented with operator shall not be included here, but shall be considered a service and addressed according to subsection 4 of this provision.

   The amount of payment for any Contractor-owned equipment that is utilized shall be determined according to the version of the AGC/WSDOT Equipment Rental Agreement which is in effect at the time the force account is authorized. The rates listed in the Rental Rate Blue Book (as modified by the current AGC/WSDOT

© RH2 Engineering, Inc., 2023

Equipment Rental Agreement) shall be full compensation for all fuel, oil, lubrication, ordinary repairs, maintenance, and all other costs incidental to furnishing and operating the equipment except labor for operation.

Payment for rented equipment will be made on the basis of a valid invoice, covering the time period of the Work. Before Work is started, the Engineer may require the Contractor to obtain multiple quotations for the rental of equipment to be utilized and select the vendor with prices and terms most advantageous to the City. In the event that prior quotations are not obtained and the vendor is not a firm independent from the Contractor or Subcontractor, then after-the-fact quotations may be obtained by the Engineer from the open market in the vicinity and the lowest such quotation may be used in place of submitted invoice.

In addition to the payments for Contractor-owned and rented equipment, one or more lump-sum payments may be made for small tools. The amount to be paid shall be determined as outlined in the AGC/WSDOT Equipment Rental Agreement.

The City will add 21-percent to equipment costs to cover project overhead, general company overhead, profit, bonding, insurance, Business & Occupation tax, and any other costs incurred. This markup will be over and above those equipment costs and will not be adjusted for any equipment overhead amounts included in the Blue Book rates.

4. **For Services:** Compensation under force account for specialized services shall be made on the basis of an invoice from the providing entity. A "specialized service" shall be one that is typically billed through invoice in standard industry practice. Before Work is started, the Engineer may require the Contractor to obtain multiple quotations for the service to be utilized and select the provider with prices and terms most advantageous to the City. In the event that prior quotations are not obtained and the service invoice is submitted by a Subcontractor, then after-the-fact quotations may be obtained by the Engineer from the open market in the vicinity and the lowest such quotation may be used in place of the submitted invoice.

   Except as noted below, the City will pay the Contractor an additional 21-percent of the sum of the costs included on invoices for specialized services to cover project overhead, general company overhead, profit, bonding, insurance, Business & Occupation tax, and any other costs incurred.

   When a supplier of services is compensated through invoice, but acts in the manner of a Subcontractor, as described in subsection 6 of this provision, markup for that invoice shall be according to subsection 6, "Contractor Markup on Subcontractors' Work".

5. **For Mobilization:** Force account mobilization is defined as the preparatory Work performed by the Contractor including procurement, loading and transportation of

© RH2 Engineering, Inc., 2023

tools and equipment, and personal travel time (when such travel time is a contractual obligation of the Contractor or a customary payment for the Contractor to all employees). Mobilization also includes the costs incurred during demobilization. Pro-rata adjustments may be made when the mobilization applies to both force account and other Contract Work. The City will pay for mobilization for off-site preparatory Work for force account items provided that notice has been provided sufficiently in advance to allow the Engineer to witness the activity, if desired.

Any costs experienced during mobilization activities for labor, equipment, materials or services shall be listed in those sections of the force account summary and paid accordingly.

6. **For Contractor Markup on Subcontractor's Work:** When Work is performed on a force account basis by one or more approved Subcontractors, by lower-tier subcontractors or suppliers, or through invoice by firm(s) acting in the manner of a Subcontractor, the Contractor will be allowed an additional markup, from the table below, applied to the costs computed for Work done by each Subcontractor through subsections 1, 2, 3, and 4, to compensate for all administrative costs, including project overhead, general company overhead, profit, bonding, insurance, Business & Occupation tax, and any other costs incurred.

   A firm may be considered to be acting as a Subcontractor when the Engineer observes one or more of the following characteristics:

   a. The person in charge of the firm's activities takes an active role in managing the overall project, including extensive coordination, interpretation of Plans, interaction with the City or management of a complex and interrelated operation.

   b. Rented equipment is provided fueled, operated and maintained by the firm. Operators of rented equipment are supervised directly by the firm's representative. There is little interaction between the Contractor and the employees of the firm.

   c. The firm appears to be holding the risk of performance and quality of the Work.

   d. The firm appears to be responsible for liability arising from the Work.

      Markups on Work Performed by Subcontractor(s):

(1)	On amounts paid for Work performed by each Subcontractor on each force account and calculated through subsections 1-4,	up to $25,000	12 percent
(2)	On amounts greater than	$25,000 up to $100,000	10 percent

© RH2 Engineering, Inc., 2023

(3)	On amounts greater than	$100,000	7 percent

The amounts and markup rates shall be calculated separately for each Subcontractor on each force account item established.

The payments provided above shall be full payment for all Work done on a force account basis. The calculated payment shall cover all expenses of every nature, kind, and description, including those listed above and any others incurred on the Work being paid through force account. Nothing in this provision shall preclude the Contractor from seeking an extension of time or time-related damages to unchanged Work arising as a result of the force account Work. The amount and costs of any Work to be paid by force account shall be computed by the Engineer, and the result shall be final.

An item that has been Bid at a unit price or lump sum in the Proposal will not be paid as force account unless a change has occurred and the provisions require a payment adjustment. Items which are included in the Proposal as Force Account or which are added by change order as Force Account may, by agreement of the parties at any time, be converted to agreed unit prices or lump sums applicable to the remaining Work.

H. Changes and Disputes

43. Changes in the Work

The Engineer reserves the right to make, at any time during the Work, such changes in quantities and such alterations in the Work as are necessary to satisfactorily complete the project. Such changes in quantities and alterations shall not invalidate the Contract nor release the Surety, and the Contractor agrees to perform the Work as altered. Among others, these changes and alterations may include:

1. Deleting any part of the Work,
2. Increasing or decreasing quantities,
3. Altering Specifications, designs, or both,
4. Altering the way the Work is to be done,
5. Adding new Work,
6. Altering facilities, equipment, materials, services, or sites, provided by the City.
7. Ordering the Contractor to speed up or delay the Work.

The Engineer will issue a written change order for any change unless the remainder of this section provides otherwise.

If the alterations or changes in quantities significantly change the character of the Work under the Contract, whether or not changed by any such different quantities or alterations, an adjustment, excluding loss of anticipated profits, will be made to the Contract. The basis for the adjustment shall be agreed upon prior to the performance of the Work. If a basis cannot

© RH2 Engineering, Inc., 2023

be agreed upon, then an adjustment will be made either for or against the Contractor in such amount as the Engineer may determine to be fair and equitable. If the alterations or changes in quantities do not significantly change the character of the Work to be performed under the Contract, the altered Work will be paid for as provided elsewhere in the Contract. The term *significant change* shall be construed to apply only to the following circumstances:

A. When the character of the Work as altered differs materially in kind or nature from that involved or included in the original proposed construction or

B. When an item of Work, as defined elsewhere in the Contract, is increased in excess of 125-percent or decreased below 75-percent of the original Contract quantity (see Section 44).

For any changes except deleted Work or increasing or decreasing quantities, the Engineer will determine if the change should be paid for at unit Contract price(s). If the Engineer determines that the change increased or decreased the Contractor's costs or time to do any of the Work including unchanged Work, the Engineer will make an equitable adjustment to the Contract. The equitable adjustment will be by agreement with the Contractor. However, if the parties are unable to agree, the Engineer will determine the amount of the equitable adjustment. The Engineer's decision concerning equitable adjustment and extension of time shall be final.

The Contractor shall proceed with the Work upon receiving:

1. A written change order approved by the Engineer, or
2. An oral order from the Engineer before actually receiving the written change order.

Changes normally noted on field stakes or variations from estimated quantities will not require a written change order. These changes shall be made at the unit prices that apply. The Contractor shall respond immediately to changes shown on field stakes without waiting for further notice.

The Contractor shall obtain written consent of the Surety or Sureties before proceeding with Work under a change order if the Engineer requests such consent.

44. Minor Changes

Payments or credits for changes amounting to $15,000 or less may be made under the Bid Item "Minor Change". At the discretion of the City, this procedure for Minor Changes may be used in lieu of the more formal procedure as outlined in Section 42.

The Contractor will be provided a copy of the completed order for Minor Change. The agreement for the Minor Change will be documented by signature of the Contractor, or notation of verbal agreement. If the Contractor is in disagreement with anything required by the order for Minor Change, the Contractor may protest the order as provided in Section 46.

© RH2 Engineering, Inc., 2023

Payments or credits will be determined in accordance with Section 44.

45. Variation in Estimated Quantities

The quantities shown in the Proposal Form and the Contract Forms are estimates and are stated only for Bid comparison purposes. The City does not warrant expressly or by implication, that the actual quantities of Work will correspond with those estimates. Payment will be made on the basis of the actual quantities of each item of Work completed in accordance with the Contract requirements.

Payment to the Contractor will be made only for the actual quantities of Work performed and accepted in conformance with the Contract. When the accepted quantity of Work performed under a unit item varies from the original Proposal quantity, payment will be at the unit Contract price for all Work unless the total accepted quantity of any Contract item, adjusted to exclude added or deleted amounts included in change orders accepted by both parties, increases or decreases by more than 25-percent from the original Proposal quantity. In that case, payment for Contract Work may be adjusted as described herein.

The adjusted final quantity shall be determined by starting with the final accepted quantity measured after all Work under an item has been completed. From this amount, subtract any quantities included in additive change orders accepted by both parties. Then, to the resulting amount, add any quantities included in deductive change orders accepted by both parties. The final result of this calculation shall become the adjusted final quantity and the basis for comparison to the original Proposal quantity.

1. Increased Quantities.

   Either party to the Contract will be entitled to renegotiate the price for that portion of the adjusted final quantity in excess of 1.25 times the original Proposal quantity. The price for excessive increased quantities will be determined by agreement of the parties, or, where the parties cannot agree, the price will be determined by the Engineer based upon the actual costs to perform the Work, including reasonable markup for overhead and profit.

2. Decreased Quantities.

   Either party to the Contract will be entitled to an equitable adjustment if the adjusted final quantity of Work performed is less than 75-percent of the original Bid quantity. The equitable adjustment shall be based upon and limited to three factors:

   a. Any increase or decrease in unit costs of labor, materials or equipment, utilized for Work actually performed, resulting solely from the reduction in quantity;

   b. Changes in production rates or methods of performing Work actually done to the extent that the nature of the Work actually performed differs from the nature of the Work included in the original plan; and

© RH2 Engineering, Inc., 2023

c. An adjustment for the anticipated contribution to unavoidable fixed cost and overhead from the units representing the difference between the adjusted final quantity and 75-percent of the original Plan quantity.

The following limitations shall apply to renegotiated prices for increases and/or equitable adjustments for decreases:

1. The equipment rates shall be actual cost but shall not exceed the rates set forth in the AGC/WSDOT Equipment Rental Agreement that is in effect at the time the Work is performed.
2. No payment will be made for extended or unabsorbed home office overhead and field overhead expenses to the extent that there is an unbalanced allocation of such expenses among the Contract Bid items.
3. No payment for consequential damages or loss of anticipated profits will be allowed because of any variance in quantities from those originally shown in the Proposal form, Contract Provisions, and Contract Plans.
4. The total payment (including the adjustment amount and unit prices for Work performed) for any item that experiences an equitable adjustment for decreased quantity shall not exceed 75 percent of the amount originally Bid for the item.

If the adjusted final quantity of any item does not vary from the quantity shown in the Proposal by more than 25-percent, then the Contractor and the City agree that all Work under that item will be performed at the original Contract unit price.

When ordered by the Engineer, the Contractor shall proceed with the Work pending determination of the cost or time adjustment for the variation in quantities.

The Contractor and the City agree that there will be no cost adjustment for decreases if the City has entered the amount for the item in the Proposal form only to provide a common Proposal for Bidders.

46. Equitable Adjustments

The equitable adjustment provided for elsewhere in the Contract shall be determined in one or more of the following ways:

1. If the parties are able to agree, the price will be determined by using:
    a. Unit prices, or
    b. Other agreed upon prices;
2. If the parties cannot agree, the price will be determined by the Engineer using:
    a. Unit prices, or
    b. Other means to establish costs.

© RH2 Engineering, Inc., 2023

The following limitations shall apply in determining the amount of the equitable adjustment:

1. The equipment rates shall be actual cost but shall not exceed the rates set forth in the AGC/WSDOT Equipment Rental Agreement, and
2. To the extent any delay or failure of performance was concurrently caused by the City and the Contractor, the Contractor shall be entitled to a time extension for the portion of the delay or failure of performance concurrently caused, provided it make such a request pursuant to Section 48; however, the Contractor shall not be entitled to any adjustment in Contract price.
3. No claim for anticipated profits on deleted, terminated, or uncompleted Work will be allowed.
4. No claim for consequential damages of any kind will be allowed.

When the Contract specifies Work that has no Bid item, and the Work is not specified as being included with or incidental to other Bid items, an equitable adjustment will be made unless that Work is customarily considered as incidental to other items.

47. Protests

The Contractor accepts all requirements of a change order by: (1) endorsing it, (2) writing a separate acceptance, or (3) not protesting in the way this section provides. A change order that is not protested as provided in this section shall be full payment and final settlement of all claims for Contract time and for all costs of any kind, including costs of delays, related to any Work either covered or affected by the change. By not protesting as this section provides, the Contractor also waives any additional entitlement and accepts from the Engineer any written or oral order (including directions, instructions, interpretations, and determinations).

If in disagreement with anything required in a change order, another written order, or an oral order from the Engineer, including any direction, instruction, interpretation, or determination by the Engineer, the Contractor shall:

1. Immediately give a signed written notice of protest to the Engineer or the Engineer's field Inspectors before doing the Work;
2. Supplement the written protest within **14**-calendar days with a written statement and supporting documents providing the following:
    a. The date and nature of the protested order, direction, instruction, interpretation or determination;
    b. A full discussion of the circumstances which caused the protest, including names of persons involved, time, duration and nature of the Work involved,

© RH2 Engineering, Inc., 2023

and a review of the Plans and Contract Provisions referenced to support the protest;

c. The estimated dollar cost, if any, of the protested Work and a detailed breakdown showing how that estimate was determined; and

d. An analysis of the progress schedule showing the schedule change or disruption if the Contractor is asserting a schedule change or disruption; and

e. If the protest is continuing, the information required above shall be supplemented upon request by the Engineer until the protest is resolved.

Throughout any protested Work, the Contractor shall keep complete records of extra costs and time incurred. The Contractor shall permit the Engineer access to these and any other records related to the protested Work as determined by the Engineer.

The Engineer will evaluate all protests provided the procedures in this section are followed. If the Engineer determines that a protest is valid, the Engineer will adjust payment for Work or time by an equitable adjustment. No adjustment will be made for an invalid protest.

If the Engineer determines that the protest is invalid, that determination and the reasons for it will be provided in writing to the Contractor. The determination will be provided within 14-calendar days after receipt of the Contractor's supplemental written statement (including any additional information requested by the Engineer to support a continuing protest) described in item 2 above.

If the Contractor does not accept the Engineer's determination then the Contractor shall pursue the dispute and claims procedures set forth in Section 47. In spite of any protest or dispute, the Contractor shall proceed promptly with the Work as the Engineer orders.

By failing to follow the procedures of this Section 46 and Section 47, the Contractor completely waives any claims for protested Work.

48. Disputes

A. If the Contractor claims that additional payment is due and the Contractor has pursued and exhausted all the means provided in Sections 46 and 47 to resolve a dispute, including the use of a Disputes Review Board if one was established, the Contractor may file a claim as provided in this section. The Contractor agrees to waive any claim for additional payment if the written notifications provided in Section 46 are not given, or if the Engineer is not afforded reasonable access by the Contractor to complete records of actual cost and additional time incurred as required by Section 46, or if a claim is not filed as provided in this section. The fact that the Contractor has provided a proper notification, provided a properly filed claim, or provided the Engineer access to records of actual cost, shall not in any way be construed as proving or substantiating the validity of the claim. If the claim, after consideration by the Engineer, is found to have merit, the Engineer will make an equitable

© RH2 Engineering, Inc., 2023

adjustment either in the amount of costs to be paid or in the time required for the Work, or both. If the Engineer finds the claim to be without merit, no adjustment will be made.

All claims filed by the Contractor shall be in writing and in sufficient detail to enable the Engineer to ascertain the basis and amount of the claim. All claims shall be submitted to the Engineer. As a minimum, the following information must accompany each claim submitted:

1. A detailed factual statement of the claim for additional compensation and time, if any, providing all necessary dates, locations, and items of Work affected by the claim.
2. The date on which facts arose which gave rise to the claim.
3. The name of each City individual, official, or employee involved in or knowledgeable about the claim.
4. The specific provisions of the Contract which support the claim and a statement of the reasons why such provisions support the claim.
5. If the claim relates to a decision of the Engineer which the Contract leaves to the Engineer's discretion or as to which the Contract provides that the Engineer's decision is final, the Contractor shall set out in detail all facts supporting its position relating to the decision of the Engineer.
6. The identification of any documents and the substance of any oral communications that support the claim.
7. Copies of any identified documents, other than City documents and documents previously furnished to the City by the Contractor, that support the claim (manuals which are standard to the industry, used by the Contractor, may be included by reference).
8. If an extension of time is sought:
    a. The specific days and dates for which it is sought,
    b. The specific reasons the Contractor believes a time extension should be granted,
    c. The specific provisions of Section 48 under which it is sought, and
    d. The Contractor's analysis of its progress schedule to demonstrate the reason for a time extension.
9. If additional compensation is sought, the exact amount sought and a breakdown of that amount into the following categories:
    a. Labor;
    b. Materials;

© RH2 Engineering, Inc., 2023

c. Direct equipment. The actual cost for each piece of equipment for which a claim is made or in the absence of actual cost, the rates established by the AGC/WSDOT Equipment Rental Agreement which was in effect when the Work was performed. In no case shall the amounts claimed for each piece of equipment exceed the rates established by the AGC/WSDOT Equipment Rental Agreement even if the actual cost for such equipment is higher. The City may audit the Contractor's cost records to determine actual equipment cost. The following information shall be provided for each piece of equipment:

   (1) Detailed description;

   (2) The hours of use or standby; and

   (3) The specific day and dates of use or standby;

d. Job overhead;

e. Overhead (general and administrative);

f. Subcontractor's claims (in the same level of detail as specified herein is required for any Subcontractor's claims); and

g. Other categories as specified by the Contractor or the City.

10. A notarized statement shall be submitted to the Engineer certifying that the claim for extra compensation and time, if any, made herein for Work on the Contract is a true statement of the actual costs incurred and time sought, and is fully documented and supported under the Contract between the parties.

It will be the responsibility of the Contractor to keep full and complete records of the costs and additional time incurred for any alleged claim. The Contractor shall permit the Engineer to have access to those records and any other records as may be required by the Engineer to determine the facts or contentions involved in the claim. The Contractor shall retain those records for a period of not less than three years after final acceptance.

All claims must be submitted to the Engineer no later than submission of the final pay estimate. Full compliance by the Contractor with the provisions of this section is a contractual condition precedent to the Contractor's right to seek judicial relief.

49. Delays and Extension of Time

The Contractor shall submit any requests for time extensions to the Engineer in writing no later than 10-working days after the delay occurs. The requests for time extension shall be limited to the effect on the critical path of the Contractor's approved schedule attributable to the change or event giving rise to the request.

To be considered by the Engineer, the request shall be in sufficient detail (as determined by the Engineer) to enable the Engineer to ascertain the basis and amount of the time

© RH2 Engineering, Inc., 2023

requested. The request shall include an updated schedule that supports the request and demonstrates that the change or event: (1) had a specific impact on the critical path, and except in cases of concurrent delay, was the sole cause of such impact, and (2) could not have been avoided by resequencing of the Work or by using other reasonable alternatives. If a request, combined with previous extension requests, equals 20-percent or more of the original Contract time, the Contractor's letter of request must bear consent of Surety. In evaluating any request, the Engineer will consider how well the Contractor used the time from Contract execution up to the point of the delay and the effect the delay has on any completion times included in the Contract. The Engineer will evaluate and respond within 15-calendar days of receiving the request.

The authorized time for Physical Completion will be extended for a period equal to the time the Engineer determines the Work was delayed because of:

1. Adverse weather causing the time requested to be unworkable, provided that the Engineer had not already declared the time to be unworkable and the Contractor has filed a written protest.
2. Any action, neglect, or default of the City, its officers, or employees, or of any other contractor employed by the City.
3. Fire or other casualty for which the Contractor is not responsible.
4. Strikes.
5. Any other conditions for which these Specifications permit time extensions such as:
    a. If a change increases the time to do any of the Work including unchanged Work.
    b. If increased time is part of a protest that is found to be a valid protest.
    c. If a changed condition caused a delay in completing the Contract.
    d. If the City does not approve properly prepared and acceptable drawings within 30-calendar days.
    e. If the performance of the Work is delayed as a result of damage by others.
    f. If the removal or the relocation of any utility by forces other than the Contractor caused a delay.
    g. If the performance of the Work is suspended, delayed, or interrupted for an unreasonable period of time that proves to be the responsibility of the City.
    h. If a dispute or claim also involves a delay in completing the Contract and the dispute or claim proves to be valid.
    i. For Work performed on a force account basis.

© RH2 Engineering, Inc., 2023

6. If the actual quantity of Work performed for a Bid item was more than the original Plan quantity and increased the duration of a critical activity. Extensions of time will be limited to only that quantity exceeding the original Plan quantity.
7. Exceptional causes not specifically identified in items 1 through 6, provided the request letter proves the Contractor had no control over the cause of the delay and could have done nothing to avoid or shorten it.

The Engineer will not allow a time extension for any cause listed above if it resulted from the Contractor's default, collusion, action or inaction, or failure to comply with the Contract.

The City considers the time specified in the Special Provisions as sufficient to do all the Work. For this reason, the City will not grant a time extension for:

1. Failure to obtain all materials and workers unless the failure was the result of exceptional causes as provided above in subsection 7;
2. Changes, protests, increased quantities, or changed conditions that do not delay the completion of the Contract or prove to be an invalid or inappropriate time extension request;
3. Delays caused by nonapproval of drawings or plans;
4. Rejection of faulty or inappropriate equipment;

The Engineer will determine whether the time extension should be granted, the reasons for the extension, and the duration of the extension, if any. Such determination will be final.

50. Unauthorized or Defective Work

The City will not pay for unauthorized or defective Work. Unauthorized or defective Work includes: Work and materials that do not conform to Contract requirements; Work done beyond the lines and grades set by the Plans or the Engineer; and extra Work and materials furnished without the Engineer's written approval. At the Engineer's order, the Contractor shall immediately remedy, remove, replace, or dispose of unauthorized or defective Work or materials and bear all costs of doing so.

The Contractor shall promptly remove from the construction site all materials condemned by the Engineer as failing to conform to the contract, whether incorporated in the work or not. The Contractor shall promptly replace and re-execute his own work in accordance with the intent of the Contract and without expense to the City and shall bear the expense of making good all work of other Contractors destroyed or damaged by such removal or replacement.

If the Contractor does not remove such condemned work and material within 10 days of notice to the Contractor to remove, the City may remove and store any such materials at the expense of the Contractor. The City may deduct the costs of such removal from any funds otherwise due the Contractor.

© RH2 Engineering, Inc., 2023

51. Defects Arising in One Year and Remedies

The Contractor shall be responsible for correcting all defects in workmanship and material arising within one year after acceptance of this work. When corrections of defects are made, the Contractor shall be responsible for correcting all defects in workmanship and/or materials in the corrected work arising within one year after acceptance of the corrections by the City.

52. Suspension of Work

The Engineer may order suspension of all or any part of the Work if:

1. Unsuitable weather prevents satisfactory and timely performance of the Work; or
2. The Contractor does not comply with the Contract; or
3. It is in the public interest.

When ordered by the Engineer to suspend or resume Work, the Contractor shall do so immediately.

If the Work is suspended for reason (1) above, the period of Work stoppage will be counted as unworkable days. But if the Engineer believes the Contractor should have completed the suspended Work before the suspension, all or part of the suspension period may be counted as working days. The Engineer will set the number of unworkable days (or parts of days) by deciding how long the suspension delayed the entire project.

If the Work is suspended for reason (2) above, the period of Work stoppage will be counted as working days. The lost Work time, however, shall not relieve the Contractor from any Contract responsibility.

If the performance of all or any part of the Work is suspended, delayed, or interrupted for an unreasonable period of time by an act of the City in the administration of the Contract, or by failure to act within the time specified in the Contract (or if no time is specified, within a reasonable time), the Engineer will make an adjustment for any increase in the cost or time for the performance of the Contract (excluding profit) necessarily caused by the suspension, delay, or interruption. However, no adjustment will be made for any suspension, delay, or interruption if (1) the performance would have been suspended, delayed, or interrupted by any other cause, including the fault or negligence of the Contractor, or (2) an equitable adjustment is provided for or excluded under any other provision of the Contract.

If the Contractor believes that the performance of the Work is suspended, delayed, or interrupted for an unreasonable period of time and such suspension, delay, or interruption is the responsibility of the City, the Contractor shall immediately submit a written notice of protest to the Engineer as provided in Section 46. No adjustment shall be allowed for any costs incurred more than 10-calendar days before the date the Engineer receives the Contractor's written notice of protest. If the Contractor contends damages have been suffered as a result of such suspension, delay, or interruption, the protest shall not be allowed unless

© RH2 Engineering, Inc., 2023

the protest (stating the amount of damages) is asserted in writing as soon as practicable. The Contractor shall keep full and complete records of the costs and additional time of such suspension, delay, or interruption and shall permit the Engineer to have access to those records and any other records as may be deemed necessary by the Engineer to assist in evaluating the protest.

The Engineer will determine if an equitable adjustment in cost or time is due as provided in this section. The equitable adjustment for increase in costs, if due, shall be subject to the limitations provided in Section 44, provided that no profit of any kind will be allowed on any increase in cost necessarily caused by the suspension, delay, or interruption.

53. Termination of Contract

The City may terminate the Contract upon the occurrence of any one or more or the following events:

1. If the Contractor fails to supply sufficient skilled workers or suitable materials or equipment;
2. If the Contractor refuses or fails to prosecute the Work with such diligence as will ensure its Physical Completion within the original Physical Completion time and any extensions of time which may have been granted to the Contractor by change order or otherwise;
3. If the Contractor is adjudged bankrupt or insolvent, or makes a general assignment for the benefit of creditors, or if the Contractor or a third party files a petition to take advantage of any debtor's act or to reorganize under the bankruptcy or similar laws concerning the Contractor, or if a trustee or receiver is appointed for the Contractor or for any of the Contractor's property on account of the Contractor's insolvency, and the Contractor or its successor in interest does not provide adequate assurance of future performance in accordance with the Contract within 15-calendar days of receipt of a request for assurance from the City;
4. If the Contractor disregards laws, ordinances, rules, codes, regulations, orders or similar requirements of any public entity having jurisdiction;
5. If the Contractor disregards the authority of the City;
6. If the Contractor performs Work which deviates from the Contract, and neglects or refuses to correct rejected Work; or
7. If the Contractor otherwise violates in any material way any provisions or requirements of the Contract.

Once the City determines that sufficient cause exists to terminate the Contract, written notice shall be given to the Contractor and its Surety indicating that the Contractor is in breach of the Contract and that the Contractor is to remedy the breach within 15-calendar days after the notice is sent. In case of an emergency such as potential damage to life or

© RH2 Engineering, Inc., 2023

property, the response time to remedy the breach after the notice may be shortened. If the remedy does not take place to the satisfaction of the City, the Engineer may, by serving written notice to the Contractor and Surety either:

1. Transfer the performance of the Work from the Contractor to the Surety; or
2. Terminate the Contract and at the City's option prosecute it to completion by contract or otherwise. Any extra costs or damages to the City shall be deducted from any money due or coming due to the Contractor under the Contract.

If the Engineer elects to pursue one remedy, it will not bar the Engineer from pursuing other remedies on the same or subsequent breaches.

Upon receipt of a notice that the Work is being transferred to the Surety, the Surety shall enter upon the premises and take possession of all materials, tools, and appliances for the purpose of completing the Work included under the Contract and employ by contract or otherwise any person or persons satisfactory to the Engineer to finish the Work and provide the materials without termination of the Contract. Such employment shall not relieve the Surety of its obligations under the Contract and the bond. If there is a transfer to the Surety, payments on estimates covering Work subsequent to the transfer shall be made to the extent permitted under law to the Surety or its agent without any right of the Contractor to make any claim.

If the Engineer terminates the Contract or provides such sufficiency of labor or materials as required to complete the Work, the Contractor shall not be entitled to receive any further payments on the Contract until all the Work contemplated by the Contract has been fully performed. The Contractor shall bear any extra expenses incurred by the City in completing the Work, including all increased costs for completing the Work, and all damages sustained, or which may be sustained, by the City by reason of such refusal, neglect, failure, or discontinuance of Work by the Contractor. If liquidated damages are provided in the Contract, the Contractor shall be liable for such liquidated damages until such reasonable time as may be required for Physical Completion of the Work. After all the Work contemplated by the Contract has been completed, the Engineer will calculate the total expenses and damages for the completed Work. If the total expenses and damages are less than any unpaid balance due the Contractor, the excess will be paid by the City to the Contractor. If the total expenses and damages exceed the unpaid balance, the Contractor and the Surety shall be jointly and severally liable to the City and shall pay the difference to the City on demand.

In exercising the City's right to prosecute the Physical Completion of the Work, the City shall have the right to exercise its sole discretion as to the manner, method, and reasonableness of the costs of completing the Work. In the event that the City takes Bids for remedial Work or Physical Completion of the project, the Contractor shall not be eligible for the Award of such Contracts.

© RH2 Engineering, Inc., 2023

In the event the Contract is terminated, the termination shall not affect any rights of the City against the Contractor. The rights and remedies of the City under the Termination Clause are in addition to any other rights and remedies provided by law or under this Contract. Any retention or payment of monies to the Contractor by the City will not release the Contractor from liability.

In case of the termination of this Contract before completion for any cause whatever, the Contractor, if notified to do so by the City, shall promptly remove any part or all of his equipment and supplies from the property of the City; the City shall have the right to remove such equipment and supplies at the expense of the Contractor, deducting the cost thereof from any funds otherwise due to the Contractor.

54. Liquidated Damages

Time is of the essence of the Contract. Delays inconvenience the traveling public, obstruct traffic, interfere with and delay commerce, and increase risk to Highway users. Delays also cost tax payers undue sums of money, adding time needed for administration, engineering, inspection, and supervision.

Because the City finds it impractical to calculate the actual cost of delays, it has adopted the following formula to calculate liquidated damages for failure to complete the physical Work of a Contract on time.

Accordingly, the Contractor agrees:

1. To pay (according to the following formula) liquidated damages for each working day beyond the number of working days established for Physical Completion, and
2. To authorize the Engineer to deduct these liquidated damages from any money due or coming due to the Contractor.

Liquidated Damages Formula

$$LD = \frac{0.15C}{T}$$

where: LD = liquidated damages per working day (rounded to the nearest dollar)

C = original Contract amount

T = original time for Physical Completion

When the Contract Work has progressed to the extent that the City has full use and benefit of the facilities, both from the operational and safety standpoint, all the initial plantings are completed and only minor incidental Work, replacement of temporary substitute facilities, plant establishment periods, or correction or repair remains to physically complete the total Contract, the Engineer may determine the Contract Work is substantially complete. The Engineer will notify the Contractor in writing of the Substantial Completion Date. For overruns in Contract time occurring after the date so established, the formula for

© RH2 Engineering, Inc., 2023

liquidated damages shown above will not apply. For overruns in Contract time occurring after the Substantial Completion Date, liquidated damages shall be assessed on the basis of direct engineering and related costs assignable to the project until the actual Physical Completion Date of all the Contract Work. The Contractor shall complete the remaining Work as promptly as possible. Upon request by the Engineer, the Contractor shall furnish a written schedule for completing the physical Work on the Contract.

Liquidated damages will not be assessed for any days for which an extension of time is granted. No deduction or payment of liquidated damages will, in any degree, release the Contractor from further obligations and liabilities to complete the entire Contract.

55. Unilateral Acceptance

If the Contractor fails, refuses, or is unable to sign and return any documentation required for completion and final acceptance of the Contract, the City reserves the right to establish a Completion Date (for the purpose of meeting the requirements of RCW 60.28) and unilaterally accept the Contract. Unilateral final acceptance will occur only after the Contractor has been provided the opportunity, by written request from the Engineer, to voluntarily submit such documents. If voluntary compliance is not achieved, formal notification of the impending establishment of a Completion Date and unilateral final acceptance will be provided by certified letter to the Contractor. The reservation by the City to unilaterally accept the Contract will apply to Contracts that are Physically Completed, or for Contracts that are terminated. Unilateral final acceptance of the Contract by the City does not in any way relieve the Contractor of its responsibility to comply with all Federal, State, tribal, or local laws, ordinances, and regulations that affect the Work under the Contract.

56. Jurisdiction, Venue, and Time Limitation for Claims

This Agreement has been and shall be construed as having been made and delivered with the State of Washington, and it is agreed by each party hereto that this Agreement shall be governed by laws of the State of Washington, both as to interpretation and performance.

Any action of law, suit in equity, or judicial proceeding for the enforcement of this Agreement or any provisions thereof, shall be instituted and maintained only in any of the courts of competent jurisdiction in Pierce County, Washington.

Any claims or causes of action which the Contractor has against the City arising from the Contract shall be brought within 180-calendar days from the date of final acceptance of the Contract. The parties understand and agree that the Contractor’s failure to bring suit within the time period provided, shall be a complete bar to any such claims or causes of action.

© RH2 Engineering, Inc., 2023

SPECIAL PROVISIONS

1.10 GENERAL

Sections in these specifications titled "*Common Work for . . .*" shall apply to all following subsections whether directly referenced or not.

Sections in these specifications titled "*Related Sections*" shall be read as integral to the specification as if they were fully detailed within. All work and materials described in such sections shall be provided and performed by the Contractor.

1.11.02 Reuse of Documents

[CSI 01 11 30]

Contractor and any Subcontractor or Supplier shall not:

1. Have or acquire any title to or ownership rights in any of the Drawings, Specifications, or other documents (or copies of any thereof) prepared by or bearing the seal of Engineer or its consultants, including electronic media editions; or
2. Reuse any such Drawings, Specifications, other documents, or copies thereof on extensions of the Project or any other project without written consent of Owner and Engineer and specific written verification or adaptation by Engineer.
3. The prohibitions of this Paragraph will survive final payment, or termination of the Contract. Nothing herein shall preclude Contractor from retaining copies of the Contract Documents for record purposes.

1.11.03 Electronic Data

[CSI 01 31 26]

1. Unless otherwise stated in the Supplementary Conditions, the data furnished by Owner to Contractor, or by Contractor to Owner, that may be relied upon are limited to the printed copies (also known as hard copies). Files in electronic media format of text, data, graphics, or other types are furnished only for the convenience of the receiving party. Any conclusion or information obtained or derived from such electronic files will be at the user's sole risk. If there is a discrepancy between the electronic files and the hard copies, the hard copies govern.
2. Because data stored in electronic media format can deteriorate or be modified inadvertently or otherwise without authorization of the data's creator, the party receiving electronic files agrees that it will perform acceptance tests or procedures within 30 days, after which the receiving party shall be deemed to have accepted the data thus transferred. Any errors detected within the 30-day acceptance period will be corrected by the transferring party.
3. When transferring documents in electronic media format, the transferring party makes no representations as to long term compatibility, usability, or readability of documents resulting from the use of software application packages, operating systems, or computer hardware differing from those used by the data's creator.

© 2023 RH2 Engineering, Inc.

4. Computer Aided Design (CAD) files will not be made available to the Contractor. This includes AutoCAD™, Civil3D™, or other similar file types. Only printed hard copies or electronic representations of hard copies (e.g. PDF) will be provided.

1.14 Work Restrictions

[CSI 01 14 00]

1.14.19 Use of Site

[CSI 01 14 19]

The Contractor shall not perform work activities, store materials or equipment, move equipment through, or disturb in any way the areas outside the "Construction Limits" shown unless approved by the Owner in writing.

The Contractor shall provide, maintain, and adjust erosion control fencing, surface covering, and sediment traps for storm-water runoff as shown on the plans prior to beginning any work activities within this area.

1.14.22 Cold Weather Work

[CSI 01 14 22]

Any costs associated with cold weather work which may include but not be limited to: tenting; heating of workspace or materials; wind protection; snow/ice removal; testing; and removal/replacement of frozen work will be borne by the Contractor with no additional cost to the Owner.

If temperature at any time drops below freezing, the Contractor must provide freeze protection for temperature sensitive work. All costs are incidental.

1.20 PRICE AND PAYMENT PROCEDURES

[CSI 01 20 00]

1.21.55 Cost Increases for Materials

[CSI 01 21 55]

There will be no allowance for additional payment should the cost of any materials go up during the original contract timeframe, or during any approved contract time extensions. The Contractor is responsible for securing prices at the time of bid.

1.25.00 Substitution Procedures

[CSI 1 25 00]

Any product or construction method that, in the opinion of the Owner, does not meet these specifications will be considered a substitution. Substitutions must be approved prior to incorporation into the project. The Owner has the right to reject any request for substitution. Incomplete requests will not be reviewed.

© 2023 RH2 Engineering, Inc.

Requests shall include an explanation of why the request is being made along with drawings, details, specifications, and samples sufficient to allow the Owner to evaluate the proposed substitute. Requests shall include any change necessary in construction methods with a detailed description and related drawings of the proposed methods. Provide an itemized comparison of each proposed substitution with the specified product or method. If the Contractor believes there are no variations from the bid documents, include a statement to that fact in the request for substitution.

In making a request for a substitution, the Contractor represents that they have investigated the proposed product or method and has determined that it provides equal or superior form and function to the product specified. The Contractor shall coordinate incorporation of accepted substitutions into the work, making changes that may be required for the work to be completed.

The Contractor waives all claims for additional costs and time related to substitutions. The Owner reserves the right to charge the Contractor for the Owner's time required for incorporating the substitution into the work which may include but not be limited to observation, requests for information, and commissioning.

No guarantee is made that product model numbers included in the specifications or on the plans are current at the time of bidding. The bidder shall provide pricing in their proposal for current versions of discontinued models. If the bidder is uncertain of the correct replacement model, or feels there is a price discrepancy, the bidder shall request a substitution following the requirements of section 1.25.13.10 Substitutions Prior to Bid Opening. Requests for price increases after award will not be accepted.

1.25.13.10 Substitutions Prior to Bid Opening

[CSI 1 25 13 10]

Before opening bids, the Owner may consider written requests from product suppliers or prime bidders for substitutions. All requests for substitution must be received by Owner a minimum of 7 working days prior to bid opening. Approval of substitutions will be only by addendum. The bidder shall include in their proposal all costs for any modifications required to adopt the substitute.

1.25.13.15 Substitutions After Contract Execution

[CSI 1 25 13 15]

After contract execution, the Owner will consider requests for a substitution of products or methods in place of those specified. Submit electronically, or two hard copies of each request for a substitution. Submit requests early enough for the Owner to review the request without affecting the schedule. The Owner will review with reasonable promptness and will provide a response within 15 working days after receipt of all information required for the review, unless the complexity of the proposed substitution requires, in the Owner's sole opinion, additional review time.

If the Owner approves a request for substitution, and the Contractor subsequently requests an alternate substitution for the same or similar work, the Owner reserves the right to charge the Contractor for the costs required to review the alternate substitution.

© 2023 RH2 Engineering, Inc.

1.30 ADMINISTRATIVE

[CSI 01 30 00]

1.31 Project Management and Coordination

[CSI 01 31 00]

1.31.01 Contractor's Responsibility

[CSI 01 31 01]

The work included in this contract is shown on the contract plans and described in these project specifications. All work incidental and necessary to the completion of the work described and shown shall be performed by the Contractor. In submitting a bid for this project, the Bidder warrants that they are an expert in this and related work, that they understand the process and functions shown, and that various work and processes not shown but necessary for the successful operation of this project will be provided by the Contractor.

The General (or Prime) Contractor is fully responsible for providing the subcontractors and suppliers with all relevant portions of the plans and specifications necessary to bid and construct the improvements.

Damage to existing utilities or property shall be repaired or replaced by the Contractor at the discretion of the Owner.

The Contractor and each of the Subcontractors are responsible for coordinating the required inspections. There are specific requirements for inspection responsibilities and the advance notice that must be given to minimize construction delays. It is the Contractor's responsibility to be familiar with these requirements, include the coordination necessary in this estimate of project costs and schedule, and to comply with the requirements during construction. Failure to follow proper inspection and notification procedures may result in on-site work stoppages and removal or demolition of unapproved structures or systems, all at the Contractor's expense. See Starting and Adjusting section for details.

Do not start work on this project or on any public or private right-of-way or easement until clearance is given by the Owner. It will be the responsibility of the Contractor to comply with the requirements of any permit for the project. Do not hinder private property access without a 24-hour notice to the private property owner, and do not hinder access for more than an 8-hour period. Do not disrupt emergency aid access to private property.

The Contractor is solely responsible for all elements of site safety. Inspections performed by the Owner are only to monitor and record that project plans and specifications are being complied with and construction is consistent with the design intent.

The Contractor is responsible for managing, coordinating, and overseeing its subcontractors, suppliers, manufacturers' representatives, or any other persons performing Work. The Contractor shall have a competent representative, familiar with the project and work being performed, on-site at all times.

© 2023 RH2 Engineering, Inc.

1.31.19 Progress Meetings

[CSI 01 31 19 23]

The Contractor shall schedule and hold regular on-site progress meetings at least every two weeks and at other times as requested by the Owner or as required by progress of the work. The Contractor, Owner, and all Subcontractors active on the site must attend each meeting.

1.32.13 Scheduling of Work

[CSI 01 32 13]

Where the plans or specifications mention notification periods in hours or days, these time periods are assumed to be working days unless specifically stated otherwise. For example, a requirement of 48-hours notification for work desired to be performed at 1:00 pm Monday requires notification be provided no later than 1:00 pm the preceding Thursday.

1.32.16 Construction Progress Schedule

[CSI 01 32 16]

Contractor is responsible for providing an up to date construction schedule with each monthly pay estimate and at other times as requested by the Owner or as required by progress of the work. If the current schedule is still in-line with the previous schedule, the Contractor shall inform the Owner with each pay estimate. Non-working day requests shall also be submitted by the Contractor with each monthly pay estimate. Owner may delay monthly progress payments if Contractor fails to submit updated schedule and non-working day requests.

1.32.29 Periodic Work Observation

[CSI 01 32 29]

The Owner may elect to have an observer on site to monitor, observe and record construction progress. The Contractor maintains complete responsibility to verify construction is meeting the design intent and is being constructed in accordance with the plans and specifications. It is not the responsibility of the Owner's observer to address neither means and methods issues nor direct safety issues. The Owner's observer does not have the authority to stop work if unsafe conditions are observed.

1.33 Submittals

[CSI 01 33 00]

© 2023 RH2 Engineering, Inc.

1.33.23 Shop Drawings, Product Data, and Samples

[CSI 01 33 23]

Submittals are required for all items installed on this contract. Address submittals to:

RH2 Engineering, Inc.
1201 Pacific Avenue, Suite 1750
Tacoma, WA 98402

Attn: Clayton Posey

Email: cposey@rh2.com

Submittals may be provided in electronic format (preferred) or hard copy. Owner reserves the right to require the Contractor to provide hard-copy submittals at no additional cost to the Owner. When hard-copy submittals are provided, submit three (3) copies; one set will be returned to the Contractor after review.

Electronic submittal via email is acceptable, however the Contractor shall follow up with the Owner to verify that the submittal was received. The Owner assumes no responsibility for emails that do not make it to the recipient. In the case of electronic submittals, only one copy will be returned to the Contractor, either electronically or hard copy at the Owner's discretion.

Submittal data shall contain sufficient information on each item to determine if it complies with the contract requirements. Submittal cutsheets and datasheets shall be annotated by the Contractor to clearly indicate the equipment and materials that will be provided, including any options or additive items. No generic cutsheets or datasheets will be accepted.

Items installed in the work that have not been approved through the submittal process shall be removed and an approved product shall be furnished, all at the Contractor's expense.

Shop drawing review will be limited to general design requirements only and shall not relieve the Contractor from responsibility for errors or omissions, or responsibility for consequences due to deviations from the contract documents. No changes may be made in any submittal after it has been reviewed except with written notice and approval from the Owner.

Shop drawings shall be submitted on 8½-inch by 11-inch, 11-inch by 17-inch, or 22-inch by 34-inch sheets and shall contain the following information:

- Project Name as it appears on the Document Cover.
- Prime Contractor and Applicable Subcontractor.
- RH2 Engineering.
- City of Bonney Lake.
- Applicable Specification and Drawings Reference.
- A stamp or statement that the Contractor has checked the equipment for conformance with the contract requirements, coordination with other work on the job, and dimensional suitability.

© 2023 RH2 Engineering, Inc.

- A place for the Engineer to respond. (Engineer may elect to respond using the Engineer's standard forms.)

Submittals that do not comply with these requirements may be returned to the Contractor for re-submittal. The Contractor shall revise and resubmit as necessary. Acceptable submittals will be reviewed as promptly as possible and transmitted to the Contractor not later than 20 working days after receipt by the Engineer. Delays caused by the need for re-submittal shall not be a basis for an extension of contract time or delay damages.

Shop drawings and submittals shall contain the following information:

1. Drawings, dimensions, and weights.
2. Catalog information.
3. Model number, including descriptions for option and accessory codes.
4. Manufacturer's specifications.
5. Special handling instructions.
6. Maintenance requirements.
7. Wiring and control diagrams.
8. List of contract exceptions.

For integrated or package systems (see also 1.61.31), the components, shop drawings, instructions, and other elements may be submitted and reviewed individually. But the initial submittal must include the complete proposed system, and the final submittal must also be for the complete system clearly indicating all changes made during the submittal process.

The Contractor warrants that they have determined and verified all field measurements, field construction criteria, materials, catalog numbers, and similar data, and have checked and coordinated each submittal with the requirements of the work and of the contract documents.

The Owner will pay the costs and provide review services for a first and second review of each submittal item. Additional reviews shall be paid by Contractor by deducting up to $200 for each hour of review time from the next scheduled payment.

The Contractor is responsible for identifying the shop drawings and submittals required for this project. Specific submittal requirements may be listed in each section of these specifications. Contractor shall keep a complete and up to date copy of all submittals and review responses at the job site readily available to the Owner for inspection.

1.40 QUALITY REQUIREMENTS

[CSI 01 40 00]

1.42.19 Reference Standards

[CSI 01 42 19]

Work under this contract shall be performed in accordance with applicable sections of the current Standard Specifications for Road, Bridge and Municipal Construction, Washington,

© 2023 RH2 Engineering, Inc.

American Public Works Association, and Washington State Department of Transportation, hereafter referred to as the Standard Specifications.

Certain other referenced standards used in this specification are from the latest editions of:

- City of Bonney Lake Municipal Code
- IBC International Building Code
- UPC Uniform Plumbing Code
- IMC International Mechanical Code
- IFC International Fire Code
- NEC National Electrical Code
- AWWA American Water Works Association
- ANSI American National Standards Institute
- ASA American Standards Association
- ASTM American Society for Testing and Materials
- WSEC Washington State Energy Code

1.43.20 Warranty

[CSI 01 43 20]

The Contractor shall warrant all work and products for a period of one (1) year following the warranty start date except for those components and listed warrantees below.

The warranty start date is the date the Owner accepts the completed project by resolution.

Warranty does not cover damage due to misuse by the Owner or conditions outside of the Owner or Contractor's control or exceptional events (force majeure) including war, strikes, floods (water exceeding normal high water mark), rainfall in excess of 100 year storm event, fire, earthquakes, high winds (over 85 mph for 3 seconds peak gust), freezes below 10 degrees Fahrenheit (Western Washington), freezes below minus 10 degrees Fahrenheit (Eastern Washington), governmental restrictions, vandalism, utility power failures, or utility power surges (unless due to Contractor provided surge suppressor failure). The Contractor has control over workmanship, third party subcontractors and parts and materials used to complete the project.

Warranties in addition to this warranty are listed in the following sections:

- Division 7.05 Roof systems
- Division 7.51.3 Three ply roofing
- Division 8.11.1 Access doors
- Division 8.34.2 Access hatches
- Division 9.97.26 Concrete crystalline waterproofing

© 2023 RH2 Engineering, Inc.

- Division 11.10.1 Pumps
- Division 11.20.1 Pump motors
- Division 17.05 and 17.90.1 Telemetry systems

1.45.16 Field Quality Control Procedures

[CSI 01 45 16]

Unless otherwise noted on the plans or within these specifications, provide 48-hour notice to the Owner and appropriate reviewing agency for all inspections required. 48-hour notice is defined as two complete working day notice. Time is not counted on weekends and holidays (inspections required on a Monday or the day after a holiday shall be scheduled a minimum of 48 hours in advance not including the holiday hours or weekend hours.)

Contractor shall schedule and arrange for the following inspections and tests with the appropriate reviewing agency and testing company.

- Special Inspections as required per IBC Division 17 and as noted on the drawings
- Any additional inspections required by the Building Department, or other approval agency
- Soils and crushed rock compaction
- Asphalt materials and compaction
- Paint thickness and finished quality
- Pressure testing
- Water quality testing
- Concrete testing – see Division 3
- Metal/fabrication – see Division 5
- CMU testing – see Division 4

1.50 TEMPORARY FACILITIES AND CONTROLS

[CSI 01 50 00]

1.51 Temporary Utilities

[CSI 01 51 00]

Provide all necessary water for construction-related fire protection and utilities required by this contract, or by laws and regulations. Sanitary facilities adequate for all workers shall comply with all codes and regulations.

At the close of this contract, the Contractor shall pay all utility bills that are outstanding, remove all temporary electrical, sanitary, gas, telephone and water facilities, and any other

© 2023 RH2 Engineering, Inc.

temporary service equipment that may remain. In addition, the Contractor shall arrange for the transfer of electrical and water accounts to the Owner's name.

The Contractor shall make all arrangements for the required construction power. Power is available at some locations on the construction site. The existing pump house has a typical 120V wall receptacle. The Contractor may provide an extension cord to the City and the City will route the extension cord from the wall receptacle in the existing pump house to a location outside of the existing security fence around the existing pump house. The Contractor is responsible for reviewing what is available and providing what is required.

The Contractor shall make arrangements for and provide all necessary facilities for the necessary water supply for construction at their own expense unless otherwise provided.

An existing fire hydrant is located at the upper site near the Grainger Springs treatment facility. The Contractor may provide an approved Reduced Pressure Backflow Assembly and obtain a hydrant meter from the City to obtain water from the existing fire hydrant.

1.52.00 Construction Facilities

[CSI 01 52 00]

Construct and locate all field offices, all necessary gates and barricades, fences, handrails, guard rails, and securities required by this contract, or by laws and regulations. Provide shelters and dry facilities for the workers as required. Provide all guards, marks, shields, protective clothing, rain gear, and other equipment required by law, ordinance, labor contracts, Occupational Safety and Health Administration (OSHA) regulations, and other regulations for the maintenance of health and safety. Provide first aid kits and equipment as required by law.

1.52.13 Field Offices and Sheds

[CSI 01 52 13]

Provide a Contractor's office trailer for use in on-site construction meetings.

1.52.20 Locks and Keys

[CSI 01 52 20]

The Owner will not provide Owner keys for the facility. The Contractor may "daisy chain" the site security gate at the discretion of the owner. Contractor shall properly lock facilities such that City staff can access the site at all times.

All devices requiring locks, including but not limited to doors, gates, access hatches, convenience hatches, electrical enclosures, etc. shall be configured to match Owner standard lock and keys. The Contractor shall provide and install the mortise cylinders. The Owner shall provide the cores. The Owner uses a 7-pin CyberLock core.

Location	**Type**
Exterior door	Handle
Fence gate	Padlock

© 2023 RH2 Engineering, Inc.

Roof hatch	Padlock
Vault hatch(es)	Padlock

If the Owner provides a key to the Contractor for existing Owner locks, the Contractor will be responsible for the key until returning it to the Owner. If the Contractor loses the key, the Contractor will pay for re-coring of all Owner locks that use that key.

1.54 Construction Aids

[CSI 01 54 00]

The Contractor or product manufacturer may include work, materials, or components to aid in shipping, storage, installation, or other work for their convenience. Such items shall be removed prior to final project acceptance if they may interfere with the operation or maintenance of permanent work. Some examples include, but are not limited to:

- Lifting eyes: Remove only if a safety concern, obstruction, or directed by Owner.
- Picking holes: Plug holes of buried and exterior items, or if safety concern.
- Intermediate or shipping bracing: Remove and dispose.
- Protective shipping adhesives, coatings, or covers: Remove and clean residue.

1.60 PRODUCT REQUIREMENTS

[CSI 01 60 00]

1.61 Common Product Requirements

[CSI 01 61 00]

The Owner requires all metal products with few exceptions to be of domestic fabrication and construction. Exceptions are temporary products that will not be part of the permanent facility. Requests for consideration of substitution of non-domestic products should be made before the bid opening per Division 1.25.13.10 and must include a detailed explanation for the request. Requests for substitutions made after contract award are at the Contractor's risk.

1.61.31 Integrated (or Package) Products

[CSI 01 61 31]

Products specified as integrated or packaged must be administered with a single point of responsibility from a producer who regularly furnishes such products and is qualified to address and resolve issues during submittals, fabrication, installation, commissioning, and operation. These responsibilities will not be transferred to any other party without written approval by the Engineer. Products that fall under this category may include but are not limited to the following (when specified as packaged or integrated).

- HVAC systems
- Treatment Systems

© 2023 RH2 Engineering, Inc.

- Motor Control Centers
- Control systems

1.70 EXECUTION AND CLOSEOUT REQUIREMENTS

[CSI 01 70 00]

1.71 Examination and Preparation

[CSI 01 71 00]

1.71.23.16 Construction Surveying

[CSI 01 71 23 16]

The Contractor is responsible for surveying and staking and shall stake out the locations of the permanent easements, temporary easements, rights-of-way, and all major facilities shown on the Plans and establish bench marks at locations designated by the Owner. The Contractor shall protect all stakes and marks in their original conditions. If stakes and markings are destroyed or defaced before their use is ended, the cost of replacing them will be at the Contractor's expense. All stakes, points, and marks, shall be administered and approved by a registered professional land surveyor licensed in the State of Washington. Provide approved and stamped survey notes, and control points to the Owner for as-built purposes.

Contractor to survey the station line(s) and install pins or offset stakes every 50 feet within areas that will not be disturbed by construction. For utility work, 5-foot and 10-foot offset stakes must be provided for major components including, but not limited to: tees, valves, manholes, catch basins, changes in angle 45-degrees or more, and vaults larger than 4-foot square.

Replace all damaged survey monuments in accordance with WAC 332-120.

1.74 Cleaning and Waste Management

[CSI 01 74 00]

1.74.23 Final Cleaning

[CSI 01 74 23]

All areas impacted by the work shall be restored to at least original condition, unless specifically identified otherwise in the plans or specifications. All costs are incidental.

Clean up debris and unused material and remove from the site and any buildings. If vehicle traffic causes ruts, repair asphalt (new or existing) in paved areas. In non-traffic areas back track with dozer or excavator and repair to final surface condition including necessary hydroseed, mulch, and landscaping. Eliminate weeds within the construction area prior to project closeout.

Buildings shall be broom clean and all foreign damage or markings removed or repaired.

Equipment shall be washed clean using appropriate methods.

© 2023 RH2 Engineering, Inc.

Unpainted exposed concrete structures shall be cleaned to a consistent bare concrete surface finish. Remove extraneous substances such as efflorescence, leakage residue, and excess repair materials.

Remove existing equipment or materials identified in the contract documents or that interfere with the work. Dispose of all such existing equipment or materials unless the Owner requests items to be salvaged for their use. Owner has first right of salvage.

Should the Owner identify salvageable items of their property prior to removal, the Contractor shall protect said items from damage during the work, and will be responsible for reimbursing the Owner should the Contractor damage the items.

1.74.40 Abandonment & Removal of Terminated Water Facilities

[CSI 01 74 40]

Owner is the sole determiner of appropriate abandonment procedures and methods. Restore all disturbed surfaces to original condition or better and to the satisfaction of the Owner and land owner/agency. Dispose of equipment the Owner does not want. The following methods are approved abandonment procedures for terminated facilities.

Abandoned hydrants, services, branching mains, etc. shall be terminated at the facility location and at the mainline. The lateral pipe shall not be left connected to the mainline.

Valves:

1. Remove valves and valve boxes. Plug or blind flange the water main.
2. An alternative method of abandonment is acceptable if, at the discretion of the Owner, the valve cannot be removed. Plug and close the valve, then remove the valve box.

Watermains:

1. Cut and drain the abandoned water main where exposed during construction.
2. Remove mains in the way of new construction. Saw cut and remove short sections of pipe. Mains shall not be forcibly removed with heavy equipment due to potential damage to surrounding utilities.
3. Mains that will be terminated but not encountered during new trenching may be left in place, but all valves must be abandoned as described under "valves".
4. Plug ends of abandoned mains exposed during construction with grout plug, blind flange, or cap as directed by the Owner depending on the type of pipe and soil conditions.

1.75 Starting and Adjusting

[CSI 01 75 00]

1.75.16 Startup Procedures

[CSI 01 75 16]

© 2023 RH2 Engineering, Inc.

1.75.16.10 Startup

[CSI 01 71 16 10]

See the Automatic Control section for control system startup.

Startup shall consist of a simulated operation of all equipment and controls. The purpose of startup shall be to check that all equipment will function under operating conditions, that all interlocking controls and sequences are properly set, and that the facility will function as an operating unit. In general, the startup will consist of metering caustic soda into the treatment process. All pipes, and chemical feed lines shall be full prior to startup. Chemical feed systems will be adjusted to achieve proper dosing, and water quality will be verified by the manufacturers and then corroborated by the Inspector. Startup will continue with further checking of all instruments, operations, and sequencing. At least four successful starts and stops of the treatment systems will be required prior to acceptance of startup.

Startup shall not occur on a Saturday, Sunday, Monday, Friday, on an Owner recognized holiday, or the day before or after an Owner recognized holiday unless approved in advance by the Owner.

Technically qualified product representatives shall be present for the startup phase. All representatives shall be trained, qualified, and have experience in troubleshooting and fixing field issues. The startup shall continue until it is demonstrated that all functions, controls, and equipment are functioning correctly.

Authorized manufacturer's representatives shall be provided for the following items:

- Pumps and motors
- Pilot-operated hydraulic control valves
- Variable frequency drives
- Motor control centers (electrician may qualify if approved by manufacturer)
- Field sensors (electrician may qualify if approved by manufacturer)
- Programmable controllers
- Telemetry equipment
- Packaged treatment skid

1.75.16.12 Startup and Testing Coordination

[CSI 01 75 16 12]

The Contractor shall conduct all testing and startup. Testing and startup shall not be a cause for claims for delay by the Contractor and all expenses for testing and startup shall be incidental to this contract.

The placing of all improvements in service shall consist of three parts: "testing", "startup", and "operation". Not less than 21 calendar days before the anticipated time for beginning

© 2023 RH2 Engineering, Inc.

testing, the Contractor shall notify and submit to the Owner for approval, a complete plan for the following:

1. Schedules for tests:
   A. Telemetry Panel Factory Demonstration Test (at panel shop)
   B. Pumps and motors
   C. Control system
   D. Meter calibration
   E. Control Valves
   F. Treatment System
2. Detailed schedule of procedures for startup.
3. Complete schedule of events to be accomplished during testing.
4. An outline of work remaining under the contract that will be carried out concurrently with the operation phases.

Failure to provide proper notification to the Owner may lead to liquidated damages if schedule cannot be maintained. If rescheduling is required because components are not ready for testing, the notification requirements are reset as needed to provide 21 calendar days advance notice to reserve the Owner Representatives' time.

The Contractor shall arrange for all materials, supplies, and labor necessary to efficiently complete the testing, startup, and operation. Measuring devices must be functional, accurate, legible, and scaled appropriately for the test. The Owner has the right to reject or require verification for any measuring device the Owner suspects in its accuracy.

At a minimum, the Contractor shall provide:

- Calibrated pressure gauge(s) (max scale of 120% to 200% of test pressure)
- Air compressor
- Voltmeter
- Amp meter.
- Pump/motor vibration measuring device (inches per second and inch peak to peak)

1.75.16.20 Testing

[CSI 01 75 16 20]

The Contractor may periodically request preliminary testing for items that must be covered or tested before other work can proceed. In these cases, do not cover up or test the work without timely notice to the Owner of its readiness for testing. Should any work be covered up without notice, approval, or consent, it must, if required by the Owner, be uncovered for examination at the Contractor's expense. All necessary equipment shall be set up and the work given a preliminary test so that defects may be discovered and repaired prior to calling out the Owner to witness the test.

© 2023 RH2 Engineering, Inc.

Final testing consists of individual tests and checks made on equipment intended to provide proof of performance, operation, and control in the presence of the Owner. Assure proper alignment, size, condition, capability, strength, adjustment, lubrication, pressure, hydraulic test, leakage test, and all other tests deemed necessary by the Owner to determine that all materials and equipment are of specified quality, properly situated, anchored, and in all respects ready for use. Any certificates required in these specifications by the manufacturer's representatives shall be supplied to the Owner prior to startup.

All piping shall be tested as required by specifications and applicable codes. Tests on individual items of equipment shall be as necessary to show proper system operation. During testing, the Contractor shall correct any defective work discovered. Startup shall not begin until all tests required by these specifications have been completed and approved by the Owner.

Not less than five working days before the anticipated time for beginning the testing, the Contractor shall provide a list of representatives that will be attending the testing. The Owner may request additional representatives at no additional cost if said representatives are identified in these specifications.

Chemical Storage Tanks, Pumping Systems, and Piping

Upon successful completion of the leakage testing called for in Division 11 for the chemical tanks, the Contractor shall provide sufficient chemical(s) solution in the product tank to flood the suction of the metering pump line(s). Contractor shall provide a temporary bypass from the discharge of the valve boards back to the product tank. Contractor shall run the metering pump in manual for a minimum of 24 hours to verify that all connections are leak proof and ready to be placed into service. Upon successful completion of this testing as verified by the Engineer or Owner, Contractor shall make all final connections and prepare for startup. Contractor shall neutralize all chemical product waste prior to disposing at the site. Contractor must provide all chemicals or bulk storage containers required to complete the testing, startup, and operational demonstration.

Qualified product representatives to be on site for the following equipment, at a minimum:

- Pumps and motors
- Treatment equipment
- Pilot-operated hydraulic control valves
- Motor Control Centers

Additional representatives required may be identified elsewhere in these specifications.

1.75.16.22 Scheduling of Owner Review for Testing

[CSI 01 75 16 22]

See Division 1.75.16.10 for scheduling and notification requirements.

The Contractor shall provide notification two working days and two working hours (to confirm readiness) of the scheduled test(s) to the Owner confirming that the Contractor has successfully completed all preliminary testing and that all equipment, tools, materials, labor, subcontractors, manufacturer's representatives, and all other items required for witnessed

© 2023 RH2 Engineering, Inc.

testing are available and fully functional. Failure to provide advance notification and confirmation or meet any of the testing requirements will constitute a failed test in accordance with the section Inspection and Tests of the General Conditions.

A detailed testing schedule shall be provided by the Contractor and updated as needed to be at least 48 hours ahead of actual testing. If testing requires downtime in order to perform repairs due to failed test, the Contractor shall pay the Owner in the amount of $200 per hour per Owner Representative on site (minimum of $400 per scheduled visit) for downtime lasting longer than 2-hours required to complete repairs to verify the complete construction is ready for startup and operation. This amount will be deducted from the appropriate bid item that relates to the finished construction and documented by the Owner at their discretion. The Contractor must have all systems pre-tested prior to calling the Owner for formal testing.

Schedule shall include control system testing starting on Mondays or Tuesdays so that the remainder of the week can be used to identify the stability of the control system for the SCADA system, pump station, or treatment plant. Control system testing shall not start on a Thursday, Friday, or the day before an Owner recognized holiday.

1.75.16.32 Pump Testing

[CSI 01 75 16 32 or 33 08 00]

See the applicable pump sections of these specifications for pump testing requirements.

1.75.16.35 Treatment System Testing

[CSI 01 75 16 35 or 46 08 00]

The Contractor and equipment suppliers shall provide all equipment, regents, etc. to complete the testing, startup, operational demonstration, and training portions of this project. The Owner's equipment, reagents, etc. will not be available for use by the Contractor or equipment suppliers.

Contractor shall be responsible for calibration, startup, and initial performance to meet the specifications herein to the satisfaction of the Engineer or Owner. The Contractor shall conduct all testing, startup, operational demonstration, and training coordination with the suppliers. The Contractor shall schedule all testing, startup, operational demonstration, and training activities with the Engineer and the Owner. Supplier of specialized equipment such as metering pump(s) shall provide a trained, qualified manufacturer's representative to check installation and connection, perform field tests as indicated, and certify to Owner that its performance does meet all specifications. Testing, startup, training and operational demonstration shall not be a cause for claims for delay by the Contractor and all expenses for testing, startup, operational demonstration, and training in addition to the amount listed in the bid time for it shall be incidental to this Contract. The Contractor shall make arrangements for all materials, supplies, and labor necessary to efficiently complete the testing, startup, operational demonstration, and training.

The placing of all improvements into service shall consist of three parts: Testing, Startup, and Operational Demonstration. Not less than 15 working days before the anticipated time for beginning the startup, the Contractor shall submit to the Engineer for approval, a complete plan for the following:

© 2023 RH2 Engineering, Inc.

- Schedule of startup date(s)
- Schedule of operational demonstration date(s)
- Detail outline and schedule of procedures for startup
- Complete schedule of events to be accomplished during startup
- A list of equipment (pumps, on-site chlorination, etc.)
- An outline of work remaining under the contract that will be carried out concurrently with the demonstration phases

The startup date(s) will not be scheduled with the Engineer or Owner until the above plan is submitted for approval.

1.75.16.40 Electrical and Control Systems Testing

[CSI 01 75 16 40 or 25 08 00 or 26 08 00]

See also the applicable electrical sections for electrical system testing.

See also the applicable automation sections for automatic control system testing.

The following is a list of components that shall be tested prior to project completion. This list is intended as a general guide and is not necessarily complete:

- Pressure sensors and alarms
- Flow sensors and alarms
- Temperature sensors and alarms
- Smoke alarms
- Intrusion sensors and alarms
- Motion sensors
- Photovoltaic sensors
- HVAC controls
- Local control
- Automatic control
- Variable speed drives

1.75.16.50 Concrete Clear Well Disinfection

[CSI 01 75 16 50 or 33 08 10 or 33 01 10.59]

Prior to disinfection, hose down surfaces with potable water and sweep up debris and sediment. Do not wash debris into the drain pipe.

Follow the procedures of AWWA C652 Chlorination Method 2, as modified herein, before placing the facility in service. Disinfect all interior surfaces including walls, floor, piping,

© 2023 RH2 Engineering, Inc.

ceiling, columns, ladders, stairs, and appurtenances. Apply a chlorine solution containing not less than 200 PPM of chlorine using spray equipment or brushes. Chlorine solution may be re-circulated during disinfection unless it becomes contaminated or drops below 100 PPM. Open and close all valves several times during the chlorination. Liquid chlorine, sodium hypochlorite, or calcium hypochlorite may be used for disinfection purposes. Disinfected surfaces shall remain in contact with the strong chlorine solution for at least 30 minutes. Fill drain pipe with 10 ppm solution.

If it will be more than 24-hours (calendar) between initial disinfection and filling, wash chlorine solution off any stainless steel using potable water no less than 30 minutes nor more than 12 hours after disinfection.

Following initial disinfection, fill to overflow with potable water. Filling must occur as soon as practical after disinfection and the 30-minute waiting period. If filling is delayed for more than one week, the disinfection shall be repeated. Purge the water in the drain pipe prior to complete filling of the reservoir (dechlorinated if necessary). Water with a chlorine residual shall be stored and aerated or otherwise neutralized until it can be safely disposed of in accordance with all applicable regulations. All disposal shall be the responsibility of the Contractor. Water containing a chlorine residual shall not be disposed of into the water system, stormwater system, or any surface watercourse.

Let the water sit for 24 hours. A water sample will then be taken by the Owner from the clear well and from the existing water supply for reference. A laboratory certified by the Washington State Department of Ecology will be retained by the Owner to perform a bacteriological test of the sample. The clear well shall not be placed in service until passing test results have been received and approved by the Owner and the necessary documents have been submitted to the Washington State Health Department of Health. Test for the following parameters, minimum.

- Coliform (absence required)
- pH (6.5 to 8.5)
- Alkalinity
- Turbidity
- Conductance (700 Umhos/cm max)

Alkalinity and turbidity do not have fixed values to meet but should be near those of the water used for filling. The Owner will determine if the values are acceptable.

The Owner will provide water for the initial testing of the reservoir at no cost to the Contractor. Should the initial test not pass, or the water sits in the reservoir and becomes unusable, the costs for additional water and tests shall be the responsibility of the Contractor. Exercise special care when draining the reservoir to avoid damage to surrounding properties.

1.75.16.51 Clear Well Leakage Warranty

The Contractor shall repair any leaks, running water, wet spots, etc., appearing within the warranty period stated in division 1.43.20. Concrete clear well leakage as defined in division

© 2023 RH2 Engineering, Inc.

1.75.16.52. Any such repairs are subject to an additional 1-year warranty starting the date the Owner accepts the repair.

1.75.16.52 Concrete Clear Well Leakage Test

[CSI 01 75 16 52 or 33 08 10]

A leakage test of the completed clear well shall be performed by the Contractor following disinfection. On completion of the clear well, and prior to any specified backfill placement at the footing or wall, a leakage test shall be applied to determine water tightness.

The clear well shall be filled with potable water to the overflow elevation and let stand for 24 hours to allow the concrete to absorb moisture. Seal vents and overflow piping with plastic sheeting to reduce evaporation.

The water level shall be marked and measured inside the reservoir at the beginning of the test. The drop in water level shall then be measured after a one-week period. The leakage in the reservoir shall not exceed 5 percent of 1 percent of the total reservoir capacity per day (35 percent of 1 percent of the total reservoir capacity per week). If the reservoir water loss after the one-week period is less than or equal to the amount calculated as specified above, the test shall be considered satisfactory.

If the reservoir level drops more than the amount calculated above, the leakage shall be considered excessive and the reservoir shall be repaired as specified in Division 3, disinfected again, and retested until the leakage falls within the appropriate limit.

Damp spots on the exterior wall surface, measurable leakage of water at the wall base, or presence of water in leak detection pipes, shall be considered excessive leakage regardless of the calculated leakage rate. Damp spots are defined as spots where moisture can be picked up on a dry hand. The cracks associated with water movement through the wall shall be located and permanently repaired accordance with Division 3.64 unless an alternative method is otherwise agreed to by the Owner. Leakage through the wall-base joint or footing shall likewise be repaired.

The Contractor shall pay for all repairs and water used in any retest. The owner will pay for the water for the initial test only. All exterior surfaces of walls and top of footing shall remain exposed for the full duration of the test, and during any repairs and retesting periods. Surfaces shall not be backfilled, covered or otherwise obscured until the Owner determines that the reservoir has passed the leak test.

1.75.16.56 Clear Well Soak Test

[CSI 01 75 16 56 or 33 08 10]

A soak test shall be performed to check the level of chemical contaminants in the field, in compliance with the Washington State Department of Health 2019 Water System Design Manual Appendix G.

Following a 7-day soaking period, the water in the clear well shall be sampled by the Owner to determine the level of any leached chemicals. Samples of the water shall be analyzed by a laboratory certified by the Washington State Department of Ecology. Cost of initial test shall

© 2023 RH2 Engineering, Inc.

be borne by the Owner. The samples shall be tested for normal domestic water quality plus the following additional constituents.

- Complete Inorganic Chemical sample (IOC)
- Volatile Organic Chemical analysis (VOC)
- Polynuclear Aromatic Hydrocarbons (PAH), concrete reservoirs only.

A report of the test results shall be sent to the Washington Department of Health regional office for evaluation and approval before delivering water from the reservoir. The report shall include the word "Investigative" in the title or purpose section.

Re-testing is required when contamination exceeding the maximum contaminant level or trigger level is found. At the Owner's discretion, the Owner may elect to put the facility in operation if the trigger level is exceeded but the maximum contaminant level is not.

The soaking period shall imitate actual operating conditions. Therefore, in some cases, longer or shorter soaking periods may be specified, depending upon an evaluation of field conditions encountered.

The Contractor shall pay for the water wasted due to soak test failure. Labor, expenses and laboratory certification for soak re-test shall be borne by the Contractor.

1.75.35 Operational Demonstration

Operational demonstration shall be conducted after successful startup has been completed as determined by the Engineer and Owner.

The purpose of the operational demonstration period is to demonstrate automated operation of the equipment and system(s) and to verify functional integrity of the system(s). This demonstration period shall occur under full operational conditions as determined by the Owner. The Owner reserves the right to simulate operations variables and equipment failures to verify the functional integrity of automatic and manual backup systems and alternate operating modes. The demonstration period shall be for five (5) consecutive working days with a minimum of eight (8) hours per day of operation. The date and time that the operational period shall begin and end will be agreed upon by the Contractor, Owner, and Engineer in advance of initiating the operational demonstration period. The City shall provide a certified operator during this period to provide equipment operation and maintenance. The Contractor shall respond and repair any problems or failures that occur during this period. If, during the operational demonstration period, the aggregate amount of time used for repair, alteration, or unscheduled adjustments to any equipment or systems that renders the affected equipment or system inoperative exceeds 5 percent of the demonstration period, the operational demonstration will be deemed as failed and will be repeated. Any shut downs due to equipment or systems failures shall be corrected immediately by the Contractor. The Contractor must provide a report as to the cause of the shutdown/failure and current status of the system to the Owner's operator before returning the equipment or system back to the auto position to continue the operational demonstration period. The Owner's operator reserves the right to decide if the issue that caused the system to fail could potentially be a safety concern if the system were to be put back into auto. The Owner will provide contact information for on-call operations personnel for the week of operational demonstration prior to system testing.

© 2023 RH2 Engineering, Inc.

1.78 Closeout Submittals

[CSI 01 78 00]

1.78.23 Operation and Maintenance Data

[CSI 01 78 23]

Failure to provide acceptable final documentation including operation and maintenance (O&M) manuals and as-built drawings will result in non-payment of the appropriate bid item in the schedule of prices.

See also the Automatic Controls section for additional requirements for automatic control systems manuals. Detailed requirements for specific equipment and systems may also be included in their respective specification sections.

Remove and preserve all tags and instructions that come packaged with or attached to equipment. Deliver all such documents to the Owner bound in a three-ring binder or with the O&M Manual. Insert documents in sleeves if they cannot be punched. Scan all such documents to Adobe PDF format and provide with the O&M Manual.

Prior to the receipt of payment for more than 90 percent of the work, deliver to the Owner acceptable manufacturer's instructions covering equipment and systems O&M procedures, for coatings furnished under this contract, and any additional items indicated by the Owner.

The operating and maintenance instructions shall include, as a minimum, the following data for each coating and equipment item:

Products

A. Identification including brand name, model number, and serial numbers.

B. Date of manufacture and date of installation on job site.

C. Complete as-built elementary wiring and one-line diagrams.

D. Complete parts list, by generic title and identification number, complete with exploded views of each assembly.

Maintenance

A. Recommended spare parts.

B. Lubrication schedule including the applicable lubricant designation available from the Standard Oil Company of California.

C. Recommended preventive maintenance procedures and schedules. Schedule shall be provided for daily, weekly, monthly, quarterly, semi-annually and annually maintenance.

D. Disassembly and re-assembly instructions including parts identification and a complete parts breakdown for all equipment.

E. Weights of individual components of each item of equipment weighing over 50 pounds.

© 2023 RH2 Engineering, Inc.

F. Name, location, and telephone number of the nearest suppliers and spare parts warehouses.

G. All manufacturers' warranties. Include name, address, and telephone number of the manufacturer's representative to be contacted for warranty, parts, or service information.

H. Cleaning, repair, and maintenance instructions for each coating system.

I. Provide USB flash drive or DVDs utilized in the manufacturer's instruction program.

Operation

A. Recommended trouble-shooting and startup procedures.

B. Recommended step-by-step operating procedures.

C. Emergency operation modes, if applicable.

D. Normal shutdown procedures.

E. Long term shutdown (mothballing) procedures.

F. Equipment specifications and guaranteed performance data.

G. General manuals which describe several items not in the contract will not be accepted unless all references to irrelevant equipment are neatly eradicated or blocked out.

Provide 3 hard copies of O&M manuals (2 for Owner, 1 for RH2). A duplicate USB or DVD copy may be provided but shall not substitute for a hard copy unless approved by the Owner.

Bind each set of instructions into multiple volumes; each volume to be complete with an index and bound in a suitable, hard-covered binder. Binders shall be hardback construction with full-length metal hinge. 3-inch to 5-inch width as appropriate for the quantity of O&M documentation. More than one binder may be required for large projects. Binders equal to Wilson-Jones WLJ344 series or WLJ369 series or Specialty Loose Leaf models 87784, 98085, 98086, or 98984.

Manuals shall be assembled and indexed so that information on each coating and piece of equipment can be readily found.

The Contractor shall secure and deliver to the Owner all equipment warranties and other warranties and guarantees required for all equipment and processes. Delivery shall be done at one time covering all major and minor equipment warranties. Copies of the warranties shall be included in each O&M Manual.

See Division 1.43.20 for details regarding required warranties for specific components.

1.78.39 Project Record Documents

[CSI 01 78 39]

Prior to receiving final payment for the work, deliver a complete set of "As-Constructed" records (also called as-built, or record plans) to the Owner. The Owner has sole discretion to determine if the records provided are legibly and accurately presented and may request

© 2023 RH2 Engineering, Inc.

revisions, which shall be provided by the Contractor at no additional cost. Records shall be made as follows or as approved by the Owner:

- Yellow markings or highlights = deleted items
- Red markings = new or modified items

Records shall be made on clean unmarked ANSI D-size hard-copy prints.

Provide "as-constructed" information on all items and work shown on the plans showing details of the finished product including dimensions, locations, outlines, changes, manufacturers, etc. The information must be in sufficient detail to allow the Owner's personnel to locate, maintain, and operate the finished product and its various components.

See also electrical plan requirements in Division 16.05.

1.79 Demonstration and Training

[CSI 01 79 00]

1.79.10 Training

[CSI 01 79 10]

See the Automatic Control section for automatic control systems training.

At the time that the facility is ready to be put into operation, the Contractor is to conduct an operation and maintenance training meeting with the Owner to explain in detail the operation and maintenance requirements of each of the facility's components. The training meeting shall not occur on the same days as a startup.

Operation of the facility shall commence immediately after completion of testing, startup, and training and after satisfactory repairs and adjustments have been made.

1.80 PERFORMANCE REQUIREMENTS

[CSI 01 80 00]

1.81 Facility Performance Requirements

[CSI 01 81 00]

1.81.30 Seismic Restraint and Anchorage

[CSI 01 81 30]

Install seismic restraints when called for in the contract or recommended by the product manufacturer. Install in accordance with the manufacturer's requirements as applicable.

Seismic restraint systems shall be installed so as not to interfere with normal operations and maintenance of the equipment and other components as shown on the plans. Interference with normal operations and maintenance shall be as determined by the Owner. Drilled-in anchors for non-rotating equipment shall be Concrete Anchors unless otherwise specified.

© 2023 RH2 Engineering, Inc.

1.81.40 Pressure Ratings

[CSI 01 81 40]

Fittings, valves, pipe, and other fluid systems shall have pressure ratings equal to or greater than the pressures identified herein, unless specifically called out otherwise in the plans or specifications. Pressures listed are gauge pressure, unless specified otherwise.

The pressure class of pipelines and appurtenances shall comply with the Owner's standards for minimum pressure class or the pressure class that meets the requirements of this section, whichever is greater.

Equipment Type or Function	Normal Pressure	Working Pressure	Test Pressure
Collection piping, Pump Suction Piping	20 psi	150 psi	250 psi
Pumps, Pump Discharge Piping	210 psi	295 psi	343 psi

Normal Pressure: The maximum pressure anticipated under normal operating conditions. This value is provided for the Contractor's information, but typically is lower than the required pressure rating of the equipment.

Working Pressure: Manufacturer's rating of maximum pressure during extended operation.

Test Pressure: Maximum pressure during project specific testing.

1.81.45 Location Designations

[CSI 01 81 45]

The following location designations shall be used except where otherwise noted on the plans:

Dry Locations: Indoor continually dry areas including office, laboratory, blower, and electrical rooms.

Wet Locations: All locations exposed to the weather, whether under a roof or not, or within channels, basins or tanks.

Damp Locations: Process areas; areas containing pumps, valves, and major piping; all spaces wholly or partially underground, or having a wall or ceiling forming part of a channel or tank, unless otherwise designated on the Plans. Any areas which do not fall within the definitions for dry, wet, or corrosive shall be considered damp.

Corrosive Locations: Areas where chlorine gas under pressure, sulfuric acid, or liquid polymer are stored or processed, sewer wetwells and sewer manholes.

Immersed or **Submerged Locations:** Areas which are periodically, or continuously submerged in, or contain a liquid.

© 2023 RH2 Engineering, Inc.

1.81.50 Materials in Contact with Domestic Water

[CSI 01 81 50]

All devices, components, and materials substantially in contact with potable water shall be certified by NSF International to comply with NSF/ANSI 600 (leachable materials) and NSF/ANSI 372 (lead content). Certification of compliance shall be supplied in writing at the time of the submittal process. See exceptions in WAC 246-290-220(1).

© 2023 RH2 Engineering, Inc.

2.00 GENERAL

[CSI 32 00 00]

Sections in these specifications titled "*Common Work for . . .*" shall apply to all following subsections whether directly referenced or not.

2.05 Common Work for Exterior Improvements

[CSI 32 05 00]

This division covers the work for providing materials and performing all sitework as described in these specifications and as shown on the Plans.

Part 1 General

Submittals

Submittal information shall be provided to the Owner for the following items:

- Erosion and Sedimentation Control Plan
- Erosion Control Fence Fabric
- Erosion Control Mat
- Dewatering Plan
- Shoring Plan and Calculations
- General Fill
- Structural Fill
- Pipe Bedding
- Trench Backfill
- Gravel Backfill for Drains
- Crushed Surfacing
- Rock; Rip Rap; Quarry Spalls
- Paving
- Hydroseed
- Fencing
- Topsoil

Other items listed in this section or required by the Owner.

© 2023 RH2 Engineering, Inc.

2.07 Geotechnical Investigations

[CSI 02 32 00]

An exploration of subsurface soil and groundwater conditions at the project site were performed by RH2 Engineering, Inc. Test pit results of the investigation are included in the project drawings.

2.08 Special Inspections for Earth Work

[CSI 31 08 20]

Part 3 – Execution

Field Quality Control

Special inspections including visual, probing of subgrade, and compaction effort (nuclear densometer or probe) are required for the following locations:

- Trench backfill crossing roads and parking areas (visual, probe and nuclear densometer testing)
- Road and parking area fill and native subgrade (visual, probe, and nuclear densometer testing if found necessary by the Owner)
- Crushed surfacing under roads, parking areas, and structures (visual, probe, and nuclear densometer testing)
- Native (and fill if any) subgrade of vaults, footings, foundations, and floors (visual and probe)

Areas where fill (either native or non-native) is being placed shall be tested for compaction compliance by a special inspector. The Owner will pay for the initial testing. If tests indicate failure of compaction requirements, the Contractor shall pay for subsequent tests until tests indicate compliance with the specifications. Areas of native undisturbed subgrade shall be visually inspected by the Owner prior to placement of any material overtop. Contractor shall coordinate with the Owner a minimum of two (2) full working days prior to inspection being needed.

The Contractor shall fully cooperate with the special inspector, including providing safe access to the testing areas. No extra compensation will be provided for cooperation with and facilitation of inspections.

<u>Utility Trench Testing</u>

Testing will occur at the following locations at a minimum:

One test within 30 feet of start.

One test every 300 feet or at road intersections, whichever comes first.

One test whenever soil conditions change, per the direction of the Owner.

The Contractor shall schedule with Owner for visual and probe review of earthwork activity. Contractor shall schedule with Owner and special inspection agency for nuclear densometer

© 2023 RH2 Engineering, Inc.

testing. Deliver test results to the Owner and to the roadway jurisdiction if different than the Owner.

2.10 SITE PREPARATION

2.10.2 Clearing and Grubbing

[CSI 31 11 00]

Part 3 – Execution

Construction

Clearing and grubbing shall be performed by the Contractor to remove and dispose of unwanted debris, vegetative matter, and other items noted on the Plans within the construction limits and shall conform to Section 2-01 of the Standard Specifications.

Protect trees and tree roots, structures and foundations, utilities, fences, and all other existing improvements not being removed regardless if shown to be protected on the Plans.

Remove and relocate permanent improvements that are within the construction limits, such as mailboxes and traffic signs. Locate mailboxes to preserve mail service during construction. Return facilities to original location, or plan location, at completion of local work.

Do not remove organic material including plants, grasses, trees, and native topsoil unless directed on the Plans. Where the Contractor is allowed to clear areas to facilitate construction but is not required to, restore any areas disturbed by construction to existing or better condition including matching surface restoration with seed, sod, or plantings as shown in adjacent areas required to be modified by the Plans. Restoration shall be completed at no additional cost to the Owner.

2.10.3 Springs Protection

[CSI 01 14 19 or 32 01 30 or 33 01 10.80]

Part 1 – General

The project is located within the Owner's Sanitary Control Area for their Grainger Springs potable water supply. The Owner has water quality records for the springs that indicate that it is not currently contaminated.

The Contractor is responsible for preventing accidental release of contaminants due to construction activities. The Contractor is responsible for springs water quality during the entire construction phase and shall take appropriate means to protect the water quality. This may include but is not limited to, providing tarps under inactive equipment, immediate spill containment and cleanup, installation and maintenance of temporary erosion and sedimentation control devices, and all other work necessary to protect the water quality of the well.

© 2023 RH2 Engineering, Inc.

Submittals

At a minimum, the Contractor shall provide the following as part of a spill control and response plan. A draft of this plan is due at the pre-construction conference. The approved version of the plan is due prior to commencing construction activities.

1. Provide a designated person in charge of spill control and site maintenance. This person shall be on-site during operating hours and be responsible for supervising the use and storage of hazardous materials and shall take appropriate actions in the event of a release. This person shall also be available 24 hours per day in the event of a release during non-working hours.
2. Provide secondary containment of hazardous materials and refueling areas (containment equal to the size of the primary container or the largest container for multiple containers in one containment device). Sanitary, refueling and hazardous material storage <u>are not allowed</u> on the lower Grainger Springs site but can occur at the Grainger Springs Treatment Facility site, and the Contractor shall designate other areas for this in their plan. Prevent public access to hazardous materials left on site during non-working hours.
3. Construction vehicles and stationary equipment that are leaking fuel, hydraulic fluid, and/or other hazardous materials shall be removed from the springs protection area or repaired in place as soon as possible and may remain on the site in the interim only if leakage is completely contained. Keep spill containment and treatment materials on-site at all times. Depending on the frequency of occurrences, the Contractor may be required to provide spill containment devices on equipment at all times (i.e. diapers).
4. Store equipment and supplies adequate for the immediate clean-up of the worst-case hazardous materials spill on-site and close to hazardous materials.
5. All spills or leaks shall be immediately contained, reported, and cleaned up as required by state and local regulations, Washington Department of Ecology guidelines and as noted below. Upon detection of a leak, Contractor shall immediately stop work and correct the leak, contain the spill, and remove the contaminated material from the site for proper disposal. Over-excavate the contaminated site at least 2 feet in all directions to confirm that the spilled material has not penetrated further.

2.10.4 Dewatering

[CSI 31 23 19]

Part 1 – General

Submittals

The Contractor is to determine the scope, type, size, quantity, method of installation, operation, and removal of the dewatering system necessary to keep excavations de-watered to an elevation below the base of the excavation sufficient to stabilize the soils in the excavation and the surrounding areas, and to prevent flotation of partially completed structures. Prepare a detailed dewatering system plan and submit to the Owner for review prior to the installation of any dewatering system. This plan shall include, as a minimum, the scope, type, size, quantity, method of installation, operation, and removal of all dewatering systems.

© 2023 RH2 Engineering, Inc.

Part 3 – Execution

Installation/Construction

Dewatering systems must be positioned away from all building and utility construction so as to not become a part of the permanent facility.

Furnish, install, and operate all necessary machinery, appliances, and equipment to meet these water control requirements. De-water and dispose of the water so as not to cause injury to property or a nuisance to the public. Maintain sufficient pumping equipment and machinery in good working condition for all ordinary emergencies, including power outages, and have competent personnel available at all times to operate the equipment. The dewatering system shall not be shut down between shifts, on holidays, weekends, or during work stoppages.

Field Quality Control

The quality of all water discharged from the site shall meet all State and local requirements. Employ all means necessary to remove suspended solids, oils, trash, and other deleterious materials from water prior to discharging.

Control groundwater and surface water to prevent the softening of the bottom of excavations, or formation of quick conditions or boils during excavation. Lower ground water to 2 feet below the base of the excavation. The Owner will determine if soil conditions are unsuitable for supporting the improvements. The Contractor will determine soil conditions are unsuitable for performing work, placing materials, and proceeding with construction activities. When the dewatering system does not meet the specified requirements, and as a consequence there is a loosening or disturbance of the foundation soils, instability for the slopes, or damage to the foundation or structures occur, the Contractor shall at its own expense, supply all materials, labor, and equipment, and perform all work required for the restoration of foundation soil, slopes, or structure to the satisfaction of the Owner.

Restoration

Remove and backfill dewatering wells in accordance with applicable Federal and State regulations.

2.10.5 Temporary Access Roads

[CSI 01 55 13]

Part 1 – General

Summary

Provide temporary site access and maintain vehicular site access at all times. Access shall be of a quality to permit Contractor's forces and outside inspector's safe and convenient ingress/egress. Unless specifically provided for in other bid items, the cost of building and maintaining construction access shall be incidental with no separate payment. Any bid items for aggregate materials (e.g. crushed rock, ballast, etc.) shall <u>not</u> relate to construction access unless the description of that bid item specifically states inclusion of the construction access.

The Contractor shall maintain access to the existing Grainger Springs Pump House at all times.

© 2023 RH2 Engineering, Inc.

Part 3 – Execution

Repair/Restoration

Maintain all construction accesses during construction. The cost of such maintenance is incidental to the bid price. Maintenance includes repairing settled and damaged areas and providing dust control. Cost for maintenance due to rain, snow, wind, or other weather conditions is incidental to the bid price.

Cleaning

Wherever construction vehicle access routes intersect paved roads, make provisions to minimize the transport of sediment onto the paved road. Remove all dirt, mud, rocks, vegetation, or other deleterious material from all construction equipment prior to leaving the site. This may include spray washing, sweeping, or other physical methods needed to remove materials.

If sediment or other debris is transported onto a paved road surface, clean the road thoroughly by the end of the workday. Remove debris from roads by shoveling or sweeping. Street washing will be allowed only after debris has been removed in this manner.

2.11 Earthwork Materials

2.11.1 Common Work for Earthwork Materials

[CSI 31 05 00]

Part 1 – General

Acceptance at Site

Owner will review the site near the end of each pay period to determine the equivalent percentage of earthwork completed compared to the total earthwork lump sum price. Contractor will be paid based on the Owners judgement of percentage completed.

Part 2 – Products

Source Quality Control

All imported fill material shall be free of hydrocarbons (e.g. gasoline, diesel, oil, etc.), pesticides, herbicides, hazardous volatile organic compounds (VOCs) and synthetic organic chemicals (SOCs). Provide certification to the Owner that the fill is free of these chemicals.

Provide test data from an independent testing laboratory, ensuring the imported fill to be within the regulatory limits set by the Department of Health and Department of Ecology. This will include VOC and SOC tests on imported fill at random intervals averaging every 75 cubic yards. Imported fills found not to be compliant with regulatory standards shall be hauled off site and disposed of properly, at the sole expense of the Contractor.

© 2023 RH2 Engineering, Inc.

2.11.2 General Fill

[CSI 31 23 23.51]

Part 1 – General

Summary

All fill not specifically defined as another type shall be "General Fill".

References

Section 9-03.14(3) Common Borrow of the Standard Specifications.

Part 2 – Products

Components

General fill shall be soil free of organics, debris, and other deleterious materials, with no individual particles having a maximum dimension larger than 5 inches. The moisture content of the material and weather conditions at the time of placement will be used to determine the suitability of native materials for backfill as general fill.

Part 3 – Execution

Installation/Construction

Compact general fill in uniform layers not exceeding 12 inches in loose thickness and to at least 90 percent maximum dry density based on the ASTM D-1557 (modified) test procedure or 95 percent maximum dry density based on the ASTM D-698 (standard) test procedure.

2.11.3 Structural Fill

[CSI 31 23 23.52]

Part 1 – General

Summary

All fill placed below and against building components, building structures, vaults, manholes, handholes, slabs, sidewalks, and drives shall be "Structural Fill" unless other fill materials are specifically shown on the Plans. The structural fill material has been selected to support the weight of the structure in combination with the existing native material and to prevent adverse movement during an earthquake. Take particular care to maintain the integrity of the design by using structural fill where shown.

References

Where free draining material for structural fill is required as indicated on the Plans or needed to maintain compaction in adverse weather conditions, it shall conform with Section 9-03.14(1), "Gravel Borrow" of the Standard Specifications.

Structural fill for foundation subgrades, or where free drainage is not required through the structural fill shall conform with 9-03.14(2) "Select Borrow" of the Standard Specifications.

© 2023 RH2 Engineering, Inc.

Part 2 – Products

Components

When structural fill will be used around pipes, 100-percent of the material shall pass a 1-inch sieve.

Structural fill shall be soil free of organics, debris, and other deleterious materials. Native on-site materials are not suitable for use as structural fill.

Part 3 – Execution

Installation/Construction

The moisture content of the material and weather conditions at the time of placement will be used to determine the suitability of native materials for backfill as structural fill. Structural fill shall bear on firm base and be placed in uniform layers not exceeding 12 inches in loose thickness. The backfill area must be free of standing water and the subgrade soils must be stable. Each layer of structural fill shall be compacted to at least 95 percent of its maximum dry density based on the ASTM D-1557 (modified) test procedure or 98 percent of its maximum dry density based on the ASTM D-698 (standard) test procedure.

2.11.4 Pipe Bedding

[CSI 31 23 23.53]

Part 1 – General

Summary

Fill placed below and around buried utilities. The bedding material has been selected to support the weight of the utility by distributing the load so that the completed utility and backfill system does not weigh more than the native material. The grain size has been selected so that the bedding will not migrate into the bottom of the trench. Take care to maintain the integrity of the utility design by using the appropriate pipe bedding material where shown.

References

Pipe bedding used around restrained joint pipe must be crushed surfacing and/or sand. Rounded gravels and pea gravel are not acceptable. Silty sands may be used with the Owner's approval but may require additional length of restrained joint pipe.

For ductile iron, steel, or concrete pipe larger than 4-inch diameter: Bedding material shall conform with Section 9-03.12(3) "Gravel Backfill for Pipe Zone Bedding" of the Standard Specifications except all shall pass a 1-inch sieve.

For PVC and HDPE water piping regardless of diameter: Bedding shall conform with Section 9-03.13 "Backfill for Sand Drains" of the Standard Specifications or as approved by the Owner.

For PVC sewer and storm piping, CPEP regardless of diameter, conduit, service lines, and all other piping 4-inch in diameter or less: Bedding shall conform with Section 9-03.13 "Backfill for Sand Drains" of the Standard Specifications or as approved by the Owner.

© 2023 RH2 Engineering, Inc.

Part 3 – Execution

Installation/Construction

Bedding material shall surround the pipe and conduits to the limits shown on the Plans and provide uniform support along the entire length. Excavate bell holes to prevent concentrated loading at joints or bridging of the pipe. All bedding material shall bear on firm subgrade and be compacted to firm and unyielding condition.

2.11.5 Trench Backfill

[CSI 31 23 23.54 or 31 23 33]

Part 1 – General

Summary

All fill placed above the pipe bedding in a trench shall be "Trench Backfill". The trench backfill material has been selected to distribute surface loads over the utility. The grain size has been selected so that the trench backfill will not migrate into the pipe bedding or trench walls. Take particular care to maintain the integrity of the utility design by using the appropriate trench backfill material where shown.

References

Trench backfill shall consist of materials conforming to Section 9-03.19 "Bank Run Gravel for Trench Backfill" of the Standard Specifications or as approved by the Owner.

Part 3 – Execution

Installation/Construction

Place and compact trench backfill above the pipe bedding to finished grade elevations in unrestored areas or to subgrade elevations in restored areas.

In unimproved or landscaped areas place trench backfill in uniform layers not to exceed 12 inches in loose thickness. Each lift is to be compacted to at least 90 percent of its maximum dry density based on the ASTM D-1557 (modified) test procedure or 92 percent of its maximum dry density based on the ASTM D-698 (standard) test procedure.

In areas where the trench will support roadways or vehicle access areas, trench backfill shall be placed in uniform layers not to exceed 8 inches in loose thickness. Each lift is to be compacted to at least 95 percent of its maximum dry density based on the ASTM D-1557 test procedure (modified proctor) from 0 to 4 feet below finished surface and 90 percent below 4 feet.

© 2023 RH2 Engineering, Inc.

2.11.6 Gravel Backfill for Drains

[CSI 31 23 23.55]

Part 1 – General

Summary

All fill placed around drain pipes in a trench shall be "Gravel Backfill for Drains" to provide drainage for stormwater runoff.

References

Gravel backfill for drains shall conform with Section 9-03.12(4) of the Standard Specifications.

2.11.7 Gravel Base Course

[CSI 32 11 23.10]

Part 1 – General

Summary

All fill placed directly under and against paving, foundations, and structures shall be "Gravel Base Course" unless otherwise called out on the Plans.

References

Aggregate for gravel base course under structures, and foundations shall conform to Section 9-03.10 Aggregate for Gravel Base or 9-03.9(3) Crushed Surfacing Base Course of the Standard Specifications.

Aggregate for gravel base course under roadways, paved areas, sidewalks, and for gravel areas shall conform to Section 9-03.9(3) Crushed Surfacing Base Course of the Standard Specifications.

2.11.8 Gravel Top Course

[CSI 32 11 23.11]

Part 1 – General

Summary

Gravel travelled surfaces shown on the Plans shall be "Gravel Top Course". Gravel top course may also be required directly under paving by the road jurisdiction or if shown on the plans.

References

Aggregate for gravel top course shall conform to Section 9-03.9(3) Crushed Surfacing Top Course and Keystone of the Standard Specifications.

© 2023 RH2 Engineering, Inc.

2.11.11 Pea Gravel

[CSI 33 05 09 52 or 32 11 51]

Part 2 – Products

Materials

Pea Gravel shall be clean, free-draining, durable uncrushed rock, meeting the following grading requirements:

Sieve Size	Percent Passing
3/8”	85-100
#4	10-30
#8	0-10
#16	0-5
#200	<1

2.11.20 Geotextile Fabric

[CSI 31 32 19.16 or 31 34 19.16]

Part 1 – General

Delivery, Storage, and Handling

Ship, store, place, overlap, and secure fabric based on manufacturer requirements.

Part 2 – Products

Materials

Chose geotextile fabric to meet the requirements based on place and purpose of use.

Geotextile fabric called out on the Plans to separate drain rock or French drains from surrounding soils shall be equal to Tencate Mirafi 140N.

Geotextile fabric placed between quarry spalls and fill to separate soil fines shall be equal to Tencate Mirafi 160N.

Geotextile fabric called out to drain behind a wall without the use of drain rock shall be equal to Tencate Mirafi G100W.

Geotextile fabric for embankment stabilization shall be equal to Mirafi Miramat TM8.

Geotextile fabric placed below crushed rock in road subgrade shall be equal to

Tencate Mirafi 500X

Other locations may require a specialized geotextile fabric and if so shall either be identified in the Plans or geotechnical report.

© 2023 RH2 Engineering, Inc.

2.12 Road Surfacing

[CSI 32 10 00]

2.12.2 Cement Concrete Pavement

[CSI 32 13 13]

Part 1 – General

References

Cement concrete pavement, sidewalks, curb and gutter shall meet the requirements of Division 3. Construction shall comply with Section 5-05 of the Standard Specifications.

Part 3 – Execution

Examination

Evidence of pavement damage such as surface cracking, ponding, or other variations in surface consistency shall be investigated by the Contractor and reported to the Engineer.

Construction

Pavement areas damaged by construction activities shall be removed and reconstructed at the Contractor's expense to the road agency's standards.

Adjust manhole covers, valve covers, survey markers, and other existing surface features to the finished grade of the new surfacing in conformance with the local road agency standards. Otherwise, set as follows:

- Storm sewer grates: 0.10 foot below finished grade.
- Valve boxes, manhole covers, survey markers: 0.00 to 0.01 foot below finished grade.

2.12.3 Hot Mix Asphalt (HMA)

[CSI 32 12 16]

Part 1 – General

References

Hot Mix Asphalt (HMA) shall comply with Section 5-04 of the Standard Specifications. All HMA shown on the Plans shall be Commercial HMA unless otherwise noted. Furnish, place, spread, and compact to the thickness shown on the Plans.

HMA used for road paving and patching shall comply with Section 5-04 of the Standard Specifications for HMA Class ½-inch. HMA used for driveways and parking lots shall be HMA Class ⅜-inch. Furnish, place, spread, and compact to the thickness shown on the Plans.

© 2023 RH2 Engineering, Inc.

2.13.3 Selective Tree and Shrub Removal

[CSI 31 13 13]

Part 3 – Execution

Installation/Construction

Trees and shrubs which are to be removed as indicated on Plans shall be removed completely including roots, stumps, branches, and stems, or as directed by Owner unless shown otherwise on the Plans.

2.20 EARTH MOVING

[CSI 31 20 00]

2.23 Excavation

[CSI 31 23 16]

Part 1 – General

Summary

Excavate as necessary to construct the improvements shown.

Part 2 – Products

Materials

All excavated material below the organic layer can be re-used as general backfill if it is properly protected from water saturation, meets the specification for the backfill purpose, and is approved by the Owner. Approval of material as backfill will be made the moment before placement of the material as backfill. Weather conditions may make previously approved material unsuitable for backfill requiring the material to be removed from the project site.

Excavated material that is not used as backfill shall be disposed off-site. All permits for the disposal of excavated material shall be obtained by the Contractor. A copy of all permits and the locations of each disposal site shall be submitted to the Owner.

Part 3 – Execution

Installation/Construction

Excavation includes the digging, scraping, and removing existing native material, abandoned or interfering utilities, abandoned or interfering structures, and any other obstacles necessary for the construction of the improvements. Excavation includes utility excavation, structural excavation, and grading excavation.

Perform utility excavation to the depths necessary to complete the utility work shown.

Perform structural excavation to the limits shown and established by the Owner. Extend the base of the excavation laterally a minimum of 2 feet beyond the structure unless specified otherwise on Plans.

© 2023 RH2 Engineering, Inc.

Excavated material may be stockpiled temporarily on-site. Temporary stockpiling of excavated material will not be permitted outside the construction limits at any time.

Examination

The Owner will evaluate the base of the excavation to determine if it is suitable for backfilling. The Owner will evaluate the stability of the base of excavation by determining if all significant organic soils or other unsuitable materials have been removed.

Construction

Perform excavation required by the Owner that is beyond the depth shown, per the direction of the Owner. The Contractor will be reimbursed for additional excavation as specified in Division 18, "Measurement and Payment" or by force account if not specified.

2.25 Temporary Erosion and Sedimentation Control

[CSI 01 57 13]

2.25.2 Contractor Provided Certified Erosion and Sedimentation Control Lead

[CSI 01 57 13.10]

Part 1 – General

Summary

Provide a Certified Erosion and Sedimentation Control Lead (CESCL) as part of the regular work force for the project. This person shall be a site superintendent, project manager, or site laborer regularly on the project site during earthwork operations.

Submittals

Provide documentation of the Certification to the Owner and reviewing authority if applicable with a copy of such certification always available in the job shack. State Department of Ecology Certification shall be valid and up to date for this person throughout the duration of the earthwork operations of the project.

2.25.3 Temporary Erosion and Sedimentation Control

[CSI 01 57 13.13]

Part 1 – General

Quality Assurance

The Temporary Erosion and Sedimentation Control (TESC) plans shown on the construction Plans are the minimum requirements for the anticipated site conditions. The Contractor shall add additional TESC facilities or processes as necessary to ensure that erosion and sedimentation problems do not occur. The Contractor shall inspect the TESC facilities daily and maintain the systems as necessary to prevent off-site damage.

© 2023 RH2 Engineering, Inc.

Part 2 – Products

Materials

Straw or mulch shall be applied to exposed surfaces to minimize erosion and filter surface water runoff. Where straw or mulch is required for erosion control, apply to a minimum thickness of 2-inches. Straw shall not include Reed Canary grass.

Part 3 – Execution

Installation/Construction

All TESC systems including; fencing, earth berms, grasses, straw, mulch, culverts, drain pipe, outfalls, and other items required by for this project, must be installed prior to any clearing, grubbing, excavation, grading work, or other work that could result in off-site stormwater or material flows. TESC systems must remain in place throughout the duration of the construction activities. The systems may be relocated to complete construction activities if their location impedes the associated work. If the systems are relocated to complete any work, they must be reinstalled to protect the construction and surrounding areas prior to commencing work on other portions of the project.

Install systems such as mulch, plastic sheeting and hydroseed as soon as clearing, grading and excavation are complete if sites are 1-acre or less. Take care and diligence to minimize erosion exposure and provide TESC measures as shown on the Plans and required by construction practice.

Install stabilized construction entrances and wash pads at the beginning of construction activities and maintain for the duration of the project. Keep wash pads clean to prevent the transport of sediment onto adjoining roads.

Install earth berms as necessary to prevent surface water migration into excavations or off the project site. Route surface water intercepted by earth berms to an approved stormwater conveyance system. Ensure that the concentration of surface water at the earth berm does not erode the adjoining or downstream properties. Remove sediment deposited against the earth berm so surface water can flow freely. Do not remove the earth berm before the stabilization of the surface downhill from the berm.

2.25.4 Temporary Storm Water Pollution Control

[CSI 01 57 23]

Part 3 – Execution

Field Quality Control

The Contractor shall be responsible for meeting all construction stormwater discharge water quality requirements including State of Washington (WAC 173-220-020), Construction Stormwater Permit requirements and local requirements regardless of weather conditions.

If the project is fined by the permitting authority, that fine shall be paid by the Contractor at no additional cost to the Owner.

© 2023 RH2 Engineering, Inc.

2.25.5 Filter Fabric Fence

[CSI 01 57 13 or 01 57 23]

Part 2 – Products

Materials

Filter fabric per section 8-01.3(9)A2 and section 9-33.2(1), Table 6, of the WSDOT Standard Specifications.

Part 3 – Execution

Installation/Construction

Install a filter fabric fence to allow the collection and passage of surface water through the fabric before discharge off site. When joints are necessary, splice filter fabric together at a support post with a minimum overlap of six inches. Secure both ends of the fabric to the post. Install the filter fabric fence following the contours of the existing grade where feasible. Drive the fence posts securely into the ground a minimum of 30-inches and spaced apart at a maximum of six feet. Fasten a wire mesh support fence securely to the uphill side of the posts using heavy-duty wire staples at least one inch long, tie wires, or wire rings. Extend the wire into the trench a minimum of four inches and not more than 36 inches above the existing surface. Excavate an 8-inch by 12-inch trench on the uphill side of the fence for securely burying the lower edge of the fabric fence. Extend at least 20 inches of the filter fabric fence continuously into the trench. Extend the filter fabric fence 36-inches above the existing grade. Secure the filter fabric placed in the trench with backfill material of three-quarter inch washed rock. Place the backfill material in the trench and on either side of the fence as shown on the construction Plans.

Field Quality Control

Inspect the filter fabric fence immediately after each rainfall and at least once daily during periods of prolonged rainfall. Repair or replace sections of the filter fabric fence that are not filtering surface water. The filter fabric fence may be removed after the threat of off-site contamination has passed.

2.30 SITE IMPROVEMENTS

[CSI 32 30 00]

2.31 Fencing and Gates

[CSI 32 31 00]

© 2023 RH2 Engineering, Inc.

2.31.1 Common Work for Fencing

[CSI 32 31 05]

Part 1 – General

Related Sections

- Division 1.52.20 Locks and Keys
- Division 3 Concrete
- Division 10.14.23 Signage
- Division 11.40 Gates

Part 3 – Execution

Preparation

Clear the area along the fence path, remove surface irregularities and grade earth smooth and continuous prior to fence installation.

2.31.3 Chainlink Fence

[CSI 32 31 13]

Part 1 – General

Summary

This section describes the requirements for the chainlink fence located as shown and detailed on the Plans and these specifications.

Related Sections

Division 2.31.1 Common Work for Fences

Division 3.31.3 Post Footings

References

Chainlink Fence Manufacturers Institute Product Manual Specifications

DOT Standard Specifications Section 8-12

ASTM F626, A392, A817, F668, F1043, F1083, A121, F567

Submittals

Galvanizing information, steel quality standards, hardware quality standards.

Dimensional drawings including details, finishes, accessories and foundations.

© 2023 RH2 Engineering, Inc.

Part 2 - Products

Materials

Obtain chain link fences and gates, including accessories, fittings, and fastenings, from a single source.

Chain-Link (woven wire fabric) fencing shall be commercial grade, as detailed on the Plans and in accordance with Section 8-12 of the Standard Specifications except as modified herein.

Components

Fence Fabric: Polymer coated galvanized wire: ASTM F668 class 2b, fused and adhered.

Size: Helically wound and woven to height of as indicated on drawings with 2-inch diamond mesh and core wire gauge of 9. Polymer coating gauge of 8, if required, shall not be included in the wire size measurement.

Selvage of fabric: twisted and barbed at top and twisted at bottom unless noted otherwise on the Plans.

Steel Fence Framework: Steel pipe - Type I: ASTM F1043 Group IC; minimum yield strength of 50,000 psi. Outside diameter (OD) sizes as shown on the Plans. Type B external coating, hot dip galvanized zinc 0.9 oz/ ft^2 with a clear polymeric overcoat, Type D interior 90% zinc-rich coating having a minimum thickness of 0.30 mils.

Accessories

Chain link fence accessories per ASTM F626 Provide items required to complete fence system. Galvanize each ferrous metal item and finish to match framing.

Post caps: Formed steel weather tight closure cap for pipe posts. Provide one cap for each post. Cap to have provision for barbed wire when necessary.

Top rail and rail ends: Pressed steel per ASTM F626, for connection of rail and brace to terminal posts.

Top rail sleeves: 6-inch (178 mm) expansion sleeve with a minimum 0.137-inch wire diameter and 1.80-inch length spring, allowing for expansion and contraction of top rail.

Wire ties: 9-gauge galvanized steel wire for attachment of fabric to line posts. Thirteen gauge for rails and braces.

Brace and tension (stretcher bar) bands: Pressed steel, minimum 300-degree profile curvature for secure fence post attachment.

Tension (stretcher) bars: One piece lengths equal to 2 inches less than full height of fabric with a minimum cross-section of $^3/_{16}$ inch by ¾-inch. Provide tension (stretcher) bars where chain link fabric meets terminal posts.

Tension wire (used when top rails are not required): Polymer Steel Tension Wire ASTM F1664 class 2B, fused and adhered, 6 gauge, with tensile strength of 75,000 psi. Hog ties are permissible.

Tie rod, truss rods, and tightener: Steel rods with minimum diameter of ⅜-inch. Capable of withstanding a tension of minimum 2,000 lbs.

© 2023 RH2 Engineering, Inc.

Barbed wire: ASTM A121 Class 3, zinc coated steel wire double-strand, 14 gauge twisted line wire with galvanized steel, 4 point barbs spaced approximately 5 inches on center.

Barbed wire supporting arms: Pressed steel arms with provisions for attaching three rows of barbed wire. Arms shall withstand 250 lb. downward pull at the outermost end of arm without failure. Provide six strands double "V" arms. Provide intermediate arms with hole for passage of top rail.

Nuts and bolts to be galvanized.

Finishes

Colors shall be available for owner selection including dark green, olive green, brown, and black in compliance with ASTM F934. All fence components shall be coated including mesh, posts, caps, clips, and rails.

Fabrication

Fence frames that require welding shall be hot dipped galvanized in the shop unless approved otherwise by the Owner.

Part 3 – Execution

Installers

Installers shall have a minimum of two years of experience. References from three previous projects shall be submitted for review during shop drawing submittal.

Examination

Verify areas to receive fencing are completed to final grades and elevations.

Ensure property lines and legal boundaries of work are clearly established.

Perform complete utility locates within the areas of fencing to verify conflicting utilities. Fence posts may require adjustment to avoid utilities by a minimum of 2-feet.

Installation/Construction

Chainlink Fence Framing Installation:

A. Install chain link fence in accordance with ASTM F567 and manufacturer's instructions.

B. Locate terminal post at each fence termination and change in horizontal or vertical direction of 30 degrees or more.

C. Space line posts uniformly at 10-feet on center maximum and to avoid utilities by 2-feet minimum.

D. Concrete set terminal and gate posts: Drill holes in firm, undisturbed or compacted soil. Trowel finish around post. Slope to direct water away from posts. Footings shall be sized per schedule on the Plans.

E. Check each post for vertical and top alignment and maintain in position during placement and finishing operations.

© 2023 RH2 Engineering, Inc.

F. Bracing: Install horizontal pipe brace at mid-height for fences 8-feet tall and over, on each side of terminal posts. Firmly attach with fittings. Install diagonal truss rods at these points. Adjust truss rod, ensuring posts remain plumb.

G. Tension wire: If shown on the Plans, install tension wire before stretching fabric and attach to each post with ties. Secure tension wire to fabric with 12½ gauge hog rings 24 inches O.C.

H. Top rail: If shown on the Plans, install lengths, 21-feet. Connect joints with sleeves for rigid connections for expansion/contraction.

I. Brace Rails for fabric height 8-feet and over. Install brace rails between terminal posts and adjacent line posts with fittings and accessories. Install brace rails at each gate post and each corner post with angle change exceeding 30 degrees.

J. Bottom Rails: If shown on the Plans install bottom rails between posts with fittings and accessories.

Chain Link Fabric Installation

A. Fabric: Install fabric on side facing outward from site and attach so that fabric remains in tension after pulling force is released. Leave no more than 3-inches between finish grade and bottom selvage. Attach fabric with wire ties to line posts and tension wire at 15-inches on center and to rails and horizontal braces at 24-inches on center.

B. Tension (stretcher) bars: Pull fabric taut; thread tension bar through fabric and attach to terminal posts with bands or clips spaced maximum of 15-inches on center. Hog ties are allowed.

Accessories

A. Tie wires: Bend ends of wire to minimize hazard to persons and clothing.

B. Fasteners: Install nuts on side of fence opposite fabric side for added security.

C. Barbed wire: Uniformly space parallel rows of barbed wire on security side of fence. Pull wire taut and attach with clips or in slots of each extension.

2.40 DEMOLITION AND STRUCTURE MOVING

[CSI 02 40 00]

2.41.16 Structure Demolition

[CSI 02 41 16]

Part 1 – General

Summary

Demolish, remove and dispose of the existing pump house including the pump house structure (roof, walls, foundation), mechanical piping (except pump to be reused), electrical equipment (except those called out to be reused), and all associated items and materials within and outside the pump house, down to bare earth. Fill in existing clear wells with structural fill and abandon in place. Abandon below grade utilities per plans.

© 2023 RH2 Engineering, Inc.

If discovered, asbestos and lead containing material shall be removed and disposed of in accordance with these specifications.

References

- ANSI A10.6 Safety Requirements for Demolition Operations
- WAC Section 173-304-461, Inert waste and demolition waste landfilling facility requirements.
- WAC Section 296-62-07721, Communication of hazards.
- WAC Section 296-155-260, Fire protection.
- WAC Section 296-155-775, Preparatory operations.
- WAC Section 296-155-780, Stairs, passageways, and ladders.
- WAC Section 296-155-795, Removal of walls, masonry sections, and chimneys.
- WAC Section 296-155-800, Manual removal of floors.
- WAC Section 296-155-805, Removal of walls, floors, and material with equipment.
- WAC Section 296-155-815, Storage.
- WAC Section 296-155-820, Removal of steel construction.
- WAC Section 296-155-825, Mechanical demolition.
- OSHA

Submittals

Submit a comprehensive demolition plan describing the proposed sequence, methods and equipment for demolition, removal and disposal of structures, including salvage where warranted. Do not proceed with demolition work until the Owner has approved the comprehensive demolition plan.

Provide to the Owner the location of all disposal sites, and copies of the permits and approvals for demolition and for disposal sites, if required, before any waste is hauled off the site.

Regulatory Requirements

The Contractor shall obtain all special permits and licenses and give all notices required for performance and completion of the demolition and removal work, hauling, and disposal of debris. The Contractor shall acquire all permits and approvals required for the use of the disposal site(s). The cost of any such permits and approvals shall be included in the Bid Price.

Schedules

The Owner desires to keep the existing pump house in working condition until the proposed pump house is operational. Coordinate all interruptions in service, decommissioning, demolition with the Owner to meet the startup and demolition schedule outlined on the plans.

© 2023 RH2 Engineering, Inc.

Warranty

Protect, indemnify and save harmless the Owner from any damages that may arise from the Contractor's activities in making these arrangements. Such indemnity shall be in accordance with RCW 4.24.115 as amended by CH. 305, Laws of 1986. Any action required to satisfy any permit and/or any approval requirements in a Contractor provided deposal site shall be performed by the Contractor at no additional expense to the Owner.

Part 3 – Execution

Preparation

All structures, utilities, and properties not specifically targeted for demolition as shown on the Contract Plans, shall be protected from damage or interruption by the Contractor's activities. Responsibility for safety and protection of buildings near or in the project limits are the Contractor's. Repair or replace damaged structures, utilities, and/or properties to the satisfaction of the Owner.

The location of underground utilities; power, telephone, fiber optic, cable, gas, etc., shown on the Contract Drawings are illustrative only. The actual locations may vary from those shown. The Contractor is responsible for verifying all utility locations. No extra costs are allowed for delays resulting from utility conflicts for which the Contractor is responsible. On questions regarding the disposition of existing utilities, improvements, or buildings, the Contractor shall contact the Owner for advisement.

Conduct demolition and removal work in a manner to minimize the spread of dust and flying particles.

Field Quality Control

Burying or burning of trash and debris on the site is not permitted.

Remove trash and debris frequently so their presence will not delay the progress of the work.

Removed materials, trash, and debris shall become the property of the Contractor and be removed from the Owner's property and disposed of in a legal manner. Location of disposal site and length of haul are the Contractor's responsibility.

2.50 EXCAVATION SUPPORT AND PROTECTION

[CSI 31 50 00]

2.51 Contractor Designed Shoring

[CSI 31 50 10]

Part 1 – General

Summary

Where shoring, sheet piling, sheeting, bracing, lagging, or other supports are necessary to prevent cave-ins or damage to existing structures, it is the responsibility of the Contractor to design, furnish, place, maintain, and remove supports in accordance with applicable laws, codes, and safety requirements.

© 2023 RH2 Engineering, Inc.

References

Chapter 296-155 of WAC, "Safety Standards for Construction Work, Part N, Excavation, Trenching, and Shoring".

OSHA

Quality Assurance

Where the Contractor is required to provide the shoring design, it shall be prepared by a competent person as defined by WAC 296-155-650. Before beginning any excavation that is governed by the shoring requirements, the Contractor shall submit their stamped shoring plan and calculations to the Owner for approval. The stamp must be present on all Plans and calculations, and all submittals must be approved by the Owner prior to starting work.

Part 3 – Execution

Installation/Construction

Design, planning, installation, and removal of sheeting, shoring, sheet piling, lagging, and bracing shall maintain the undisturbed state of soil below and adjacent to excavation.

2.60 CONTAMINATED & WASTE MATERIALS HANDLING

2.60.2 Waste Material Control

[CSI 01 74 19]

Part 1 – General

Quality Assurance

Adhere to all requirements of federal, state, and local statutes and regulations dealing with pollution. Permit no public nuisances.

Use only dump sites that are approved by the regulatory agency having jurisdiction, and present proof of approval upon request.

Follow all requirements and guidelines of the Puget Sound Air Pollution Control Agency (PSAPCA) and other associated agencies.

Part 3 – Execution

Installation/Construction

The Contractor shall take precautions to warn, protect, and prevent the public from all hazards that exist on site due to demolition or construction operations. Surround stockpiled debris with yellow warning tape attached to lath, stakes, poles, or fencing to warn the public of any potential hazard.

Use water sprinkling, temporary enclosures, or other methods to limit dust and dirt from rising and scattering in the air. Collect and clean surface water runoff that is contaminated with site debris, silt, or other material that adversely affects water quality prior to discharge. On-site collection ponds may not be used to keep silt laden water from entering the storm water collection system.

© 2023 RH2 Engineering, Inc.

Do not use water to control dust when its use may create hazardous or objectionable conditions such as ice formation, flooding, or pollution.

Minimize the amount of dust and other airborne particles caused by any demolition, excavation, stockpiling, or removal activities. Implement dust control measures prior to the beginning of work activities. Exposed soil may be wetted with water or covered to minimize dust creation. Water runoff from the wetting procedure shall be accumulated and cleaned prior to disposal. Remove water runoff accumulation from the site prior to project completion.

Cleaning

Keep the construction area clean and orderly. Upon completion of the work, leave buildings broom clean and all parts of the work clean and free of rubbish and excess material of any kind. Leave fixtures, equipment, walls, and floors clean and free of stains, paint, roofing splashes, or other marks or defects. Upon completion, restore site and all work or equipment and material storage areas to their original conditions. Remove all miscellaneous unused material resulting from work and dispose of it in a manner satisfactory to the Owner. The site, through the progress of construction, shall be kept as clean as possible and in a neat condition.

2.61 Contaminated Materials

2.61.2 Toxic Spill or Release Contact Requirements

[CSI 02 61 40]

Part 3 – Execution

Field Quality Control

During construction, if there is any toxic substance spill or release discharged into the environment, report the location, quantity, date and time of the spill or release to Washington State Emergency Management at 1 (800) 258-5990 and the Owner's representative. Spills shall be monitored, contained, and cleaned up to applicable codes at the Contractor's expense.

2.61.3 Hazardous Lead Materials

[CSI 02 83 00 (facility) 02 61 13 (soils)]

Part 1 – General

Quality Assurance

Unless noted otherwise on the project Plans or specifications, the Owner is not aware of any hazardous lead containing materials on or in the project site. If the Contractor discovers hazardous lead materials, they shall notify the Owner as to where hazardous lead materials are located. Due to the OSHA Right to Know Laws, the Owner is required to notify the Contractor that hazardous lead materials exist or if not known but discovered, the Owner is required to mitigate the removal of the hazardous lead materials.

© 2023 RH2 Engineering, Inc.

Site Conditions

The Owner is not aware of any hazardous lead containing materials on or in the project site. If hazardous lead materials are discovered by the Contractor, the Owner will mitigate the removal of the hazardous material.

Part 3 – Execution

Installers

Follow all requirements and regulations for hazardous waste removal and disposal. The Contractor must meet the following qualifications to be eligible to be selected to perform lead removal and demolition or disposal work for this project:

1. Meet State and Local OSHA and WSHA requirements for lead abatement.
2. Meet State hazardous removal requirements (Washington Department of Ecology)
3. Not have received a citation from the Puget Sound Air Pollution Control Agency related to lead abatement within the last year.
4. Possess occurrence based liability insurance coverage.

2.61.26 Hazardous Asbestos Materials

[CSI 02 61 26 (soils) 02 82 00 (facility)]

Part 1 – General

Quality Assurance

If the Contractor discovers hazardous asbestos materials, they shall notify the Owner as to where hazardous asbestos materials are located. Due to the OSHA Right to Know Laws, the Owner is required to notify the Contractor that hazardous asbestos materials exist or if not known but discovered, the Owner is required to mitigate the removal of the hazardous asbestos materials. Abandon asbestos cement piping in place.

Site Conditions

The Owner is not aware of any hazardous asbestos containing materials on or in the project site. If hazardous asbestos materials are discovered by the Contractor, the Owner shall mitigate the removal of the hazardous material.

Follow all requirements and regulations for hazardous waste removal and disposal. The Contractor must meet the following qualifications to be eligible to be selected to perform asbestos demolition or disposal work for this project:

Possess a Certified Asbestos Abatement Contractors' license or retain the services of a Certified Asbestos Abatement Contractor.

Have performed Asbestos Abatement of a similar nature within the last year.

Not have received a citation from the Puget Sound Air Pollution Control Agency related to asbestos abatement within the last year.

Possess occurrence-based liability insurance coverage.

© 2023 RH2 Engineering, Inc.

2.90 LANDSCAPING

[CSI 32 90 00]

2.90.1 Common Work for Landscaping

[CSI 32 90 05]

Part 3 – Execution

Examination

Examine proposed planting areas and conditions of installation. Do not start planting work until unsatisfactory conditions are corrected and approved by the Owner's Authorized Representative.

Notify Owner's Authorized Representative at least 7 working days prior to installation of plant material.

The Owner will make final inspection to determine acceptance of planted areas, upon Contractor's request. Provide notification at least 10 working days before requested inspection date. Planted areas will be accepted, provided all requirements, including maintenance, have been complied with and plant materials are alive and in a healthy, vigorous condition after final acceptance of the project.

Upon one year after Substantial Completion, the Owner will assume plant maintenance.

2.90.2 Landscape Grading

[CSI 32 91 19]

Part 3 – Execution

Installation/Construction

Perform fine grading within Contract limits, including adjacent transition areas, to new elevations, levels, profiles and contours indicated. Provide subgrade surfaces parallel to finished surface grades, unless specified otherwise. Provide uniform levels and slopes between new elevations and existing grades. All fills required to achieve subgrades shall be compacted per requirements of the fill type as noted above.

Perform grading, within branch spread of existing trees scheduled to remain, by hand methods to elevations indicated. Cut roots cleanly to depth 3 inches below proposed finish grade. Treat cut roots over 1-inch in diameter with asphaltic pruning paint.

© 2023 RH2 Engineering, Inc.

2.90.3 Soil Amendments

2.90.3.4 Mulch and Amendments - Post-Construction Soil Quality and Depth

[CSI 32 91 13.16]

Part 1 – General

Soil Retention

Retain, in an undisturbed state, the duff layer and native topsoil to the maximum extent practicable. In any areas requiring grading, remove and stockpile the duff layer and topsoil on site in a designated, controlled area, not adjacent to public resources and critical areas, to be reapplied to other portions of the site where feasible.

Soil Quality

All areas subject to clearing and grading that have not been covered by impervious surface, incorporated into a drainage facility or engineered as structural fill or slope shall, at project completion, demonstrate the following:

1) A topsoil layer with a minimum organic matter content of 10% dry weight in planting beds, and 5% organic matter content in turf areas, and a pH from 6.0 to 8.0 or matching the pH of the undisturbed soil. The topsoil layer shall have a minimum depth of eight inches except where tree roots limit the depth of incorporation of amendments needed to meet the criteria. Subsoils below the topsoil layer should be scarified at least 4 inches with some incorporation of the upper material to avoid stratified layers, where feasible.
2) Mulch planting beds with 2 inches of organic material.
3) Use compost and other materials that meet the following organic content requirements:
    a) The organic content for "pre-approved" amendment rates can be met only using compost meeting the Compost for Post-Construction Soil Quality and Depth listed below.
    b) Calculated amendment rates may be met through use of composted material meeting (a.) above; or other organic materials amended to meet the carbon to nitrogen ratio requirements, and not exceeding the contaminant limits identified in Table 220-B, Testing Parameters, in WAC 173-350-220.

The resulting soil should be conducive to the type of vegetation to be established.

Compost for Post-Construction Soil Quality and Depth

To ensure that the BSM will support healthy plant growth and root development, contribute to biofiltration of pollutants, and not restrict infiltration when used in the proportions cited herein, the following compost standards are required.

- Meets the definition of "composted material" in WAC 173-350-100 and complies with testing parameters and other standards in WAC 173-350-220.

© 2023 RH2 Engineering, Inc.

- Produced at a composting facility that is permitted by the jurisdictional health authority. Permitted compost facilities in Washington are included in a spreadsheet titled Washington composting facilities and material types – 2017 at the following web address: https://ecology.wa.gov/Waste-Toxics/Reducing-recycling-waste/Organic-materials/Managing-organics-compost
- The compost product must originate a minimum of 65 percent by volume from recycled plant waste comprised of "yard debris," "crop residues," and "bulking agents" as those terms are defined in WAC 173-350-100. A maximum of 35 percent by volume of "post-consumer food waste" as defined in WAC 173-350-100, including biosolids or manure, may be substituted for recycled plant waste.
- Stable (low oxygen use and CO2 generation) and mature (capable of supporting plant growth) by tests shown below. This is critical to plant success in bioretention soil mixes.
- Moisture content range: no visible free water or dust produced when handling the material.
- Tested in accordance with the U.S. Composting Council "Test Method for the Examination of Compost and Composting" (TMECC), as established in the Composting Council's "Seal of Testing Assurance" (STA) program. Most Washington compost facilities now use these tests.
- Screened to the following size gradations for Fine Compost when tested in accordance with TMECC test method 02.02-B, Sample Sieving for Aggregate Size Classification."
- Fine Compost shall meet the following gradation by dry weight:
    - Minimum percent passing 2": 100%
    - Minimum percent passing 1": 99%
    - Minimum percent passing 5/8": 90%
    - Minimum percent passing ¼": 75%
- pH between 6.0 and 8.5 (TMECC 04.11-A). "Physical contaminants" (as defined in WAC 173-350-100) content less than 1% by weight (TMECC 03.08-A) total, not to exceed 0.25 percent film plastic by dry weight.
- Organic matter content of 40% to 65% (TMECC 05.07-A "Loss on Ignition)
- Soluble salt content less than 4.0 dS/m (mmhos/cm) (TMECC 04.10-A "Electrical Conductivity, 1:5 Slurry Method, Mass Basis")
- Maturity indicators from a cucumber bioassay (TMECC 05.05-A "Seedling Emergence and Relative Growth) must be greater than 80%for both emergence and vigor")
- Stability of 7 mg CO2-C/g OM/day or below (TMECC 05.08-B "Carbon Dioxide Evolution Rate")
- Carbon to nitrogen ratio (TMECC 05.02A "Carbon to Nitrogen Ratio" which uses 04.01 "Organic Carbon" and 04.02D "Total Nitrogen by Oxidation") of less

© 2023 RH2 Engineering, Inc.

than 25:1. The C:N ratio may be up to 35:1 for plantings composed entirely of Puget Sound Lowland native species and up to 40:1 for coarse compost to be used as a surface mulch (not in a soil mix).

Part 3 – Execution

Implementation Options

The Soil Quality guidelines listed above can be met by using one of the methods listed below:

1. Leave undisturbed native vegetation and soil and protect from compaction during construction.
2. Amend existing site topsoil or subsoil either at default "pre-approved" rates, or at custom calculated rates based on tests of the soil and amendment.
3. Stockpile existing topsoil during grading and replace it prior to planting. Stockpiled topsoil must also be amended if needed to meet the organic matter or depth requirements, either at a default "pre-approved" rate or at a custom calculated rate.
4. Import topsoil mix of sufficient organic content and depth to meet the requirements.

More than one method may be used on different portions of the same site. Soil that already meets the depth and organic matter quality standards, and is not compacted, does not need to be amended.

2.90.10 Topsoil

[32 91 19.20]

Part 2 – Products

Materials

Import topsoil for seeding/planting areas.

Import topsoil shall be naturally occurring surface soil with a maximum sand content of 60 percent. Topsoil shall have no evident rocks or debris over ½-inch Acidity pH range shall be between 5.0 and 6.5. Organic matter content shall be 10 to 20 percent by dry weight. Add dolomite limestone, if required, to obtain pH. Limestone, if used, shall be finely ground, passing a minimum of 90 percent through the U.S. Standard No. 8 sieve and 20 percent through the U.S. Standard No. 100 sieve. Add approved nutrients, if required, to bring nutrients to a satisfactory level for planting as recommended by a qualified testing laboratory (exclude nitrogen, potassium, and phosphorus).

Part 3 – Execution

Installation

In planter areas, soil excavated shall be mixed with organic compost in a ratio of $^{1}/_{3}$ organic compost to $^{2}/_{3}$ sandy loam.

In seeding areas, place topsoil and rake or blade to a smooth, consistent surface. Do not compact. Install 2-inch depth topsoil unless specified otherwise on the plans or within the specific seeding/planting specification section.

© 2023 RH2 Engineering, Inc.

Dispose of excess soil per the Owner's instructions.

2.90.11 Hydroseed

[CSI 32 92 19.16]

Part 1 – General

Related Sections

Division 2.90.21 Erosion Control Matting

Scheduling

Apply hydroseed within the optimum seeding windows whenever possible. Hydroseed may be used for temporary erosion control only with the approval of the Owner. Time construction practices to minimize bare, cleared, and excavated areas so that surfaces are hydroseeded and seed germinates and grows stabilizing surfacing as soon as possible. The optimum seeding windows are April 1 through June 30 and September 1 through October 1. Seeding that occurs between July 1 and August 30 will require irrigation until 75 percent grass cover is established. Seeding that occurs between October 1 and March 30 will require a mulch layer 2-inches thick until 75 percent grass cover is established.

Maintenance

Provide temporary irrigation, mulch or plastic sheeting (plastic sheeting for short term protection only, 7 days maximum) to hydroseeded areas as required for establishment and to protect the seed from construction activities at no additional cost to the Owner.

Part 2 – Products

Materials

Hydroseed applications shall include a minimum of 1,500 pounds per acre of mulch with 3 percent tackifier. Mulch may be made up of 100-percent: cottonseed meal; fibers made of wood, recycled cellulose, hemp, and kenaf; compost; or blends thereof. Tackifier shall be plant-based, such as guar or alpha plantago, or chemical-based such as polyacrylamide or polymers. Mulch or tackifier product used shall be installed per manufacturer's instructions.

Areas that have seed applied by hand shall have a minimum 2-inch thick layer of compost-based mulch or 1-inch layer of topsoil. Slow-release fertilizers shall be used. Fertilizer shall not be agitated more than 20 minutes in the hydromulch machine before it is to be used.

On 2:1 slopes and less, Bonded Fiber Matrix (BFM) or Mechanically Bonded Fiber Matrix (MBFM) products may be used in lieu of erosion control mat. BFM/MBFM products are applied with approximately 10 percent tackifier. BFM/MBFM shall be allowed to cure 24-36 hours before rainfall and shall not be installed on wet or saturated soils.

© 2023 RH2 Engineering, Inc.

Western Washington Hydroseed Mix

Install seed, fertilizer, and mulch for hydroseed mix at the following application rates:

Seed	180 pounds per acre
Fertilizer	90 pounds per acre, 10-4-6 Nitrogen-Phosphorus-Potassium (N-P-K)
Mulch	1,500 pounds per acre
BFM/MBFM	3,000 pounds per acre (for 2:1 slopes and steeper)

Ditch/Pond Seed Mix			
Name	**Proportion by Weight**	**% Purity**	**% Germination**
Tall or Meadow Fescue	75-80%	98%	90%
Seaside/Creeping Bentgrass	10-15%	92%	85%
Redtop Bentgrass	5-10%	90%	80%
All Other Areas Seed Mix			
Name	**Proportion by Weight**	**% Purity**	**% Germination**
Redtop or Oregon Bentgrass	20%	92%	85%
Red fescue	70%	98%	90%
White Dutch Clover	10%	98%	90%

Part 3 – Execution

Preparation

Install 2-inches of import topsoil over areas that will be seeded.

The seedbed should be firm and rough. All soil should be roughened regardless of slope. If compaction is required, slopes must be track walked before seeding. Backblading or smoothing of slopes greater than 4:1 is not permitted if they are to be seeded.

Installation

All disturbed surfaces within the project not otherwise covered by asphalt, gravel, quarry spalls, concrete, or other plant material/landscape items shall be hydroseeded, except ditches and swales may have seed applied by hand. Apply seed prior to installing erosion control blankets.

Field Quality Control

These specifications are the minimum requirements for the anticipated conditions. The Contractor is responsible to ensure seeded areas establish ground cover and to provide any additional measures necessary to establish ground cover in seeded areas. Any seeded areas that fail to establish at least 75-percent cover (100-percent cover for areas that receive sheet or concentrated flows) shall be reseeded at no additional cost to the Owner.

Provide a temporary irrigation system until growth is established if hydroseeding is applied between April 1st and October 1st in Western Washington or Oregon, or for any work at any time in Eastern Washington. Remove temporary irrigation systems when no longer required.

© 2023 RH2 Engineering, Inc.

2.90.21 Erosion Control Matting

[CSI 32 91 16.16]

Part 1 – General

Related Sections

Division 2.90.11 Hydroseed

Submittals

Erosion control matting.

Part 2 – Products

Manufacturers

Erosion control blanket shall be equal to that manufactured by American Excelsior Company, Arlington, Texas or North American Green of Evansville, Indiana.

Materials

Disturbed areas with slopes 3H:1V to 2H:1V shall be equal to American Excelsior Curlex I or North American Green S150.

Disturbed areas with slopes 2H:1V to 1.5H:1V shall be equal to American Excelsior Curlex II or North American Green SC150.

Swales and storm drainage ponds shall be covered with American Excelsior Curlex I, North American Green S150, or equal.

Part 3 – Execution

Preparation

Apply hydroseeding prior to the application of the erosion control matting.

Installation

All areas disturbed during construction with final slopes at 3H:1V or steeper as shown on the plans including swales and storm drainage pond surfaces shall be covered with an erosion control blanket. Blanket shall be installed per the manufacturer's written recommendations including the use of landscape nails as necessary.

2.92.30 Weed Control

[CSI 32 01 90.41]

Part 1 – General

Definitions

Weeds are defined as the common definition. An undesired plant.

Grasses (other than ornamental grasses) growing within planter areas shall also be considered a weed.

© 2023 RH2 Engineering, Inc.

Weed Control means eradication of weeds by mechanical, chemical, or biological means that prevents regrowth for no less than 6 months.

Performance Requirements

Control weeds within the construction limits and any areas disturbed by construction activities.

Submittals

Submit on chemicals or biological processes proposed for weed control.

Scheduling

Intermittent weed control activities should be expected during construction. Final weed control shall occur after final site cleanup and prior to project acceptance.

Part 3 – Execution

Installers

Products used that are not consumer-purchasable at public retail stores may only be applied by an applicator with a Commercial Applicator or Commercial Operator license.

Field Quality Control

The Contractor is responsible for confining weed control products to the site.

© 2023 RH2 Engineering, Inc.

3.00 GENERAL

Sections in these specifications titled "*Common Work for . . .*" apply to all following subsections whether directly referenced or not.

3.05 Common Work for Concrete

[CSI 03 05 00]

Part 1 – General

This division covers that work necessary for furnishing and installing all concrete as described in these specifications and as shown on the Plans.

References

Materials shall conform to the following standards:

- Cement - ASTM C150
- Coarse aggregate - ASTM C33
- Fine aggregate - ASTM C33
- Admixtures - ASTM C494
- Air-entraining admixtures – ASTM C260
- Fly Ash – ASTM C618
- Admixture and products in contact with potable water – NSF 61

Submittals

Submittal information shall be provided to the Owner for the following items:

- Concrete mix design including aggregate gradation and substantiating strength data.
- Admixture Data
- Special placement procedures for hot or cold weather
- Construction Joint Plan
- Concrete anchors
- Concrete anchor installer certification per ACI/CRSI Adhesive Anchor Installer Certification Program.
- Rebar mill certifications
- Rebar placement shop drawings
- Precast concrete items
- Schedule of form inserts
- Grouts

© 2023 RH2 Engineering, Inc.

- Embedded items
- Form ties for liquid containment structures
- Method of plugging through-bolt holes
- Injection Grouting information per Division 3.64

Concrete mix designs shall be submitted to the engineer for approval a minimum of two weeks prior to placing any concrete. The mix design shall include the amounts of cement, fine and coarse aggregate, water and admixtures, as well as the water cement ratio, slump, concrete yield, aggregate gradation, and substantiating strength data in accordance with ACI 318, Chapter 5. A batch plant inspection may be required, the cost of which shall be paid by the Contractor. Review of mix submittals by the engineer of record indicates only that information presented conforms generally with contract documents. Contractor or supplier maintains full responsibility for specified performance.

Part 2 – Products

Components

Nominal maximum size for aggregates is the smallest standard sieve opening through which the entire amount of aggregate is permitted to pass. Provide intermediate aggregate grades as required to achieve a well-graded mix.

All concrete surfaces exposed to weather or standing water shall be air entrained. Total air content shall be in accordance with IBC requirements unless specified otherwise herein. Air shall be measured at the truck, unless otherwise agreed to.

Water used in concrete shall be potable.

Fly ash may be substituted for up to 15 percent of the required cement, except where noted.

Any products that will be applied to the surface of the concrete and will be in contact with potable water must carry NSF 61 certification. Any concrete admixtures used in potable water storage structures must also carry NSF 61 certification.

Mixes

Concrete shall be mixed, conveyed, and proportioned in accordance with IBC section 1905.

The concrete mix shall include the amount of cement, fine and coarse aggregate, including aggregate gradations, water, and admixtures as well as water cement ratio, slump, concrete yield, and sustaining strength data in accordance with these specifications, the requirements of the International Building Code Section 1905, and the requirements of ACI 318.

Finishes

Coat all aluminum in contact with concrete as specified in Division 9.

Part 3 – Execution

Inspection

See Statement of Special Inspections on the Drawings for special inspection requirements. Provide two (2) full working day notice to Owner prior to needing the required inspections.

© 2023 RH2 Engineering, Inc.

Also comply with local building department and permit requirements for inspection and notification.

The Contractor shall repair, replace or modify, as appropriate, any items noted in the Special Inspector's inspection or the building department inspection.

Testing

Concrete strength tests shall be performed per section 1905.6 of the IBC and per the requirements noted herein. The Owner will provide and pay all costs of concrete testing. The Engineer shall be furnished with copies of all inspection reports and test results.

Cylinders used for concrete strength tests shall be 6 by 12. Four by 8 cylinders may be used for mixes with maximum aggregates less than 1-inch, however the testing lab must apply a 0.94 multiplier to the compressive strength test results unless data acceptable to the Engineer is presented that would justify a higher multiplier. All mixes utilizing aggregates over 1 inch shall be tested using 6 by 12 cylinders.

When 4 by 8 cylinders are utilized AASHTO T23 requirements shall be followed, and the retainer used with neoprene pads when testing for compressive strength shall be constructed according to ASTM C1231.

The Contractor will coordinate all concrete testing with the testing agency. Costs will be paid by the Owner.

Give the Owner and testing agency 48-hour notice prior to concrete placement. If Contractor fails to provide the required notice, the Owner may elect to cancel the affected concrete placement. Contractor shall be responsible for costs and delays due to improper notification.

If the Contractor schedules a concrete placement and does not notify the Owner and testing agency of a cancellation within 24 hours of the scheduled placement, the Contractor shall pay the testing agency costs for an unnecessary trip. If the Contractor fails to provide the testing agency with adequate notification and testing agency cannot attend concrete placement, Contractor shall reschedule placement. Contractor shall be responsible for all associated delays.

The Contractor shall provide all assistance and cooperation necessary to testing personnel to obtain the required concrete tests. Contractor and Owner will have access to testing results as soon as they are available.

The testing agency shall take a minimum of four samples for every 50 yards of concrete placed (and a minimum of four per pour); one for a 7-day test, two for 28-day tests, and one for backup testing in case the other two samples do not meet design strength. Additional samples may be taken to verify strength prior to form removal at the Contractor's expense.

3.06 Maintenance of Concrete

[CSI 03 01 00]

© 2023 RH2 Engineering, Inc.

3.06.30.71 Resurfacing of Cast-in-Place Concrete

[CSI 03 01 30.61]

Part 1 – General

This division covers that work necessary for repairing spalled and damaged concrete. Repair any areas with deterioration exceeding ½-inch, where rebar is exposed or where directed by the Owner.

Part 2 – Products

Materials

CONCRETE REPAIR MATERIAL: SikaTop 111 PLUS or equal cement-based repair mortar. Mortar shall be ANSI/NSF Standard 61 approved if in contact with potable water and contain a corrosion inhibitor. See Manufacturer's Literature for primer and auxiliary products appropriate for use with the repair material.

SILANE SEALER shall be alcohol based, 95 percent silane. No fillers, sterates or paraffins are allowed. Use DUR A PELL 100 as manufactured by Chemprobe Coating Systems or equal.

Part 3 – Execution

Preparation

The Contractor shall be familiar with the product and methods and be prepared to discuss the repair procedure at the Preconstruction Meeting.

High pressure power-wash the exposed structure to remove all loose, delaminated concrete to sound concrete.

Surface Preparation: Remove loose, delaminated concrete to sound concrete. Where corrosion of the reinforcement exists, continue bulk removal along the reinforcing steel and adjacent areas with evidence of corrosion-induced damage Under-cut all exposed reinforcing steel by a minimum of ¾-inch. The shape of the prepared cavity should be square or rectangular in shape. The edges of the patches shall be saw-cut perpendicular to the surface to a minimum depth of ½-inch. Repair area shall be a minimum of ½-inch deep throughout. Use abrasive blasting to remove residual dust, debris, fractured concrete, and contaminants that prevent proper bonding. Following abrasive blasting, blow out repair areas with oil-free compressed air. The final surface texture should be rough with minimum ⅛-inch amplitude.

Treatment of exposed reinforcement: All signs of corrosion should be removed from exposed reinforcing steel by an abrasive blasting, wire wheel or needle scaler. If the cross-sectional area of the reinforcing steel has been significantly reduced, the engineer should be consulted. Prime reinforcing as recommended by the repair material manufacturer.

Installation

Surface Saturation: Saturate surface with potable water. The base concrete shall be in a saturated surface dry (SSD) condition prior to application of repair material to prevent a rapid loss of moisture from the repair material and into the substrate.

© 2023 RH2 Engineering, Inc.

Mixing and Application of Repair Material: Mixing and application shall be in strict accordance with the manufacturer's instructions. Apply the material with adequate pressure before the bond coat dries. Thoroughly consolidate the repair material into the corners of the patch and around any exposed reinforcement in the repair zone. If a second lift is required, thoroughly roughen the surface of the first lift by scoring the soft mortar to achieve an aggressive finish, similar in profile to the prepared concrete substrate. If the second lift will not be immediately applied, keep the first lift moist until application of the second lift. Finish to match existing surface. Cure using curing compound.

Apply silane sealer as specified to exposed surfaces and edges of roof slab.

3.10 FORMING AND ACCESSORIES

[CSI 03 10 00]

3.11 Formwork

[CSI 03 11 00]

3.11.13 Structural Cast in Place Forming

[CSI 03 11 13]

Part 1 – General

The Contractor shall submit a construction joint plan to the Engineer for review prior to formwork and rebar installation if altered from that shown on the Plans. Modifications to the construction joints shall be submitted to the Engineer no less than 7 working days prior to placing the forms and rebar.

Part 2 – Products

Materials

Unless otherwise directed, coat contact surface of forms with colorless, non-staining, mineral oil that is free from kerosene, or other approved suitable material, to permit satisfactory removal of forms without concrete damage. Form-release agent for interior of potable water storage structures shall be National Sanitation Foundation Standard (NSF) No. 61 approved for use in direct contact with potable water.

Form construction for surfaces covered with backfill shall be made of steel, plywood, or dressed, matched lumber. Form construction for exposed surfaces shall be made of new plywood or steel without surface markings.

Form ties for use in liquid containment structures shall be standard plastic cone snap-ties with ¾-inch diameter neoprene waterstop washer or removable taper ties. Use Greenstreak X-plugs with removable taper ties or equal. Contractor shall submit to the Engineer form ties to be used for review prior to installation.

© 2023 RH2 Engineering, Inc.

Part 3 – Execution

Installation/Construction

Concrete forms shall be sufficiently tight to prevent leakage of concrete or mortar and shall be properly braced or tied together to maintain desired position and shape until removed.

Conduits, pipes and sleeves of any material not harmful to concrete and within the limitations of ACI 318, Section 6.3 are permitted to be embedded in concrete with approval of the Engineer. Provide a ¾-inch chamfer or radius at all exposed corners and edges, unless specifically stated otherwise on the Plans.

Forms shall remain in place until the concrete has developed sufficient strength to withstand imposed loads without damage or deflection. Wall and slab forms shall remain in place for a minimum of 24 hours after completion of the pour. Forms for beams and suspended slabs shall remain in place for a minimum of 14 days AND until concrete has developed 28-day design strength, unless approved by the Engineer. The Contractor shall coordinate with the testing lab to verify concrete strength prior to form removal.

Do not allow water to flow through areas where forms are to be placed. During form construction and prior to placement of concrete, keep footings and floor slab areas free of standing water.

Field Quality Control

Variations from plumb, specified grade, conspicuous lines, and walls shall not exceed plus or minus ¼-inch in any 10-foot length, and shall not exceed one inch over the entire length. Variations from dimensions shall not exceed plus or minus ½-inch. Closer tolerances shall be achieved by the Contractor as necessary to accommodate equipment and other permanent materials.

3.15 Concrete Accessories

[CSI 03 15 00]

3.15.13 Non-Expanding Waterstops

[CSI 03 15 13.13]

Part 2 – Products

Materials

Waterstop shall be constructed of polyvinylchloride; Greenstreak 705 for 6-inch waterstops and Greenstreak 709 for 9-inch waterstops, or equal. Split waterstops shall be Greenstreak 724 for 6-inch and Greenstreak 653 for 9-inch.

Waterstop width shall be as shown on the Plans. If not shown, use 6-inch minimum.

Fabrication

Field welding of thermoplastic waterstop shall be performed by indirect application of heat to the ends of the material with thermostatically controlled Teflon-covered welding irons. Crosses, tees and any other construction joints meeting at an angle shall have waterstop

© 2023 RH2 Engineering, Inc.

joints welded by the manufacturer with bulbs meeting. Field welding is permitted only when butt welding (end to end) straight pieces of the waterstop. If the Contractor would like to field weld joints, samples of all shown or proposed field welded joints shall be submitted. If field joints do not match the approved joints in quality as determined by the Engineer, manufactured joints shall be substituted.

Part 3 – Execution

Installation

Waterstops shall be placed at all cold joints and expansion joints that may be hydrostatically pressurized including construction joints located below proposed grade of the structure (except for stem wall footings). The Contractor shall provide waterstops at all construction joints that the Contractor creates as well as construction joints shown on the design Plans.

The waterstop shall be placed continuously along the joint and shall be detailed through abutting joints to provide a continuous seal. Concrete forms shall be constructed such that the waterstop is not bent or folded during concrete placement. Split waterstops may be used where flat waterstops are not possible or practical.

One-half of the width of the waterstop shall be positioned in the first pour of concrete prior to concrete placement. The uncast half of the waterstop shall be securely held in position to prevent folding, lay down, or damage from placement of concrete during the following placement of concrete. The concrete shall be thoroughly vibrated around the waterstop to completely cover the surfaces embedded and prevent the formation of voids. The waterstop shall be held in position during the initial curing of the concrete to prevent movement of the waterstop from the required position.

3.15.14 Expanding Waterstops

[CSI 03 15 13.16]

Part 2 – Products

Materials

Bentonite Waterstop shall be Volclay WATERSTOP-RX 101, or equal. Use Bentonite Waterstop only where specifically called out on the Plans. Bentonite Waterstop shall be a 1-inch by ¾-inch flexible strip consisting of 75 percent sodium bentonite and 25 percent butyl rubber compound. Adhesive shall be as recommended by the waterstop supplier.

Part 3 – Execution

Preparation

Concrete to receive waterstop shall be sound with a smooth finish, free of debris, oil, grease, or other foreign material. Installation shall not proceed when work areas are flooded to the extent that would cause waterstop to hydrate; nor when precipitation can be reasonably anticipated before waterstop can be properly installed or protected. All applicable vertical and horizontal construction pour joints to receive waterstops must be encapsulated with a minimum of three (3) inches of concrete on all sides.

© 2023 RH2 Engineering, Inc.

Installation

Components and installation procedures for Bentonite Waterstop shall be in accordance with manufacturer's printed specifications and recommendations. Install as follows:

1. Clean all debris, dirt and rocks from dry concrete surface.
2. Concrete to be free of large voids and projections.
3. Maintain minimum of 3 inches of clearance to edge of concrete.
4. Apply adhesive per manufacturer's instructions.
5. Remove release paper. Press the entire length of waterstop firmly against primed surface. Verify minimum concrete coverage will be maintained over entire placement of waterstop. Place in maximum practicable lengths to minimize coil end joints.
6. Tightly butt coil ends together to form continuous waterstop. DO NOT OVERLAP COIL ENDS. Where required cut coils with sharp knife or utility blade to fit coil ends together without overlapping.
7. Pour and vibrate concrete. Whenever possible do not pour concrete directly.

3.15.02 Premolded Joint Filler

[CSI 03 15 30 or 07 91 26]

Part 1 – General

References

Premolded joint filler for expansion or through joint applications shall conform to the specifications for "Preformed Expansion Joint Fillers for Concrete Paving and Structural Construction", AASHTO M 213, except the requirement for water absorption is not applicable.

Part 2 – Products

Materials

The thickness and width of premolded joint filler shall be as indicated on the Plans. Where no premolded filler thickness is indicated, the thickness shall be ¾-inch.

3.15.03 Expansion Joints

[CSI 03 15 32]

Part 2 – Products

Materials

Expansion Joint Dowels shall be epoxy-coated plain steel bars of the dimensions as shown on the Plans and shall meet the requirements of Section 9-07.5 of the Standard Specifications.

Joint Sealant shall be Sololastic Ultra by as manufactured by Master Builders Technology and as provided by Degussa Construction Chemicals, or equal. Color to match concrete. Surface

© 2023 RH2 Engineering, Inc.

preparation and prime for water immersion shall be as recommended by the manufacturer. Provide backer rod as recommended by the sealant manufacturer.

The ends of the dowel bars embedded in the expansion side of the joint shall be coated with a parting compound such as grease, or other approved parting compound prior to concrete placement.

3.15.05 Pipe Penetrations through Concrete

[CSI 03 15 35]

Part 1 – General

Summary

Water holding structures and structures buried and subject to groundwater contact: As shown on the Plans.

Structures not holding water or unburied structures: Unless identified on the Plans, all pipes larger than two inches passing through poured-in-place concrete floors and walls shall be isolated from the concrete.

Part 2 – Products

Materials

Provide a Link-Seal system (or approved equal).

Part 3 – Execution

Examination

Wrapping must be inspected and approved by Engineer prior to concrete pour. Gaps, tears, or looseness in wrapping will be cause for rejection.

Installation

Install Link-Seal per manufacturers instruction either within a cast-in-place sleeve or core drill a clean hole.

3.15.19 Concrete Anchors

[CSI 03 15 19 (cast-in) or 05 05 19 (drilled)]

Part 1 – General

Quality Assurance

Installation of adhesive anchors shall be performed by personnel certified in accordance with the ACI/CRSI Adhesive Anchor Installer Certification Program. In lieu of certification the installer shall attend on-site training held by the adhesive manufacturer prior to the installation of adhesive anchors.

© 2023 RH2 Engineering, Inc.

Part 2 – Products

Materials

Concrete Anchors shall be Hilti HIT 500-V3, Simpson SET-XP, or Powers PE1000+ Adhesive Anchors.

CMU Anchors shall be Simpson SET-XP Adhesive Anchors.

Anchorage into non-grouted, hollow masonry cells is not allowed unless specifically called out on plans. Where allowed, anchors in unreinforced masonry cells shall be Simpson SET-XP epoxy adhesive in conjunction with the Simpson Optimesh screen.

Threaded rod shall be stainless steel except in dry locations.

For wall mounted equipment weighing less than 250 pounds in grouted or non-grouted CMU cells, Simpson Titen-HD Screw Anchors may be used. Screw anchors may not be used for securing items subject to cyclic loads, such as walking surfaces or machinery.

Part 3 – Execution

Installation

Install in accordance with Manufacturer's recommendations. Special Inspection in accordance with IBC, Section 17, must be provided. Provide a minimum of 48 hours' notice to Engineer prior to starting installation. Concrete anchors shall not be used to resist tension or fatigue loading without Owner's evaluation and approval.

Use threaded rod or reinforcing bar as shown on the drawing, and meeting Manufacturer's recommendations. Provide minimum embedment as shown. Holes shall be drilled with carbide-tipped drill bit. Holes shall be cleaned of dust and debris. Adhesive shall be inserted with a mixing nozzle.

3.20 REINFORCING

[CSI 03 20 00]

3.21 Reinforcement Bars

[CSI 03 21 00]

3.21.11 Plain Steel Reinforcement Bars

[CSI 03 21 11]

Part 1 – General

References

ACI – American Concrete Institute- latest edition

CRSI Manual of Standard Practice – latest edition

© 2023 RH2 Engineering, Inc.

Part 2 – Products

Materials

Grade – ASTM A706, Grade 60

ASTM A615, Grade 60 shall be permitted if:

(a) The actual yield strength based on mill tests does not exceed fy by more than 18,000 psi; and,

(b) The ratio of actual tensile strength to the actual yield strength is not less than 1.25.

Detailing - ACI 318 and ACI 315

Lap requirements - See schedule on Plans or as required by ACI 318

Tie wire - 16 gauge minimum

Bar supports shall conform to "Bar Support Specification" CRSI Manual of Standard Practice, MSP-1-80. Provide Class 1, plastic protected bar supports. Use pre-cast concrete blocks to support bars off ground. Bar supports in water holding and buried structures shall be non-metallic.

Bar supports for the bottom rebar mat of suspended slabs or beams in water holding structures must be point supports (chairs or dobbies), not continuous.

Part 3 – Execution

Installation

Reinforcing steel shall be detailed in accordance with ACI 315and 318 and as shown on the Plans. Lap all reinforcements in accordance with "the reinforcing splice and development length schedule". Provide corner bars at all wall and footing intersections. Bend wire bar ties away from formwork to provide the same concrete clearance as shown on the Plans to the bars.

Welding of reinforcing steel shall not be performed unless specifically approved by the Engineer. If approved, Contractor will arrange and pay for all required Special Inspections associated with welding of reinforcing steel.

Field Quality Control

Reinforcing steel shall be free of rust and loose scale at time of concrete placement. Bars with kinks, improper bends, or reduced cross-section due to any cause will not be used. Bars shall not be field bent. Bars may not be tack-welded or otherwise heated.

If, within the project warranty period, rust spots appear on the concrete due to failure to achieve proper clearance on the rebar or wire ties, the Contractor shall grind out and patch the areas using a method satisfactory to the engineer.

© 2023 RH2 Engineering, Inc.

3.22.13 Galvanized Welded Wire Fabric Reinforcement

[CSI 03 22 13]

Part 1 – General

Design Requirements

Hook dimensions and diameters of bends shall be in accordance with the ACI 318.

Fabrication tolerances shall be in accordance with the requirements of ACI 318.

Welded wire reinforcement (WWR) shall conform to the latest edition of ASTM A185 or A497. Galvanizing shall conform with ASTM A 641/A 641M, for cold-worked wire, or ASTM A123, for hot-dipped galvanizing of welded wire sheets/mats.

Plastic or wire bar supports, such as chairs and bolsters, shall conform to industry practice as described in the WRI "WWR-500, Manual of Standard Practice" or "TF 702 – Supporting WWR".

Part 2 – Products

Components

For galvanized reinforcing, tie wires and metal clips shall be plastic coated or galvanized.

Part 3 – Execution

Preparation

Wire reinforcement shipped in rolls shall be straightened into flat sheets before being placed.

Construction

Reinforcement shall be cut and bent to the shapes shown on the Plans. All reinforcement shall be cold bent, unless otherwise permitted by the Engineer. Reinforcement partially embedded in concrete shall not be field bent, except as shown on the Plans or permitted by the Engineer.

Steel reinforcement shall be accurately placed as shown on the Plans and firmly held in positions during the placing and finishing of concrete. Reinforcement shall be lapped and tied around the perimeter of each sheet in order to maintain the proper positioning of the reinforcement. Lap splices shall have a minimum of two ties per spliced length. With the exception of tie down bars, welding (tack welding) will not be permitted.

Reinforcement shall be supported in its specified and proper position by use of precast blocks, plastic or wire/ bar supports, supplementary bars, side form spacers or other approved devices. Such devices shall be sufficiently strong and properly placed at frequent intervals so as to maintain the cover between the reinforcing and the surface of the concrete during concrete placement.

© 2023 RH2 Engineering, Inc.

3.30 CAST-IN-PLACE CONCRETE

[CSI 03 30 00]

3.30.05 Common Work for Cast in Place Concrete

[CSI 03 30 05]

Part 1 – General

Scheduling

Contractor shall schedule and attend a Concrete Placement meeting at least one week prior to placing concrete. The following shall attend:

- Owner
- Engineer
- Contractor
- Testing Laboratory Representative
- Concrete Supplier

The following shall be discussed at the meeting:

- Safety (Contractor's sole responsibility)
- Batching and Delivery, Adjustments to Mix; Site Dosing
- Placement Rates and Anticipated Schedule of Placing and Finishing
- Site Layout –Holding Area; Pump Truck Location; Truck Wash-out Area; Parking area
- Equipment – Pumps and Appurtenances; Vibrators; Spare Equipment
- Concrete Testing Procedures
- Curing

Delivery

Concrete shall be transported in a truck mixer to the jobsite and discharged within 1.5 hours after cement has been added to water or aggregates. Rejected concrete will be at Contractor's expense.

Part 2 – Products

Components

If allowed, curing materials shall conform to ASTM C171 and liquid membrane-forming compounds shall conform to ASTM C309. When concrete is to be coated or stained, use UV-dissipating form release and curing compounds.

© 2023 RH2 Engineering, Inc.

Part 3 – Execution

Preparation

Do not place concrete during rain, sleet, or snow until water and freezing protection is provided.

Position embedded items accurately, and support against displacement or movement during placement.

Fill voids in sleeves, insets, anchor slots, etc., temporarily with readily removable materials to prevent entry of concrete into voids.

Before beginning placement of concrete, remove hardened concrete and foreign materials from inner surface of mixing and conveying equipment. Before depositing concrete, remove debris from space to be occupied by the concrete. Secure reinforcement in position to prevent movement during concrete placement.

At the beginning of the concrete pour for walls taller than 8 feet, place a 1½ to 2½-inch thick grout pad prior to placing the concrete for the wall. Grout mix shall consist of fine aggregates, concrete and water in the same ratios as used in the wall concrete. The placement of the concrete shall proceed immediately after the grout placement so as to prevent any cold joints.

At construction joints, thoroughly clean surface of existing concrete to remove laitance. Roughen existing concrete surface to expose aggregate uniformly and apply approved bonding agent to existing concrete in accordance with manufacturer's recommendations. Prior to placing fresh concrete, dampen joint and coat with grout mixture in accordance with ACI 301, Section 8.5.

Installation

Placement shall be in accordance with IBC, Section 1905.

Place no concrete when air temperature is below or expected to be below 40 degrees during the 28-day curing period unless a low temperature concrete mix has been approved by the Owner. Provide adequate equipment for heating materials and protecting concrete during freezing or near freezing weather. Keep materials, reinforcement, forms, and ground in contact with concrete free from frost at time of placement. Heat mixing water as required. Use no materials containing ice.

Place no concrete when air temperature exceeds or is expected to exceed 85 degrees during the 28-day curing period unless a high temperature placement plan has been approved, and unless adequate precautions are taken to protect work. Cool ingredients prior to mixing. Flake ice or crushed ice of a size that will melt completely during mixing may be substituted for all or part of water. Cool forms and reinforcing prior to placing concrete.

Handle concrete from mixer, ready-mixed truck, or from transporting vehicle to place of final deposit by methods which prevent separation or loss of ingredients. Under no circumstances shall concrete that has partially hardened be deposited.

Place concrete in maximum lifts of 3 feet. Deposit concrete continuously so that no concrete will be deposited on concrete which has hardened sufficiently to cause formation of seams

© 2023 RH2 Engineering, Inc.

and planes of weakness within the section. If a section cannot be placed continuously, locate and reinforce construction joints at points as provided for in the Plans or as approved by the Owner. Maximum concrete drop shall be 5 feet.

Consolidate concrete by vibration, supplemented by hand spading, rodding, forking, or tamping. Thoroughly work concrete around reinforcement, around embedded items, and into corners of forms to eliminate air or rock pockets which may cause honeycombing, pitting, or planes of weakness. Insert and withdraw internal vibrators at points approximately 18 inches in each direction and extend into the lower concrete lifts. At each insertion, the duration shall be sufficient to consolidate the concrete; but not sufficient to cause segregation. Do not use vibrators to transport concrete within forms. Consolidate slabs by utilizing vibrating screeds, roller pipe screeds, internal vibrators, or other approved methods. Have a spare vibrator available at jobsite during concrete placing operations.

After removal of forms, cut out and patch defects in concrete surfaces. Remove form tie cones. Cut or snap off form ties to a depth of ¾-inch. Chip out rock pockets, holes from form tie removal, and other defects to solid concrete. Repair defects in accordance with 3.01.30.71.

Curing

See section 3.39.

3.31 Structural Concrete

[CSI 03 31 13]

Part 1 – General

Summary

All concrete as shown on the Plans not used for liquid containment and below-grade structures and not called out otherwise. Use water reducers as required to achieve slump. Hydraulic Concrete may be substituted.

.

Performance Requirements

28-day compressive strength – 4,500 psi minimum

Slump - Without plasticizers; 4 inches for floor and roof slabs, 7 inches for walls. With plasticizers, maximum 9 inches or as desired for placement.

Part 2 – Products

Mixes

Water/cement ratio - 0.40 maximum

Nominal maximum aggregate size – ¾-inch (AASHTO Grading No. 67)

Entrained air ratio –5 percent minimum to 6.5 percent maximum

© 2023 RH2 Engineering, Inc.

3.31.30 Thrust Blocks, Driveways, Curb, Gutter, Sidewalks, Equipment Pads, and Fence Posts

[CSI 03 31 13.10]

Part 1 – General

Summary

All concrete for non-structural applications including thrust blocks, driveways, sidewalks, equipment pads, and fence post foundations. Hydraulic or Structural Concrete may be substituted.

Performance Requirements

28-day compressive strength – 4,500 psi minimum

Part 2 – Products

Mixes

Water/cement ratio - 0.45 maximum

Nominal maximum aggregate size – ¾-inch (AASHTO Grading No. 67)

Entrained air ratio – 3.5 percent minimum to 6.5 percent maximum

3.31.32 Hydraulic Concrete

[CSI 03 31 13.12]

Part 1 – General

Summary

All concrete as shown on the Plans for liquid containment and below-grade structures except stem walls. Use water reducers for all concrete. Use super-plasticizers to achieve required slump.

Performance Requirements

28-day compressive strength – 4500 psi minimum

Slump – Without plasticizers; 4 inches for floor and roof slabs, 7 inches for walls. With plasticizers, maximum 9 inches and as desired for placement.

Part 2 – Products

Mixes

Water/cement ratio - 0.38 maximum

Nominal maximum aggregate size – 1½-inch

Combined Grading Limits: Limits shown are for all course and all sand mixed together, (combined).

© 2023 RH2 Engineering, Inc.

Sieve Sizes	Combined Grading Limits
	1½" Max.
2"	-100
1½"	95 - 100
1"	65 - 85
3/4"	55 -75
1/2"	-
3/8"	40 - 55
No. 4	30 - 45
No. 8	23 - 38
No. 16	16 - 30
No. 30	10 - 20
No. 50	4 - 10
No. 100	0 - 3
No. 200	0 - 2

Entrained air ratio – 3.0 percent minimum to 6.0 percent maximum.

3.34 Low Density Concrete

[CSI 03 34 00]

3.34.16 Concrete Fill

[CSI 03 34 16]

Part 1 – General

Summary

Use for all concrete shown on the Plans as Concrete Fill. Use water reducers as required for flowability.

Performance Requirements

Slump –as required for placement.

28-day compressive strength – 2,500 psi minimum

Part 2 – Products

Mixes

Water/cement ratio - 0.50 maximum

Nominal maximum aggregate size – ⅜-inch

Entrained air ratio – 5.0 percent minimum to 8.0 percent maximum

3.35 Concrete Finishing

[CSI 03 35 00]

© 2023 RH2 Engineering, Inc.

3.35.05 Common Work for Surface Finishing

[CSI 03 35 05]

Part 2 – Products

Finishes

Each concrete area that requires finishing shall conform to one of the following requirements:

- Foundation (exterior) - Ordinary Wall
- Foundation (interior) - Ordinary Wall
- Interior Floors - Floated
- Exterior Walls - Ordinary Wall
- Equipment Pads - Sacked Wall
- Interior Roofs - Ordinary Wall
- Exterior Roofs - Ordinary Wall

Part 3 – Execution

Preparation

Do not place concrete which requires finishing until the materials, tools, and labor necessary for finishing the wet concrete are on the job and acceptable to the Owner. If rainfall is possible, tent the work area prior to the pour and maintain protection until the concrete is cured sufficiently to resist damage.

3.35.50 Ordinary Wall Finish

[CSI 03 35 50]

Part 2 – Products

Materials

Ordinary Wall Finish requires the use of like-new forms and linings that will produce a uniform surface.

Part 3 – Execution

Construction

After points have set sufficiently, grind or fill form marks and pointings to give a smooth surface even with flat wall surface. Fill all holes greater than ¼-inch with 1:2 mortar floated to an even, uniform finish.

© 2023 RH2 Engineering, Inc.

3.35.54 Floated Finish

[CSI 03 35 54]

Part 3 – Execution

Construction

Consolidate, strike off, and level concrete; but do not work further until ready for floating. Begin floating when water sheen has disappeared and surface has stiffened sufficiently to permit floating operations. Consolidate surface with power-driven floats. Hand floating may be used if area is small or inaccessible to power units.

Field Quality Control

Check surface planeness during or after first floating. Cut down high spots and fill low spots to produce surface with tolerance of ¼-inch in 10 feet in any direction. Refloat to a uniform, smooth, sandy texture immediately after leveling.

3.35.56 Light Brush Finish

[CSI 03 35 56]

Part 2 – Products

Finish

When concrete has appropriately set, finish with light soft broom finish. Brush perpendicular to slab slope.

Part 3 – Execution

Construction

Consolidate, strike off, and level concrete; but do not work further until ready for floating. Begin floating when water sheen has disappeared and surface has stiffened sufficiently to permit floating operations. Consolidate surface with power-driven floats. Hand floating may be used if area is small or inaccessible to power units.

Field Quality Control

Check surface planeness during or after first floating. Cut down high spots and fill low spots to produce surface with tolerance of ¼-inch in 10 feet in any direction. Re-float to a uniform, smooth, sweat finish concrete.

3.35.58 Sacked Wall Finish

[CSI 03 35 58]

Part 1 – General

References

Provide sacked finish in accordance with Section 6-02.3(14)A of Standard Specifications.

© 2023 RH2 Engineering, Inc.

3.39 Concrete Curing

[CSI 03 39 00]

Part 2 – Products

Materials

Curing compounds are not permitted on surfaces that will receive coatings.

Part 3 – Execution

Installation

All concrete for structures, sidewalks, drives, curbs, shotcrete (see section 3.37), and where directed by the Owner, shall be water-cured in accordance with ACI 308.1 unless approved in advance by the Owner. If allowed, curing compound shall be applied immediately after finishing or form removal. When plastic or burlap covers are used to augment or protect curing, extend sheeting beyond the edges of the concrete and secure against wind lift. Inspect and adjust curing systems daily, including over weekends and holidays.

Water holding structure floors and bases to be cured by water flooding. Where a continuous waterstop is installed around the perimeter, fill up against the waterstop. Where a waterstop is not part of the final product or is not tall enough, provide temporary barriers. Outside the waterstop, water cure using soaker hoses and plastic or burlap covers. Use of curing compounds outside the water stop may only occur with the approval of the Owner, approval should not be assumed.

Concrete structures that require differential backfill as shown on the Plans or as required for construction shall cure for a minimum of the following prior to placing backfill:

- Backfill equal or greater than 24 inches: 7 days AND 28-day strength requirements.
- Backfill between 6 and 24 inches: 3 days AND 80-percent of the 28-day strength requirements.

Curing compound shall be sprayed on the concrete surface in a uniform manner and according the manufacturer's recommendations immediately after the concrete has reached sufficient strength to support a person's weight without creating a visible footprint.

3.40 PRE-CAST CONCRETE

[CSI 03 40 00]

3.48 Pre-Cast Concrete Specialties

[CSI 03 48 00]

© 2023 RH2 Engineering, Inc.

3.48.50 Utility Structures

[CSI 03 48 50, 33 05 61, 33 05 63]

Part 1 – General

Related Divisions

- 13.39.13 Sanitary Sewer Manholes, Frames, and Covers

Design Requirements

All concrete structures identified on the Plans as being pre-cast, prefabricated, or not specifically detailed with reinforcing steel shall be pre-cast concrete.

Pre-cast vaults shall conform to ACI 318 and be constructed to the equivalent dimensions and functional characteristics of the specific product identified on the Plans.

Unless shown otherwise on the plans, round structures larger than 30-inch inside diameter, or rectangular structures with longest interior side 30-inches or longer, that utilize riser sections, shall be cast with an integral keyway for interlocking the riser sections.

Performance Requirements

Pre-cast structures shall be constructed to withstand anticipated construction loads that occur during transport, handling, and placement as well as the anticipated design loads. Design loads shall include the anticipated soil pressures, hydrostatic loads, and HL-93 traffic loading.

Part 2 – Products

Materials

Additional reinforcement shall be provided within the pre-cast concrete structure at all penetrations, openings, joints, and connections. The additional reinforcement shall be provided to prevent damage during shipping, handling and installation. All damaged units shall be rejected.

All precast structures that consist of sections (base, riser, lid, etc.) shall have the joints sealed with rubber gaskets or mastic, of a material appropriate for the installation.

Part 3 – Execution

Cleaning

Fill picking holes with grout flush to the structure surface, including those in vault lids. Cut, remove, and grind smooth shipping lifting hooks on the vault interior, unless directed otherwise by the Engineer.

© 2023 RH2 Engineering, Inc.

3.48.52 Precast Gravity or Thrust Blocks

[CSI 03 48 52]

Part 1 – General

Design Requirements

Concrete for precast gravity and precast thrust blocks shall be 4,000 psi minimum strength. Concrete must be cured 28 days prior to applying any load or thrust.

Part 2 – Products

Materials

Unless specified otherwise, precast concrete gravity blocks shall be "Ecology Block" style with interlocking tongue and groove on top and side. 2 feet wide by 2 feet tall. 4 foot or 6-foot length as shown on the plans or directed by the Engineer. Minimum block weight of 600 pounds per foot of length.

Precast thrust blocks may be "Ecology Blocks" or custom reinforced concrete blocks provided they meet the minimum bearing area specified in the plans or the standard construction details. Custom reinforced blocks must meet the following minimum criteria:

- 36 inches or less per side: 9-inch minimum thickness. (5) #6 rebar @ 6-inch OC EW.
- 36 to 48 inches per side: 10-inch minimum thickness. (7) #6 rebar @ 6-inch OC EW.
- 48 to 72 inches per side: 12-inch minimum thickness. (9) #6 rebar @ 6-inch OC EW.

3.60 GROUTING

[CSI 03 60 00]

3.62 Non-Shrink Grouting

[CSI 03 62 00]

3.62.13 Non-Metallic Non-Shrink Grout

[CSI 03 62 13]

Part 1 – General

Summary

Use Precision Non-Shrink Grout for grouting all equipment base plates, pipe supports, and base plates for metalwork. Precision Non-Shrink grout may also be used for all other non-shrink grouting operations. General Purpose Non-Shrink grout may be used for any applications other than those noted for Precision Non-shrink Grout. Non-shrink grout shall be used to seal all new pipe and conduit penetrations (watertight) into and out of all concrete and CMU block walled structures.

© 2023 RH2 Engineering, Inc.

Storage and Handling

Stockpile grout to prevent contamination from foreign materials and store admixtures to prevent contamination or damage from excess temperature change

Part 2 – Products

Materials

Precision Non-Shrink Grout:

Provide a high-precision, fluid, non-shrink, quartz or non-catalyzed metallic aggregate grouting material. Provide a ready-to-use grout that hardens free from bleeding, settlement, or drying shrinkage when mixed, placed and cured at any consistency – fluid, flowable, plastic or damp-pack.

Provide precision, non-shrink natural aggregate grout that when cured produces the following properties:

A. Compressive Strength at fluid consistency (ASTM C109-Modified): 3500 psi (24 MPa) at 1 day, 7500 psi (52 MPa) at 28 days.

B. Passes ASTM C1107 as a grade B grout when tested as temperature minimum and maximums of 45 degrees Fahrenheit to 90 degrees Fahrenheit (8 degrees Celsius to 32 degrees Celsius) at a working time of 30 minutes. Grout must be tested at a fluid consistency per ASTM C939 and remain fluid at temperature range minimum and maximums for the 30-minute working time. All materials including water must be mixed and tested at temperature minimum/maximums.

C. Modulus of Elasticity at 28 days at fluid consistency (ASTM C469): 3.0×10^6 psi (20.7 GPa) minimum, 3.9×10^6 (27.0 GPa) maximum.

D. Coefficient of Thermal Expansion for fluid consistency (ASTM C531): 7.5×10^{-6}/ degrees Fahrenheit maximum (13.5×10^{-6}/ degrees Celsius).

E. Flexural strength at 28 days for fluid consistency (ASTM C78): 1300 psi (7.9 MPa).

F. Resistance to rapid freezing – thawing (ASTM C666, Procedure A): 300 cycles- min RDF 90 percent.

G. Split tensile strength at 28 days at fluid consistency (ASTM C496): 450 psi (3.1 MPa).

H. Pass 24-hour grout test under stated temperature, time and fluidity constraints. See MBT Protection and Repair 24-hour Grout Form.

Precision non-shrink grout shall be MasterFlow 928 or 885 Grout or approved equal.

General Purpose Non-Shrink Grout:

General Purpose Non-shrink grout shall meet the compressive strength and nonshrink requirements of CRD-C 621, Grades B and C; Corp of Engineers Specification for Non-shrink grout; and ASTM C1107, Grades B and C. General Purpose Non-shrink grout shall be MasterFlow 713, Dayton Superior 1107 Advantage, or approved equal.

Provide curing compounds as recommended by the grout manufacturer.

Water to be used in mixing the grout shall be potable.

© 2023 RH2 Engineering, Inc.

Mixes

Comply with grout manufacturer's recommendations for mixing procedures.

Adjust water temperature to keep mixed grout temperature in the range of 45 degrees Fahrenheit (7 degrees Celsius) and 90 degrees Fahrenheit (32 degrees Celsius) minimum/maximum.

Use cold or iced water to extend working time in hot weather or in large placements.

Use warm water in cold conditions to achieve minimum as mixed temperatures.

Part 3 – Installation

Preparation

Mechanically remove unsound concrete within the limits of the grout placement.

Remove at least ¼-inch (6mm) of existing concrete facing and continue removal as required to expose sound aggregate.

Thoroughly clean the roughened surface of dirt, loose chips, and dust. Maintain substrate in a saturated condition for 24 hours prior to grouting. Surface should be saturated surface dry at time of grouting.

Clean baseplates and other metal surfaces to be grouted to obtain maximum adhesion. Remove loose rust and scale by grinding or sanding.

Comply with grout manufacturer's recommendations for form construction. Construct forms to be liquid tight.

Installation

Place grout mixture into prepared areas from one side to the other. Avoid placing grout from opposite sides in order to prevent voids. Work material firmly into the bottom and sides to assure good bond and to eliminate voids.

Ensure that foundation and baseplate are within maximum/minimum placement temperatures. Shade foundation from summer sunlight under hot conditions. Warm foundation when foundation temperature is below 45 degrees Fahrenheit (7 degrees Celsius).

Wet cure exposed shoulders for 48 hours followed by two coats of curing compound for best results. The minimal requirement is to wet cure until grout has reached final set, followed by two coats of curing compounds.

3.64 Injection Grouting

[CSI 03 64 00]

© 2023 RH2 Engineering, Inc.

3.64.23 Epoxy Injection Grouting

[CSI 03 64 24]

Part 1 – General

Summary

This section is for the repair of cracks at least 0.005 inches wide in water holding structures that result in excessive leakage.

All requirements shall be in accordance with ACI 503-7 and as specified herein.

References

Excessive leakage shall be as determined in Section 1.75.16.52.

All products in contact with potable water shall have NSF61 certification.

Quality Assurance

A meeting with the Contractor, Owner and Engineer is required to review the procedures at least five working days in advance of the work.

Core holes as required per ACI 503.7 shall be repaired watertight and to the satisfaction of the Engineer.

Acceptance criteria given in 1.5.7.1 of ACI 503.7 may be waived if, upon additional leak testing, excessive leakage is eliminated as determined by the Engineer.

Submittals

Submittals shall be in accordance with ACI 503.7-07, Specification for Crack Repair by Epoxy Injection.

Provide documentation showing the proposed repair products used successfully on at least five similar projects.

Part 2 – Products

Materials

Materials shall be in accordance with ACI 503.7-07, Specification for Crack Repair by Epoxy Injection.

Part 3 – Execution

Execution shall be in accordance with ACI 503.7, Specification for Crack Repair by Epoxy Injection.

© 2023 RH2 Engineering, Inc.

4.00 GENERAL

This division covers that work necessary for furnishing and installing masonry as described in these specifications and as shown on the Plans.

Sections in these specifications titled "*Common Work for . . .*" shall apply to all following subsections whether directly referenced or not.

4.05 Common Work for Masonry

[CSI 04 05 00]

This division covers that work necessary for providing materials and performing all masonry as described in these specifications and as shown on the Plans.

Part 1 – General

Submittals

Submittal information shall be provided to the Owner for the following items:

- Masonry Mortar
- Masonry Grout
- Reinforcing Steel Shop Drawings – Include plan view showing blocks and exact location of all vertical reinforcing.
- Concrete Masonry Units (CMU) – Provide certification for all units. Provide samples for all colored and/or faced units.
- Color Scheme
- Waterproofing materials
- Masonry Insulation
- Masonry Accessories
- Letter of Certification for Masonry Prism Testing as noted in the IBC

4.20 UNIT MASONRY

[CSI 04 20 00]

4.22 Concrete Unit Masonry

[CSI 04 22 00]

© 2023 RH2 Engineering, Inc.

Part 1 – General

Summary

This division covers that work necessary for furnishing and installing all Concrete Unit Masonry as described in these specifications and as shown on the Plans. Masonry mortar shall be used to properly level, position, bond together, seal irregularities, and provide a weather-tight joint between the concrete masonry units (CMU). Masonry grout shall be used to fill all CMU cells that contain reinforcing steel.

Related Sections

- Division 7.21.30 CMU Wall Insulation
- Division 9.05.00 Common Work for Finishes
- Division 9.06 Color Schedule
- Division 9.97.23 Concrete and Masonry Coatings: Interior walls
- Division 9.97.23.9 Exterior walls
- Division 9.97.23.10 Water repellant
- Division 9.97.23.11 Anti-graffiti

References

- 2012 International Building Code
- TMS 602/ACI 530.1/ASCE 6 Specifications for Masonry Structures
- TMS 402/ACI 530/ASCE 5
- ASTM A-615 Standard Specification for Deformed and Plain Carbon-Steel Bars for Concrete Reinforcement
- ASTM C-33, Standard Specifications for Concrete Aggregates
- ASTM C-67, Standard Test Methods for Sampling and Testing Brick and Structural Clay Tile
- ASTM C-90, Standard Specification for Loadbearing Concrete Masonry Units
- ASTM C-144 Standard Specification for Aggregate for Masonry Mortar.
- ASTM C-150, Standard Specification for Portland Cement
- ASTM C-207, Standard Specification for Hydrated Lime for Masonry Purposes
- ASTM C-270, Standard Specification for Mortar for Unity Masonry
- ASTM C-404, Standard Specification for Aggregate for Masonry Grout.
- ASTM C-476, Standard Specification for Grout for Masonry

© 2023 RH2 Engineering, Inc.

- ASTM C-744, Standard Specification for Prefaced Concrete and Calcium Silicate Masonry Units
- ASTM C1019, Standard Test Method for Sampling and Testing Grout

Design Requirements

Compressive strength shall be determined using the unit strength method or the prism test method in accordance with IBC Section 2105.2.2. Net Area compressive strength shall be a minimum of 1500 psi.

Mortar shall conform to section 2103.9 of the IBC for type "S" mortar with a minimum compressive strength of 1800 psi at 28 days.

Masonry grout shall comply with Article 2.2 of TMS 602/ACI 530.1/ASCE 6.

Storage, Delivery, and Handling

All blocks shall be covered and protected against wetting prior to use.

Stockpile and handle grout and mortar to prevent contamination from foreign materials; store admixtures to prevent contamination or damage from excessive temperature changes. Water to be used in mixing the grout shall be free from foreign materials.

Part 2 – Products

Materials

Concrete Masonry Units

Concrete Masonry Units shall be hollow load-bearing type, conforming to ASTM C-90, Grade N, Type 1, 1900 psi minimum. Provide aggregates meeting ASTM C33. All units, unless otherwise noted, shall have normal weight aggregate having a uniform quality, texture, and color. Unit sizes and shapes shall be 8 inches high by 16 inches long by 8 inches wide (nominal).

Masonry shall be smooth face as shown on the drawings.

Masonry Mortar

Cement shall meet ASTM C-150, lime shall meet ASTM C-207 and aggregates shall meet ASTM C-144.

Proportion mortar by volume and mix in a standard mortar mixer operated in accordance with manufacturer's recommendations. Mix ingredients thoroughly in dry form and add water to bring the mixture to the proper consistency for use. Do not hand-mix mortar.

Mortar proportioned in accordance with ASTM C270, Table 1 need not be tested. Where testing is required, mortar shall be laboratory tested prior to use in accordance with ASTM C270.

Provide mortar pigment to match owner-selected color of concrete masonry units.

Masonry Grout

Masonry grout components shall comply with ASTM C-150 for Portland cement and ASTM C-404 for aggregates.

© 2023 RH2 Engineering, Inc.

Per ASTM C-476 Fine Grout Standards, masonry grout shall consist of one-part Portland cement to three parts masonry sand and one-tenth part lime and shall have a minimum compressive strength of 2000 psi.

Compressive strength of masonry grout shall be determined in accordance with ASTM C1019.

Reinforcement

Joint reinforcing shall conform to Article 2.4 of TMS 602/ACI 530.1/ASCE 6.

Reinforcing steel bars shall be ASTM A-615, Grade 60. Provide bar lengths and sizes as shown on the Plans.

Components

Provide vertical reinforcement at all corners, on each side of openings 24 inches and larger than and at the intervals shown. Provide horizontal reinforcing at bond beams as shown on the Plans, and above and below all openings larger than 24-inches.

Accessories

Where called out, anchors shall be dovetail anchor slots and anchors. Anchor slots shall be equal to Burke "Fleming" masonry anchor slot and anchors shall be equal to "AA Wire Products Dovetail Flex-O-Look Channel and Ties", or equal.

Finishes/Colors

The Owner shall develop a color schedule of colored CMU and grout after award of the contract unless already shown on the Plans. Block colors shall be limited to two in a pattern decided by the Owner unless otherwise shown on the Plans.

Mortar color shall match one of the adjacent block course colors unless shown otherwise on the Plans.

Coat the following surfaces with the products identified under "Related Divisions" above.

- Exterior walls
- Interior walls

Part 3 - Execution

Preparation

When joining fresh masonry to set or partially set masonry construction, the Contractor shall clean the exposed surface of set masonry and remove loose mortar prior to laying fresh masonry.

The Contractor shall protect sills, ledges, and offsets from mortar drippings or other damage during construction. The Contractor shall protect the adjoining work from mortar droppings, and newly-laid masonry from damage and from rain until the mortar has set.

Installation

Masonry construction shall comply with the requirements of IBC 2104 and with TMS 602/ACI 530.1/ASCE 6.

© 2023 RH2 Engineering, Inc.

The cold weather construction provisions of TMS 602/ACI 530.1/ASCE 6, Article 1.8 C, shall be implemented when the ambient temperature falls below 40 degrees Fahrenheit (4 degrees Celsius).

The hot weather construction provisions of TMS 602/ACI 530.1/ASCE 6, Article 1.8 D, shall be implemented when the ambient air temperature exceeds 100 degrees Fahrenheit (37.8 degrees Celsius), or 90 degrees Fahrenheit (32.2 degrees Celsius) with a wind velocity greater than 8 mph (12.9 km/hr).

The Contractor shall lay only dry masonry units. When masonry needs to be sawed, only masonry saws shall be used to cut and fit masonry units. All units shall be set plumb, true to line, and with level courses accurately spaced. The masonry unit shall be adjusted to final position while the mortar is soft and plastic. If the units are displaced after the mortar has stiffened, the Contractor shall remove the units, clean the joints or mortar, and relay with fresh and clean units.

All joints shall be tooled and concave unless otherwise specified.

The Contractor shall remove mortar protruding into cells of cavities to be reinforced.

All un-grouted concrete masonry units with an exterior face shall be insulated as shown on the Plans and detailed in Division 7.

All masonry reinforcement and accessories shall be installed as shown on the Plans and submitted details. The Contractor shall not splice reinforcing except as shown on the Plans. The minimum splice, where not indicated, shall be 32 bar diameters or 24 inches, whichever is greater. All accessories shall be cleaned of all dirt, grease, oil, loose mill scale, excessive rust, or other foreign matter which may reduce bond with grout or mortar.

Fill all vertical and horizontal cells that contain reinforcing and as detailed on the Plans with grout. Cells shall have an unobstructed vertical alignment. The Contractor shall provide grouted bond beams where required. Provide lintels made up of reinforced, grouted lintel sections over all wall openings as shown on the Plans. The Contractor shall install horizontal and vertical reinforcing and hold in position as the work progresses to maintain the following clearance between the reinforcing and the block surface: 1½ exterior, ¾-inch interior.

The maximum lift for grout pours shall be 4 feet. The Contractor shall make sure that the grout is consolidated with a vibrator immediately after pouring and re-consolidate after excess moisture has been absorbed; but before plasticity is lost. Provide clean-outs at the bottom of all grouted courses. Contractor may eliminate clean-outs at the Owner's discretion, if the bottoms of all cells are free of knocked-off mortar fins and dirt. The Contractor shall hold grout 1½ inches below the top of the upper most units when work stops for over one hour, and thoroughly clean and roughen the joint before proceeding with the work.

The Contractor shall grout full-space-around door frames and other built-in items. Build in all work with the masonry including anchor bolts. Build in wall plugs, doors, windows, and accessories and plumbing appurtenances as erection progresses.

At the stoppage of work at any time, the work shall be covered with tarpaulins or boards to prevent rain or snow from entering the cores of the block. The walls shall be adequately

© 2023 RH2 Engineering, Inc.

braced to support masonry. If mortar or grout has been misplaced, the Contractor shall have it immediately removed.

Shore reinforced lintels a minimum of 14 days after grout placement or until a 28-day strength is achieved.

Prior to completion, fill all holes in joints. All defective joints shall be cut out and repointed. At the end of each day's work and after final pointing, dry-brush the masonry surface.

Field Quality Control

Variations from plumb, specified grade, conspicuous lines, and walls shall be plus or minus ¼ inch in any 10-foot length, not to exceed plus or minus 1 inch overall. Variations from dimension shall not exceed plus or minus ½ inch.

Special Inspection shall be in accordance with Table 1.18.3 (Level C Quality Assurance) of TMS 402/ACI 530/ASCE 5.

Also see Statement of Special Inspections on the Drawings. Provide 48-hour notice to Owner prior to needing the required inspections.

Comply with local building department and permit requirements for inspection and notification.

The Contractor shall repair, replace or modify, as appropriate, any items noted in the Special Inspector's inspection or the building department inspection.

The Contractor shall provide verification to the Engineer that site-produced mortar meets the required proportions using visual observations. Engineer reserves the right to require additional testing in accordance with ASTM C 270.

Field testing of grout shall meet the requirements of ASTM C1019. The testing agency shall take a minimum of three grout samples for every 5,000 square feet of wall placed (and a minimum of four per week); two for 28-day tests, and one for backup testing in case the other two samples do not meet design strength. Additional samples may be taken to verify strength at the Contractor's expense.

© 2023 RH2 Engineering, Inc.

5.00 GENERAL

This division covers that work necessary for furnishing and installing metalwork as described in these specifications and as shown on the Plans.

Sections in these specifications titled "*Common Work for* . . . apply to all following subsections whether directly referenced or not.

5.05 Common Work for Metals

[CSI 05 05 00]

Part 1 – General

Related Sections

- Division 1.81.45 Location Designations
- Division 9.90.00 Common Work for Painting and Coating
- Division 9.90.01 Color Schedule
- Division 9.91.13.12 Metals in contact with Concrete
- Division 9.91.13.01 Exterior metals
- Division 9.91.23.01 Metals interior
- Division 9.91.23.04 Galvanized iron and nonferrous
- Division 9.91.33 Submerged metals
- Division 1.81.30 Seismic Restraint

Submittals

Submittal information shall be provided to the Owner for the following items:

- Shop Drawings showing details of Fabricated Metalwork including connections and welding
- Calculations and plans stamped by a professional engineer licensed in the State of Washington for all Contractor- or Manufacturer-designed components or assemblies.

Inspections

Unless otherwise noted on the Plans, specifications, or building department requirements, special inspections related to metal fabrications, placement and welding shall be subject to 48-hour notice to the Engineer prior to the inspection time. 48-hour notice is defined in Division 1, Contractor Responsibility.

Any Field welding shown on the Plans will require special inspections in accordance with section 1704.3 of the IBC and AISC 360.

© 2023 RH2 Engineering, Inc.

Quality Assurance

Only prequalified welds (as defined by AWS) shall be used.

Fabricator shall be registered and approved by American Institute of Steel Construction (AISC) to perform shop fabrication without special inspection. Submit certificate of compliance to the Owner at the completion of fabrication. Owner will forward this to the Building Official.

If fabricator is not registered and approved, or the certificate of compliance is not received, the Contractor shall reimburse the Owner for all Special Inspections required by the IBC on shop fabricated items. The Contractor shall also reimburse the Owner for all Special Inspections required by the IBC for field welding not specifically shown on the Plans. Contractor shall alert Owner at least 30 calendar days in advance if such Special Inspections will be required in order to procure the services of a testing lab.

Special Inspection by the Owner does not relieve the Contractor of responsibility of performing his own inspections and testing to ensure that all items are properly constructed.

Part 2 – Products

Materials

Structural Steel

Structural steel shall conform to the following requirements:

Plates, shapes, angles, rods - ASTM A36 and A992, Fy ≥ 36 ksi

Special shapes, plates - ASTM A572, Fy ≥ 50 ksi

Pipe Columns - ASTM A53, Grade B Type E or S, Fy ≥ 35 ksi (see Division 15.22 for steel pipe carrying fluids).

Structural Tubing - ASTM A500, Grade B, Fy ≥ 46 ksi

Stainless Steel

Stainless steel shall be type 304 (non-welded) or type 304L (welded) or as called out.

Plates - ASTM A240

Fasteners - ASTM F593

Extruded Structural Shapes - ASTM A276

Pipe - ASTM A240 or higher grade or as called out.

See Section 15.22.4 for information on pipe used for mechanical applications.

All stainless steel shall have a standard mill finish where concealed or No. 4 finish where exposed and shall be cleaned of all foreign matter before delivery to the job site.

Aluminum

Plates - ASTM B209, Type 6061-T6

Extruded Shapes - ASTM B308, Type 6061-T6

© 2023 RH2 Engineering, Inc.

Pipe - ASTM B210 Type 6061

Architectural Applications - ASTM B210, Type 6063

Aluminum materials in contact with concrete or other metals or other masonry materials shall have surfaces coated per Division 9.

Galvanized Steel

Base metal shall be as specified for Mild Steel.

Hot-dip galvanized after fabrication in accordance with ASTM A 924/A 924M.

Finishes: For pieces that will NOT be painted, galvanize with zinc coating in accordance with ASTM A 653/A 653M. For pieces that WILL be painted, galvanneal with zinc/10 percent iron coating in accordance with ASTM A 653/A 653M.

Manufactured Units

Design of Contractor- or Manufacturer-designed components or assemblies shall meet the specific component requirements as provided here-in, as well as all applicable state and federal codes. Design shall include gravity loads and seismic loads in accordance with ASCE 7-10 Chapter 13 "Seismic Design Requirements for Nonstructural Components". Design criteria shall be as provided herein for components, and as provided on the Plans.

Contractor-designed components and assemblies shall be shop welded and field bolted if possible. Field welding will NOT be allowed unless specifically shown, or there is no reasonable alternative.

Finishes

All steel fabrications shall be surface prepped, shop primed and field coated in accordance with Division 9. Shop priming shall be protected as required to prevent damage to the coating during shipping. Hold back shop priming from areas to be field welded.

Isolate and coat dissimilar metals to prevent galvanic corrosion.

Non-exposed structural steel: Mill finish or as shown on Plans

Exposed structural steel (damp or wet locations): Division 9

Aluminum: Division 9

Galvanized steel: Division 9

Stainless steel: Uncoated

Part 3 – Execution

Fabrication

All welding shall be in accordance with AISC and American Welding Society (AWS) standards and shall be performed by AISC and/or AWS certified welders using electrodes to match base material. Only prequalified welds (as defined by AWS) shall be used. Welding inspection shall be performed in accordance with the applicable AWS provisions and Chapter 17 of the IBC. Shop welding requiring inspection or testing per IBC Chapter 17 must be tested by an independent testing laboratory certified by AWS and approved by the owner at the

© 2023 RH2 Engineering, Inc.

Contractor's expense. Field welding, where required or allowed, will be inspected by a representative of the owner at the owner's expense. This does not relieve the Contractor of responsibility of performing his own inspections and testing to ensure that all items are properly constructed.

All shop welds shall be ground smooth.

Any shop paint on metal surfaces adjacent to joints to be field welded shall be wire brushed to remove the paint film prior to welding.

Where steel items to be welded are galvanized, galvanizing must first be removed by grinding with a silicon carbide wheel, by grit blasting or by sand blasting.

Any cutting or grinding equipment used on stainless steel must be new or only previously used on other stainless-steel material.

All stainless-steel shop welds shall be pickled after welding to remove heat damage and contaminants. Field welds must be passivated using an Engineer approved product (Citrisurf 2210 or equal). If the metal will be in contact with potable water, pickling and passivation products must be citric acid based and thoroughly removed, or use a product approved by USDA or NSF.

Installation

Fabrications shall be installed as shown on the approved shop drawings. All members shall be accurately located and erected plumb and level.

Metal fabrications shall be installed or erected as based on the American Institute of Steel Construction (AISC) "Specification for the Design, Fabrication, and Erection of Structural Steel for Buildings", latest edition, plus all referenced code requirements.

Temporary bracing, such as temporary guys, braces, false-work, cribbing, or other elements, shall be provided by the Contractor in accordance with the requirements of the "Code of Standard Practice", wherever necessary to accommodate all loads to which the structure may be subjected, including construction loads. Such bracing shall be left in place as long as may be required for safety. As erection progresses, the work shall be securely bolted or welded to compensate for all loads during construction.

No permanent bolting or welding shall be performed until the structure has been properly aligned.

5.05.23 Bolts and Other Connectors For Structural Elements

[CSI 05 05 23, 06 05 23]

Part 2 – Products

Materials

Bolts and other connectors not specifically called out otherwise shall be in accordance with the following.

Under no circumstances shall the fasteners be of lesser strength or higher corrosion potential than the materials being connected.

© 2023 RH2 Engineering, Inc.

Connection bolts, nuts and washers for all materials in wet, damp or corrosive locations shall be Stainless Steel, alloy 304 in raw domestic or treated domestic water, alloy 316 in treatment process and sewage applications, and alloy 317 for acidic transport. Bolts and nuts shall meet ASTM F593B (bolts ¼-inch to 1½-inch in diameter with 30 ksi yield) and F594B (nuts). Use Nitronic 60 bolts and nuts for strong chlorine environments.

Steel and cast-iron fabrications: Connection bolts for dry locations shall be ASTM A307 galvanized or zinc plated bolts.

Structural Plastic Fabrications: Connection bolts shall be ASTM A307 galvanized in dry applications and Stainless Steel in wet, damp or corrosive locations.

Aluminum Fabrications: Connection bolts shall be ASTM A307 galvanized. Aluminum fasteners may be allowed where high strength is not needed (e.g. mounting expanded metal screens, or louver fins), confirm with Engineer prior to use. Steel screws must be galvanized, or zinc plated. 300 Series stainless steel fasteners allowed only with the use of isolating washers.

Stainless steel fabrications: Fasteners to match same stainless series as structure (e.g. 300 series fasteners with 300 series structure)

Bolts installed into hardened concrete and CMU shall be Concrete Anchors per section 3.15.19.

Bolts and studs shall be long enough that at least two threads extend beyond the face of the tightened nut.

For pump anchor bolts, see Division 11.

For mechanical pipe (non-structural) connections, see Division 15.21, "Common Work for Pipe and Fittings".

Part 3 – Execution

Installation

All materials to be joined together shall be connected as shown on the Plans, specifications, as recommended by the manufacturer, or as required by standard industry practices if not otherwise specified.

Dissimilar metals:

In damp locations, isolate dissimilar metals using nylon isolation sleeves and washers, Cooper B-Line Nylon Headed Sleeve Kit or equal.

For wet locations: avoid dissimilar metals unless specifically approved or shown. Use similar metals with welded connections. If approved or shown, use galvanized mild steel bolts installed into prepped and coated holes with additional field coating over the top of bolt.

5.50 METAL FABRICATIONS

[CSI 05 50 00]

© 2023 RH2 Engineering, Inc.

5.51 METAL STAIRS

[CSI 05 51 00]

5.51.05 Common Work for Stairs and Ladders

[CSI 05 51 05]

Part 1 – General

Related Sections

This section also applies to section 6.72.23 Composite Stair Assemblies, and 6.72.33 Composite Ladders.

Design Requirements

Stair treads shall be pre- fabricated units that bolt on to stair side rails. Stair treads shall meet all ASCE 7, IBC, and OSHA Section 1910.24 requirements.

Ladders shall meet the requirements set forth in the IBC, ASCE 7, OSHA 1910.27 and WAC 296-876

Safety cages, platforms, and fall prevention devices shall be provided as shown on the Plans. They shall comply with WAC Section 296-876-60065 through 296-876-60080.

Ladders shall extend the full distance from base landing to top access plus extension. Ladders that are short shall be field extended by method approved by the Engineer or replaced with proper length ladder.

Part 2 – Products

Materials

All ladders and ladder accessories shall be hot-dipped galvanized steel, aluminum, or fiberglass as indicated on the Plans.

Fabrication

Ladders shall be shop assembled, pre-drilled and prepared for field attachment of standoff clips, or as otherwise shown.

© 2023 RH2 Engineering, Inc.

6.00 GENERAL

Sections in these specifications titled "*Common Work for . . .*" shall apply to all following subsections whether directly referenced or not.

6.05 Common Work for Wood, Plastics, and Composites

[CSI 06 05 00]

Part 1 – General

Submittals

Submittal information shall be provided to the Owner for the following items:

- Structural Panels
- Structural Lumber
- Preservative Wood Treatment
- Shop Fabricated Structural Wood
- Glued-Laminated Construction
- Millwork
- Wood Trim.

Part 3 – Execution

Construction

Provide temporary bracing, such as temporary guys, braces, false-work, cribbing, or other elements, in accordance with the requirements of the "Code of Standard Practice", wherever necessary to accommodate all loads to which the structure may be subjected, including construction loads. Leave bracing in place for as long as required for safety. Securely fasten the work as erection progresses to compensate for all loads during construction.

Perform no permanent fastening until the structure has been properly aligned.

6.10 ROUGH CARPENTRY

[CSI 06 10 00]

6.11 Wood Framing

[CSI 06 11 00]

Part 1 – General

References

U.S. Department of Commerce/National Institute of Standards and Technology - American Softwood Lumber Standard PS 20.

© 2023 RH2 Engineering, Inc.

American National Standards Institute / American Forest and Paper Association National Design Specifications (ANSI/AF&PA NDS).

Part 2 – Products

Components

Structural lumber shall be of the nominal dimensions shown on the Plans and shall not exceed 19 percent moisture content when installed. All pieces shall be Kiln Dried Hem Fir or Spruce-Pine-Fir No. 2 grade or better unless otherwise specified on the Plans.

Lumber and other wood members shall meet requirements of ANSI/AFPA NDS: National Design Specification for Wood Construction, American Forest & Paper Association/American Wood Council, current edition. If a different edition is called out on the plans, that edition will govern.

Accessories including bolts with necessary nuts and washers, timber connectors, drift pins, dowels, nails, screws, spikes, and other metal fastenings shall conform to ASTM A-307. Provide bolts with malleable iron washers under nuts.

Nails shall be round wire of standard form. Spikes shall be button-head boat spikes. Galvanize bolts, dowels, washers, spikes, and other hardware, including nails, in accordance with ASTM A-153.

<u>Preservative Treated Wood</u>

All wood members which contact concrete or masonry shall be naturally durable wood or preservative-treated wood using water-borne preservatives, in accordance with AWPA U1 (Commodity Specifications A or F) for above-ground use. Coat cut ends of pressure treated wood with copper naphthenate based wood preservative.

- All fasteners in contact with preservative treated wood shall be hot-dip galvanized
- All connectors in contact with preservative treated wood shall be hot-dip galvanized
- Interior connectors in contact with preservative treated wood that are not exposed to the elements may be G185 galvanized.

Part 3 – Execution

Construction

Accurately cut and frame all lumber so that joints will have a close fit over entire contact surface. Secure lumber and piles in their proper alignment. No shimming will be permitted in making joints, nor will open joints be accepted. Bore holes in small timbers for boat or wire spikes with a bit of the same diameter or smallest dimension of the spikes, when necessary, to prevent splitting. Counterbore for countersinking wherever smooth faces are required.

Connectors and fasteners shall comply with the applicable provisions of IBC Sections 2304.9.1 through 2304.9.7. The number and size of fasteners connecting wood members shall not be less than that set forth in IBC Table 2304.9.1.

© 2023 RH2 Engineering, Inc.

6.12 Wood Structural Panels

[CSI 06 12 00, 06 16 00]

Part 1 – General

Design Requirements

Wood structural panels shall conform to the requirements of Performance Standard for Wood-Based Structural Use Panels, DOC PS1 or PS2, United States Department of Commerce, National Institute of Standards and Technology. Thickness as shown on the Plans. Composite panels are not allowed.

Wood structural panels shall meet requirements of ANSI/AFPA SDPWS: American Forest & Paper Association/American Wood Council Special Design Provisions for Wind and Seismic, current edition. If a different edition is called out on the plans, that edition will govern.

Part 3 – Execution

Construction

Provide blocking at unframed panel edges where noted on the Plans. Nail sheathing as shown on the Plans. If not shown, provide nailing as follows, at a minimum: 8d nails at 6 inches on center at framed panel edges, trusses, and diaphragm boundaries and 12-inches on center elsewhere.

6.20 FINISH CARPENTRY

[CSI 06 20 00]

6.20.05 Common Work for Finish Carpentry

[CSI 06 20 05]

Part 1 – General

Summary

Furnish all architectural woodwork shown on the Plans and specified herein. Architectural woodwork includes all exterior and interior non-structural woodwork exposed to view in finished project including shelving, millwork, trim, and plastic laminates.

Related Sections

- Division 9.90.05 Common Work for Paint and Coating
- Division 9.90.06 Color Schedule
- Division 9.91.13.10 Exterior Wood
- Division 9.91.23.11 Interior Stain
- Division 9.91.23.12 Interior Paint

© 2023 RH2 Engineering, Inc.

References

The "Quality Standards" of the Architectural woodwork institute (AWI) shall apply and, by reference, are hereby made a part of this specification. Any reference to premium, custom, or economy in this specification shall be defined as the latest edition of the AWI "Quality Standards".

Part 2 – Products

Quality Control

Discard material with defects which might impair the quality of work, and units which are too small to fabricate the work with minimum joints or optimum joint arrangement. Finish trim boards are to be selected for straight and un-warped / un-curled shape.

Part 3 – Execution

Installation

Set carpentry work accurately to required levels and lines, with member plumb, true, and accurately cut and fitted. All exposed trim work is to be mitered at corners. Where long runs require more than one board, cut ends at 45 degrees.

Securely attach carpentry work to substrates by anchoring and fastening as shown and as required by recognized standards. Countersink nail heads on exposed carpentry work and fill holes. Use common wire nails or finishing screws, except as otherwise indicated. Use finishing nails for finish work. Select fasteners of size that will not penetrate members where opposite side will be exposed to view or will receive finish materials. Make tight connections between members. Install fasteners without splitting of wood; pre-drill as required. Fill nail holes with putty prior to painting. Provide adequate end and edge distances.

Install hardware specified or required to complete the project. Adjust movable parts to operate perfectly at time of final acceptance. Make further adjustments required during the guarantee period.

6.22 Millwork

[CSI 06 22 00]

6.22.13 Standard Pattern Wood Trim

[CSI 06 22 13]

Part 2 – Products

Materials

Trim board material as shown on the Plans. If not shown on the Plans, trim board shall have a smooth, untextured finish and be high density fiberboard (HDF), oak, or fir.

© 2023 RH2 Engineering, Inc.

Part 3 – Execution

Installation

Install trim board straight and true. Miter all corners. Caulk where gaps between the trim and the mating surface are unavoidable.

© 2023 RH2 Engineering, Inc.

Division 7
Thermal and Moisture Protection

7.00 GENERAL

This division covers furnishing all labor, materials, and equipment for providing a structure that is completely weather-tight.

Sections in these specifications titled "*Common Work for . . .*" shall apply to all following subsections whether directly referenced or not.

7.05 Common Work for Thermal and Moisture Protection

[CSI 07 05 00]

Part 1 – General

Submittals

Submittal information shall be provided to the Owner for the following items:

- Ceiling liner
- Foundation drainage
- Geocomposite foundation drainage
- Sheet waterproofing
- Thermal insulation
- Ceiling insulation
- Foundation insulation
- CMU wall insulation
- Piping insulation
- Rigid insulation
- Vapor barrier
- Air barrier
- Roofing System
- Siding
- Flashing and sheetmetal
- Vents
- Joint sealants
- Caulk

© 2023 RH2 Engineering, Inc.

Warranty – Roofing System

The roofing Contractor shall warrant the roof system provided under this contract against leakage, and defects in materials and workmanship for a period of two years after date of project acceptance. The roofing system manufacturer shall provide a warranty for the roof system against leakage and defects in materials for a period of eighteen years after the roofing Contractor warranty expires.

Following roof installation, supplier shall furnish services of a qualified manufacturer's representative to inspect the roof and inform Owner of any defects or concerns regarding condition of roofing system at the job site. Contractor shall provide repair as necessary to the satisfaction of the manufacturer representative at Contractor's expense. Upon resolution of any defects or concerns (if any), manufacturer's warranty shall then be in full effect. The finished roofing system shall be free from leaks, warps, permanent discoloration, and coating degradation for the warranty period.

The roofing system manufacturer's warranty shall be non-prorated and in full effect (100 percent covered) for the full 2 years following project acceptance.

The manufacturer's warranty shall be non-prorated and in full effect (100 percent covered) for the full 18 years following the roofing Contractor's warranty.

7.10 DAMPPROOFING AND WATERPROOFING

[CSI 07 10 00]

7.13 Sheet Waterproofing

[CSI 07 13 00]

7.13.30 Geocomposite Foundation Drainage

[CSI 07 13 30]

Part 1 – General

Description

The work in this section includes requirements for prefabricated drainage panels. The extent of the prefabricated drainage panels and drainage piping is indicated on the Drawings. Panels shall be Miradrain 6200 or approved equal.

Referenced Specifications, Guides, and Recommendations

The latest edition of the following publications form a part of this specification to the extent indicated by the references thereto.

<u>Polymeric Core</u>

a. ASTM D-1621-79: Compressive Properties of Rigid Cellular Plastic

b. ASTM D-4716-87: Constant Head Hydraulic Transmissivity (In-Plane Flow) of Geotextiles and Geotextile Related Products

c. ASTM D-1777-75: Measuring Thickness of Textile Materials

© 2023 RH2 Engineering, Inc.

Filter Fabric

a. ASTM D-4491-85: Water Permeability of Geotextiles by Permittivity

b. ASTM D-4632-86: Breaking Load and Elongation of Geotextiles (Grab Method)

c. ASTM D-3776-85: Mass per Unit Area (Weight) of Woven Fabric

d. ASTM D-3786-80a: Hydraulic Bursting Strength of Knitted Goods and Nonwoven Fabrics - Diaphragm Bursting Strength Tester Method

e. ASTM D-4751-87: Apparent Opening Size (AOS)

Submittals

Submit the following samples for approval:

1. One 5-inch square of Panel.
2. One unit of the attachment device to be used in securing the panel to the substrate.
3. Submit copies of the manufacturer's information regarding product description, product usage, and product application for all materials proposed for use on the Project.

Part 2 – Products

Panels

Panels shall consist of a high performance, high strength, composite drainage panel having: 1) a three-dimensional, high impact, polystyrene core, with a nominal one-inch flange on one longitudinal edge; and, 2) non-woven filter fabric. The filter fabric shall be bonded to the individual dimples of the molded, polystyrene core to minimize fabric intrusion into the flow channels caused by backfill pressure. The fabric shall also serve as a filter medium to prevent the passage of soil particles into the core. The fabric shall extend beyond the edges of the polystyrene core to provide overlap for the adjacent panels and discharge pipe (if required on the Drawings).

Composite System

The panels must have a nominal 1-inch flange on the longitudinal edge to facilitate overlapping the panels in order to achieve a continuous drainage surface.

The filter fabric must be uniformly bonded to each dimple of the polymeric core to resist being pushed into the core flow channels during backfilling. Application of glue to the filter fabric or core may result in restriction of flow in the channels and will not be accepted. The fabric-to-core bonding shall be accomplished by applying a pressure-sensitive resealable adhesive to the tops of the individual dimples.

The filter fabric shall extend beyond the edge of the polymeric core in order to provide total filtering integrity of the drainage system.

© 2023 RH2 Engineering, Inc.

Product Property Values Chart

Property	Test Method	Unit	Typical Value
Core			
-Thickness	ASTM D-1777	inch	0.40
-Compressive Strength	ASTM D-1621	psf	16,500
-Puncture Resistance	ASTM D-4833	lbs.	95
Filter Fabric -Apparent Opening Size	ASTM D-4751	US Std. Sieve	70
Water Flow Rate	ASTM D-4491	gpm/ft^2	110
-Grab Tensile Strength	ASTM D-4632*	lb.	160
Composite System Water Flow Q,@ 3600 psf Hydraulic Gradient of 1 and 300 hours	ASTM D-4716	gpm/ft.	17

* Supersedes ASTM D-1682

Test Properties

The specified properties of drainage panels must be supported by test results from an independent laboratory, documenting the specified flow rate in the plane of the core and creep performance of the polymer core. The testing conditions shall comply with ASTM D-4716-87 and as follows:

1. Hydraulic Gradient: 1.0 for vertical installations and 0.08 for horizontal installation.
2. Normal Pressure (pressure imposed perpendicular to the plane of the core): Equal to 3600 psf.
3. Creep: Model long-term compression of the prefabricated drainage composite system and determine if the drain product flow channels become restricted with time. Long term creep/drainage performance shall be determined by measuring flow after 300 continuous hours under the above referenced normal pressure. The test method shall utilize a loading system which models the soil/drainage product interaction.

Flow Direction

Flow shall be measured on only one side of the core. Where the core geometry differs in principal directions, flow shall be measured in both directions, simulating water flowing vertically down a wall and horizontally across the face of the wall to accurately determine maximum flow rate in the critical principal direction.

© 2023 RH2 Engineering, Inc.

Delivery, Storage, and Handling

1. Materials should be delivered in manufacturer's original, unopened packaging with labels attached.
2. Store materials in the original unopened packages.
3. All materials must be handled in a manner to prevent damage. Any materials damaged must be removed from the project area and replaced with new material.

Part 3 – Execution

Vertical Surfaces

Position the panel with the flat side against the wall and filter fabric toward the soil/drainage side.

Place the panel over the damp-proofing coating specified in Section 9.97.23 of these specifications. Use two-sided tape, panel adhesive, or adhesive-backed insulation hangers to secure the panel to the waterproofing coating on the exterior wall. The attachment method and material shall be compatible with the waterproofing and panel material.

Panel attachment shall be completed by pulling the filter fabric back to expose two rows of dimpled core. The end of the next panel shall be placed over two dimples and interlocked. Panel end attachment shall be accomplished by placing three 6-inch pieces of two-sided tape on the flat side of each of the adjacent panel ends. Butt the edges of the panels together and press into the wall.

All connections shall be completed in shingle fashion so that moisture will flow with the overlap and not against it.

Overlap fabric in the direction of water flow. Cover all terminal edges with the filter fabric flap by tucking it behind the core.

Horizontal Surfaces

Connect adjacent panels at the longitudinal edge by pulling the filter fabric back to expose the flange. Cut off the 3-inch excess fabric along the flangeless longitudinal edge of the panel that will be placed over the previous panel flange. Place a small amount of two-sided tape or mastic on the flange. The flangeless edge of the panel shall be placed on top of the flange of the adjacent panel and butted dimple to dimple. Panel end attachment shall be completed by pulling the filter fabric back to expose two rows of dimpled core. The end of the next panel shall be placed over two dimples and interlocked. All connections shall be completed in shingle fashion so that moisture will flow with the overlap and not against it.

Terminal Connections

Terminal Connections and Protrusions: Cover all terminal edges with the integral fabric flap by tucking it around the edge of the core and securing it. At protrusions, cut the core around the protrusion, cut an "X" in the fabric, and tape the fabric around the protrusion. Dirt and concrete must not infiltrate the core.

© 2023 RH2 Engineering, Inc.

Protection of Panels

During installation of the panels and during the backfilling operations, extreme care shall be taken to assure that the prefabricated drainage panels are not damaged, torn or punctured. In the event that damage to the panels should occur, the backfilling shall be discontinued until the panels have been repaired to the satisfaction of the Engineer.

7.20 THERMAL PROTECTION

[CSI 07 20 00]

7.21 Thermal Insulation

[CSI 07 21 00]

7.21.16 Blanket Insulation

[CSI 07 21 16]

Part 1 – General

Performance Requirements

Insulation shall be Kraft-paper-faced batt with a minimum R value of 42.

Part 2 – Products

Manufacturers

Ceiling insulation shall be equal to Owens Corning.

Part 3 – Execution

Installation

Provide and install ceiling insulation as shown on the project Plans. Place insulation with craft paper face down and as recommended by the manufacturer. Insulation shall be placed to the extents possible to cover the attic. Place baffles above the insulation as the slope of the roof meets the building edge.

Part 3 – Execution

Installation

The abutting joints shall be staggered so that no joint from the bottom layer of insulation lies directly below a joint from the top layer of insulation. The insulation shall be fastened using mechanical fasteners to the metal roof support deck as recommended by the manufacturer. Fasteners shall penetrate only the top ridges of the steel roof support deck.

© 2023 RH2 Engineering, Inc.

7.21.13.13 Foam Board Insulation

[CSI 07 21 13.13]

Part 1 – General

Performance Requirements

Provide a minimum R value of 10. Insulation for foundations shall be suitable for direct bury application. Unless shown otherwise on the plans, board against vertical foundation walls shall be minimum R-10 on interior face or R-12 on exterior face.

Storage and Handling

Protect insulation stored on the jobsite from physical damage and direct sunlight. Store off the ground and cover with a light color polyethylene film. Make sure the covered insulation is well ventilated to prevent excessive temperature build-up.

Part 2 – Products

Manufacturers

Insulation shall be Foamular 150 as manufactured by Owens Corning or equal.

Part 3 – Execution

Installation

Extruded polystyrene insulation shall be placed as shown on the Plans. Do not damage insulation during installation and take adequate care to backfill soils to meet compaction standards while not damaging insulation. For foundations, finish top edge of insulation 1-inch to 2-inches below finished ground elevation.

Install only as much insulation as can be covered, at least temporarily, during the same day.

7.21.30 CMU Wall Insulation

[CSI 07 21 30]

Part 1 – General

Performance Requirements

All non-grouted exterior exposed CMU walls to be filled with vermiculite, or equivalent fill.

Part 3 – Execution

Installation

Insulation shall be installed by methods and personnel approved by the block manufacturer.

© 2023 RH2 Engineering, Inc.

7.24 Exterior Insulation and Finish Systems

[CSI 07 24 00]

7.24.32 Exposed Small Piping Insulation

[CSI 07 24 32]

Part 2 – Products

Manufacturers

Insulation shall be equal to S and S Industries.

Part 3 – Execution

Installation

All exposed piping 1-inch and less used to distribute hot, tepid, cold, potable, and non-potable water shall be insulated with closed-cell polystyrene insulation pre-slit and installed per manufacturer's written information. Insulation shall be sized to match the diameter of the piping.

7.24.34 Exposed Large Piping Insulation

[CSI 07 24 34]

Part 1 – General

Performance Requirements

Insulation for exposed conditions shall be UV resistant and appropriate for exterior exposure in temperature ranges of -20 degrees Fahrenheit to 120 degrees Fahrenheit. Insulation shall have a minimum R-10 performance.

Part 2 – Products

Manufacturers

Insulation equal to Urecon Pre-Insulated Pipe.

Materials

Insulation shall be rigid polyurethane foam, suitable for the environment in which it will be installed.

Include integral conduit through insulation for electric heat tape.

Part 3 – Execution

Installation

Install per manufacturers recommendations. Seal gaps in insulation between joints with manufacturers supplied products. Repair any damaged insulation per manufacturer's instructions.

© 2023 RH2 Engineering, Inc.

7.26.30 Roof Vapor Retarders

[CSI 07 26 30]

Part 1 – General

Submittals

Submit vapor barrier, including methods for attachment, for approval by the engineer.

Performance Requirements

The membrane shall be 45 Mils thick, uniform in appearance, and free from defects.

Part 2 – Products

Manufacturers

Vapor barrier shall be equal to GenFlex EPDM Elastomeric Membrane.

Part 3 – Execution

Installation

Work covered in this section consists of furnishing all labor, material, and equipment for vapor barrier membrane as shown on the Plans and as specified herein. Vapor barrier shall be attached below the insulation using GenFlex EPDM Fully Adhered Mechanical system or equal, attached as recommended by the manufacturer. Vapor barrier shall be applied in dry weather only.

Follow all manufacturer's recommendations regarding product delivery, storage, and handling of materials.

7.27 Air Barrier

[CSI 07 27 00, or 01 83 16]

Part 1 – General

Performance Requirements

A continuous air barrier shall be provided throughout the building thermal envelope. The thermal envelope of buildings shall comply with Sections C402.4.1 through C402.4.8 of the 2012 Washington State Energy Code, Commercial Provisions.

Part 3 – Execution

Field Quality Control

The completed building shall be tested by the Contractor. The air leakage rate of the *building envelope* shall not exceed 0.40 cfm/ft^2 at a pressure differential of 0.3 inches water gauge in accordance with ASTM E 779 or an equivalent method approved by the Code Official. A report that includes the tested surface area, floor area, air by volume, stories above grade, and leakage rates shall be submitted to the building owner and the Code Official. If the tested rate exceeds that defined here, a visual inspection of the air barrier shall be conducted and any leaks noted shall be sealed to the extent practicable. An additional report identifying the

© 2023 RH2 Engineering, Inc.

corrective actions taken to seal air leaks shall be submitted to the building owner and the Code Official and any further requirement to meet the leakage air rate will be waived.

7.40 ROOFING AND SIDING PANELS

[CSI 07 40 00]

7.42.93 Soffit Panels

[CSI 07 42 93]

Part 1 – General

Design Requirements

The panels shall be able to withstand the wind loading identified in the Plans.

Finishes

Finish all panels as recommended by the manufacturer. Color shall be chosen by the owner from a minimum of 15 colors.

Part 2 – Products

Materials

Steel panels shall be equal to AEP Span Prestige Series (PS-12) soffits. Panels shall have a Zincalume or Kynar finish. Vented and non-vented soffit panels shall have matching beads or groove widths and matching finishes. Provide venting per local building code requirements. All vents shall include aluminum or galvanized bird screens.

Fiber Cement soffit panels shall be James Hardie Hardiesoffit or of equal. Install and finish all panels as recommended by the manufacturer. The panels shall be able to withstand the wind loading identified in the Plans. Provide venting per local building code requirements. All vents shall include aluminum or galvanized bird screens.

Part 3 – Execution

Installation

Panels shall run perpendicular to rafters. Install panels next to transition between wall and eave as recommended by the manufacturer.

7.60 FLASHING AND SHEET METAL

[CSI 07 60 00]

7.61 Sheet Metal Roofing

[CSI 07 61 00]

© 2023 RH2 Engineering, Inc.

7.61.05 Common Work for Metal Roofing

[CSI 07 61 05]

Part 1 – General

General

Work covered in this section consists of furnishing all labor, material, and equipment for preformed metal roofing as shown on the Plans and as specified herein.

Submittals

Submit shop drawings detailing all edges, hips, valleys, eaves, rakes, other flashing and include fastener schedule and in accordance with Division 1.33. Prior to Engineer review, Contractor shall have the shop drawings reviewed and approved by the system manufacturer.

The Roofer shall submit a list of a minimum of five (5) successfully completed projects with owner references, total roofing system square footage and roofing cost. The Roofer shall be regularly engaged in construction of metal roofing systems and approved to install metal roofing by the accepted system manufacturer. Such approval shall be submitted in writing along with the shop drawings as specified below.

Storage and Handling

The Contractor is responsible for continuously maintaining materials subject to precipitation or weather damage in new condition. Replace warped or weathered plywood, insulation, or other materials damaged by climatic conditions.

Follow all manufacturer's recommendations regarding product delivery, storage, and handling of materials.

Part 2 – Products

Materials

Materials shall be purchased directly from the manufacturer's commercial department to verify that the Contractor is approved by the system manufacturer to install the roofing system specified.

All materials shall be provided by one manufacturer, conform to the current IBC and the local building code.

Roofing underlayment shall be Ice and Water Shield as manufactured by Grace or approved equal.

Fasteners shall be as recommended by the roofing manufacturer; lengths as required. Other miscellaneous exposed fasteners shall be stainless steel or ZAC (exposed head of zinc/aluminum alloy). Fasteners shall be of the length to penetrate the top ridges of the steel decking only. Fasteners shall be inserted to penetrate only the top ridges of the steel roof support decking.

© 2023 RH2 Engineering, Inc.

Finishes

The Owner shall select the roofing color from manufacturer's standard offering of not less than 15 colors. Color options shall be provided with the submitted shop drawings.

Part 3 – Execution

Examination

Verify that work of other trades which penetrates the roof deck, or requires workers and equipment to traverse roof deck, has been completed.

Examine surfaces for inadequate anchorage, foreign material, moisture, and unevenness which will prevent the execution and quality of application of roofing system as specified. Do not proceed with application of roofing until these defects are corrected.

Preparation

Provide temporary roof during inclement weather. Requests for use of alternate structural and/or base materials with superior weathering resistance, if approved by the Engineer, may be made in lieu of temporary roof replacement. Submit a description of each temporary roof system or alternate material schedule proposed.

Provide special protection from heavy traffic on completed work. Restore to original condition, or replace work or materials damaged during handling of roofing materials.

Installation

Apply roofing felt below waterproof roof paneling, single-ply, lapped shingle fashion, 3-inch head laps and 6-inch side laps. Install no more roofing felt than can be covered by metal roofing in the same day. Roof underlayment shall be dry and free of defects prior to the installation of metal roofing.

Apply ice and water shield to manufacturer's requirements.

Apply roofing only in dry weather and when the ambient temperature is above 40 degrees Fahrenheit.

Except as otherwise shown or specified, comply with recommendations and instructions of metal roofing manufacturer.

Form and fabricate sheets, seams, strips, cleats, clips, hips, ridges, edge treatments, integral flashings, and other components of specified metal roofing to profiles, patterns, and drainage arrangement shown, and as required for permanent leak-proof construction. Provide for thermal expansion and contraction of work caused by ambient air temperature difference of 100 degrees Fahrenheit.

All openings shall be sealed from weather and to prevent recessed areas that may attract nesting animals. Panel corrugations shall be sealed with the manufacturer's standard closed cell neoprene blocks conforming to the panel corrugation. Gaps created between corrugations and flashings shall be avoided whenever possible. Where such gaps occur, they shall be sealed with manufacturer's low pitch closures, or equal. All closures shall be installed as close to the face of the opening as possible to minimize any recessed areas.

Provide uniform, neat seams with no exposure of sealant to ultraviolet light.

© 2023 RH2 Engineering, Inc.

Flashing with a drip edge shall be installed on all edges, corners and angle points. Unless otherwise noted on the Plans extend roofing and flashing below fascia with drip edge hanging below wood supports and fascia. Valley gutters shall be provided at all valleys.

Field Quality Control

Metal roofing and its flashing shall be weather-tight. Exposed surfaces shall be free of dents, scratches, abrasions, or other visible defects.

Construction and fabrication of metal roofing shall comply with Sheet Metal and Air Conditioning Contractors National Association (SMACNA) recommendations for fabrication and construction of details, expansion joints, and installation procedures, except as shown or specified.

Fabricate and install work true and accurate with lines and corners of exposed metal units. Form exposed faces and starter sections of seams flat and free of buckles, excessive waves, and avoidable tool marks considering temper and finish of metal. Hold-down attachments for roof shall be designed and spaced to resist uplift pressure due to Basic Wind Speed and Exposure as identified in the General Notes. Provide uniform, neat seams without tool marks or irregularities.

7.61.13 Standing Seam Sheet Metal Roofing

[CSI 07 61 13]

Part 2 – Products

Materials

Preformed metal roof paneling shall be equal to *Design Span HP as manufactured by AEP Span* or *Custom Bilt Metals, SL-1750 Snap-Lock Roof Panel.* The metal roofing system shall consist of 24-gaugefactory-formed, pre-finished panels with major ribs not less than 1⅝-inch in height.

Shop-fabricate metal in conformance with manufacturer's pattern specifications to result in a minimum 1-inch effective water dam height on both edges. Standing seam interval shall not exceed 16 inches with no stiffening ribs.

Edges, hips, valleys, eaves, rakes, and miscellaneous flashing shall be finished with matching pre-finished pieces of 24-gauge minimum, to form a weather-tight roofing system.

Roofing panels shall be factory-prefabricated in accordance with manufacturer's standard pattern and design.

Finishes

Color options shall be provided with the submitted shop drawings. All panels and flashing shall be treated with a protective coating of Zincalume conforming to ASTM 792, AZ50, with factory-applied paint finish of Kynar 500 or Hylar 5000 with a total dry film thickness of 1 Mil. Reverse face shall be protected by a wash coat or primer.

© 2023 RH2 Engineering, Inc.

Part 3 – Execution

Installation

Panels shall be held down to the structure with concealed clips and fasteners. The fastening schedule shall be designed by the manufacturer to resist the loads identified in the General Notes. System shall extend to full extent of fascia boards and include a drip edge unless otherwise noted on the Plans. Extend panels from eaves to ridge in one piece.

All final hand turning of seams at joints and junctions is to be of the same quality as the machine-produced seams. Practices and techniques described in the SMACNA Architectural Sheet Metal Manual are to be used as the standard of practice unless otherwise specified or shown on the Plans.

7.62 Sheet Metal Flashing and Trim

[CSI 07 62 00]

Part 1 – General

Flashing shall be factory coated steel equal to *Construction Metals Inc. Professional Grade Flashing*. Gauge shall match flashing to be replaced or 26-guage minimum. Width shall match existing to be replaced. Provide color choices to Owner for approval. Minimum color choices are 10.

Part 3 – Execution

Installation

Install drip tight per manufacturer's requirements.

7.70 ROOF AND WALL SPECIALTIES

[CSI 07 70 00]

7.72 Roof Accessories

[CSI 07 72 00]

7.72.05 Common Work for Roof and Wall Specialties

[CSI 07 72 05]

Part 1 – General

Design Criteria

Attic ventilation shall be installed in accordance with IBC 1203. Contractor shall certify in writing that attic ventilation meets the IBC specification during the submittal process.

© 2023 RH2 Engineering, Inc.

Part 3 – Execution

Installation

Blocking shall be installed on all exterior eaves. Ventilation baffles shall be provided at all eave vents that provide a 1-inch minimum air gap between the attic insulation and the roof sheathing. Gable end vents or roof vents shall be provided.

7.90 JOINT PROTECTION

[CSI 07 90 00]

7.92.13 Elastomeric Joint Sealants

[CSI 07 92 13]

Part 1 – General

Submittals

Submit schedule for caulk used on the project for approval prior to application.

Part 2 – Products

Materials

Kitchen, Bath, Laboratory, and Other Wet Areas

DAP® KWIK SEAL PLUS® Premium Kitchen & Bath Adhesive Caulk w/MICROBAN® or equal.

Concrete and Masonry

DAP® Premium Polyurethane Concrete & Masonry Sealant or equal.

Wood or Concrete Board Siding

DAP® ALEX PLUS® Acrylic Latex Caulk Plus Silicone or equal.

Doors and Windows

DAP® DYNAFLEX 230® Premium Elastomeric Sealant or equal. Where necessary to provide a suitable backstop and bond breaker, tightly pack with polyethylene foam. Rope the back of grooves, leaving a minimum depth of ¼-inch for sealant. Prime surfaces as recommended by manufacturer.

Other Surfaces

Contractor shall provide caulk appropriate to surface and reason for caulk application. Caulk shall be the most durable available (longest warranty) by DAP®, or equal.

Part 3 – Execution

Installation

Caulk all joints and spaces necessary to provide a completely weather-tight product.

© 2023 RH2 Engineering, Inc.

Apply caulking in strict accordance with manufacturer's directions with regard to temperature at application and curing times, surface condition, moisture, and cleanliness.

Apply after surfacing prime and prior to final coatings if surface is to be coated. If surface will not be coated, provide color choices to the Owner for approval prior to application.

Clean all adjoining surfaces of excess sealant, smears, or marking due to application and leave joints with neat, uniformly-filled surfaces.

© 2023 RH2 Engineering, Inc.

8.00 GENERAL

Sections in these specifications titled "*Common Work for . . .*" apply to all following subsections whether directly referenced or not.

8.05 Common Work for Openings

[CSI 08 05 00]

Part 1 – General

Summary

This division covers furnishing all labor, materials, and equipment necessary for providing all interior and exterior doors, frames, and windows.

Related Sections

- Division 5.05.23 Bolts and Other Connectors

Submittals

Submittal information shall be provided to the Owner for the following items:

- Doors
- Skylights
- Hatches
- Hardware
- Locks
- Keys

8.06 Schedules for Openings

[CSI 08 06 00]

See the contract Plans for schedule of doors and windows.

8.10 DOORS AND FRAMES

[CSI 08 10 00]

8.10.05 Common Work for Doors and Frames

[CSI 08 10 05]

© 2023 RH2 Engineering, Inc.

Part 1 – General

Summary

This specification covers the doors, frames, accessories, and hardware for both interior and exterior man doors.

Related Sections

1.52.20 Locks and Keys

Submittals

Submittal information shall include the following:

Manufacturer's product data and installation instructions for each type of door, frame, accessory, or hardware. Include both published data and any specific data prepared for this project.

Door and frame shop drawing for approval prior to fabrication. Include detailed plans, elevations, details of framing members, required clearances, anchors, and accessories. Include relationship with adjacent materials.

As requested by the Engineer, provide sample color chips representing specified colors and finishes.

Performance Requirements

Doors between rooms requiring a fire separation shall have a listed fire rating equal to or greater than the required room fire rating. See Plans for which rooms are required to be separated with a fire door. Doors and frames shall be listed and labeled for a minimum of 45 minutes.

Doors between rooms requiring an acoustical separation (soundproof or sound rated door) shall have a minimum STC rating of 45.

All exterior doors and frames shall be insulated for a maximum U-value of 0.60.

Quality Assurance

The manufacturer(s) shall be a minimum of ten (10) continuous years documented experience specializing in the manufacturing of doors, frames, accessories, and/or hardware of the type required for this project. At the request of the Engineer, the manufacturer shall provide testing and/or certification information demonstrating that the manufacturer shall design and construct all equipment to the latest applicable codes and standards. The manufacturer or their representative shall be available for consultation to all parties engaged in the project, including instruction to installation personnel.

Scheduling

The Contractor shall ensure that all approvals and/or shop drawings are supplied or returned to the manufacturer in time for fabrication without affecting construction progress schedule. In addition, they shall ensure that templates and/or actual hardware requested by manufacturer are available in time for fabrication without affecting construction progress schedule.

© 2023 RH2 Engineering, Inc.

Warranty

The Manufacturer shall provide a one (1) year warranty against defects in workmanship and materials, including warping, rotting, decaying or bowing. The Installer shall warrant installation procedures and performance for a minimum of two (2) years from the point of substantial completion against defects due to workmanship and materials handling.

Part 2 – Products

Components

Provide doors, frames, and accessories as noted on the Door Schedule. Provide door hardware as specified, as noted on the Door Schedule, and as required by the local building code.

Contractor shall provide weather tight trim around all doors whether shown on the Plans or not.

The frames shall be furnished with sufficient wall and head anchors to secure the jamb and door against all operating, wind, and seismic loads. Exterior door frames shall have an integral weather-strip at head and jambs. Frames shall be trimmed in the field to form a weather tight seal if shown on the Plans or not.

Accessories

Provide door accessories as noted on the Door Schedule.

Hinges shall provide 180-degree rotation of the door. Hinges which are exposed at building exterior shall be equipped with tamper-proof pins that cannot be removed. Hinges exposed at the interior of the building shall be removable. The manufacturer shall provide door stops; no screw-on stops will be accepted.

Finishes

Prime doors and frames at the factory according to requirements for metals in Division 9.

Finishes shall be per the appropriate metal finishes in Division 9.

Part 3 – Execution

Installation

Install doors and frames in accordance with manufacturer's instructions and approved shop drawings; set frames plumb, square, level, and aligned to receive doors. Anchor frames to adjacent construction in strict accordance with recommendations and approved shop drawings and within tolerances specified in manufacturer's instructions. Seal metal-to-metal joints between framing members using good quality elastomeric sealant, and all doorjambs with caulking as specified.

Reinforce hinge and lock areas. Mount door using minimum of three (3) hinges.

Hang door in the frames and apply hardware in a neat, secure manner so that the doors will operate without dragging or binding.

© 2023 RH2 Engineering, Inc.

Cleaning/Repair

Upon completion of installation, thoroughly clean door and frame surfaces in accordance with AAMA 609. Do not use abrasive, caustic, or acid cleaning agents.

Protect products of this section from damage caused by subsequent construction until substantial completion. If damage does occur, Contractor shall repair damaged or defective products to original specified condition in accordance with manufacturer's recommendations. Replace damaged or defective products that cannot be repaired to Owner's acceptance.

8.11 Metal Doors and Frames

[CSI 08 11 00]

8.11.13 Hollow Metal Doors and Frames

[CSI 08 11 13]

Part 2 – Products

Components

Doors and frames shall comply with ANSI/SDI A250.8 for level and model and A250.4 for physical performance level. All doors shall be 1¾-inch thick and insulated with a solid polyurethane or urethane foam core. Exterior doors shall be Level 3 and Physical Performance Level A (Extra Heavy Duty), Model 2 (Seamless) and fabricated from 16 gauge steel minimum. Interior doors shall be Level 2 and Physical Performance Level B (Heavy Duty), Model 1 (Full Flush) and fabricated from 18 gauge steel minimum.

Door frames shall be 14-gauge galvanized steel, as manufactured or recommended by the door supplier specifically for the door installed. Frames shall be furnished with sufficient wall and head anchors to secure the jamb and door against all operating, wind, and seismic loads.

Alternatively, door frames installed within CMU walls can be 16-gauge galvanized steel, tied to the CMU with masonry wire clips. Fully grout CMU block within one length of a full-sized block measured from door frame.

8.30 SPECIALTY DOORS

[CSI 08 30 00]

8.31 Access Doors and Panels

[CSI 08 31 00]

8.31.20 Vault Hatches

[CSI 08 31 20]

Part 1 – General

Summary

Access hatches shall be of the dimensions and type shown on the project Plans.

© 2023 RH2 Engineering, Inc.

Related Sections

1.52.20 Locks and Keys

Performance Requirements

Access doors located in sidewalks or off regularly traveled path areas shall be rated for H-20 (AASHTO) loading.

Access openings shall not have any obstructions such as intermediate hatch support beams.

Submittals

Provide manufacturer's statement of load rating.

For aluminum frames to be cast in concrete, provide submittal for frame coating.

Locate gutter drain outlet location and routing of drain line to its intended location.

Finishes

Aluminum hatch frames shall be protectively coated prior to casting in concrete to prevent the accelerated corrosion that occurs when aluminum is in contact with concrete.

Warranty

Manufacturer shall guarantee against defects in material or workmanship for a period of five years.

Part 2 – Products

Manufacturers

Hatches shall be equal to USF Fabrications, Bilco, Halliday or LW Products.

Components

Access hatches shall have aluminum diamond plate door leaf (or leaves), stainless steel spring lift, neoprene weather seal, stainless steel hardware, self-latching stainless-steel slam lock, and recessed padlock hasp with cover. An unkeyed internal lever shall open the latch to prevent accidental entrapment. Any drainage provision provided by the hatch or frame shall be routed to the vault or building sump or drain system using Sch 40 PVC anchored to the walls and ceiling unless shown otherwise on the plans.

Frame shall be channel style with a full anchor flange around the perimeter and shall allow for controlled water drainage away from the opening.

Compression spring operator lift system enclosed in telescopic tubes, expansion spring, or torsion springs shall be provided for smooth, easy and controlled door operation throughout the entire arc of opening and closing. Operation shall not be affected by temperature. The door shall automatically lock in the vertical position by means of a heavy steel hold-open arm with release handle.

Part 3 – Execution

Installation

Installation shall be in accordance with manufacturer's instructions.

© 2023 RH2 Engineering, Inc.

Hatch gutter drain shall be connected to 2.5-inch or larger Schedule 40 PVC pipe and routed to daylight or storm drain unless shown otherwise on the plans.

Field Quality Control

Frame shall be installed square and true without binding of door throughout the full arc of travel. Mis-operation of door shall be corrected by the Contractor.

8.31.24 Building Roof Hatch

[CSI 08 31 24 or 07 72 33]

Part 1 – General

Roof Hatches shall be equal to Acudor.

Part 2 – Products

Hatches shall have stainless steel hardware and curb mounting unit compatible with the metal roof and roof sheathing. Cover shall be aluminum with EPDM seal gasket. Curb shall be aluminum. Finish shall be aluminum mill finish. Provide door latch with interior padlock provision.

Part 3 – Execution

Install units in strict conformance with manufacturer's recommendations. Provide and install all materials necessary for a water tight construction.

8.33 Coiling Doors and Grilles

[CSI 08 33 00]

8.70 HARDWARE

[CSI 08 70 00]

8.71 Door Hardware

[CSI 08 71 00]

8.71.05 Common Work for Door Hardware

[CSI 08 71 05]

Part 1 – General

Summary

This specification covers door hardware for interior and exterior doors. The Contractor shall provide all hardware necessary to install doors in a secure, weather-tight manner. Unless otherwise specified, all door hardware shall be according to this section.

Related Sections

1.52.20 Locks and Keys

© 2023 RH2 Engineering, Inc.

Submittals

Door hardware submittal information shall indicate that hardware is suitable for fire- and sound-rated applications, where applicable.

Performance Requirements

All door hardware shall be selected to meet local building and fire codes.

Part 2 – Products

Components

Key cylinders shall utilize the Owner's standard core and key. The key cylinder shall fit all exterior locking hardware and shall automatically lock when the door is closed. A vandal-resistant cover plate shall be provided at exterior surface of doors to prevent exterior access to deadbolts or slam latches at gap between door and frame.

All exterior, and fire- and sound- rated doors and frames shall have perimeter gasketing. Weather stripping shall consist of a vinyl, neoprene, or sponge neoprene strip mounted on an aluminum or stainless steel bracket which is fastened to the door or frame. Gasketing shall be Pemko or equal.

8.71.20 Hardware for Man-Doors

[CSI 08 71 20]

Part 2 – Products

Accessories

Dead Bolt: Doors with dead bolt locks shall use a 1-inch bolt throw, with concealed mounting screws, and a satin chrome finish. The dead bolt shall be thrown or retracted by a key on the outside and by a thumb knob on the inside. The dead bolt shall be equal to Schlage.

Interior Door Locksets

Interior doorknobs shall have a 2¾-inch backset with lever-style design.

Interior doorknobs shall have brushed stainless steel finish, or equal.

Interior doorknobs shall be ANSI A156.2 Series 4000 Grade 1, Schlage or equal.

Exterior Door Lockset

Entrance Lock (Non-Emergency Exit): Non-emergency, exterior doors shall have an entrance lock (ANSI F20) with 3-inch-wide by 16-inch-high raised plate and rectangular pull with thumbpiece and deadbolt key cylinder hole on the exterior, and a lever and deadbolt thumbturn on the inside. The latchbolt shall be retracted by the thumbpiece/lever from either side. When locked, the outside key or inside knob/lever shall retract the deadbolt and latchbolt simultaneously. The outside knob/lever remains locked until the thumbturn is restored to vertical position. Throwing the deadbolt shall automatically lock outside knob/lever. The inside lever shall always be free for immediate egress.

© 2023 RH2 Engineering, Inc.

- Key cylinders shall be interchangeable and compatible with the Owner's preferred cylinder.
- Exterior doorknobs shall have brushed stainless steel finish, or equal.
- Exterior doorknobs shall be ANSI A156.13 Series 1000 Grade 1, Schlage or equal.

Closers: Door closers shall be provided for exterior doors, fire-rated doors, restroom, and locker room doors, and elsewhere as shown in the Door Schedule on the Plans. Door closers shall be surface mounted, parallel-arm type with an aluminum or stainless steel finish. Door closers shall be Dorma 8600 or equal. Closer shall be UL-listed for fire door rating.

Push/Pull Plates: The inactive door on a double door shall be equipped with push/pull hardware. The pull hardware shall be the rectangular pull style mounted on a 3-inch-wide by 16-inch-high plate. The push plate shall be 3-inches wide by 16-inches high. Push/pull hardware shall be fabricated from stainless steel. Doors with push/pull hardware shall be equipped with closer.

Door Hinges: Door hinges shall be fabricated using polished and stainless steel and shall be equipped with permanently lubricated ball bearings. Hinges shall provide 180-degree rotation of the door. Hinges which are exposed at building exterior shall be equipped with tamper-proof pins that cannot be removed. Hinges exposed at the interior of the building shall be removable.

Thresholds: All interior and exterior doors shall have an extruded aluminum threshold. Thresholds shall be Pemko or equal.

Door Bottoms: All sound rated doors shall have a non-handed full-mortise automatic door bottom with neoprene seal that is fire and sound rated. Automatic door bottom shall be Pemko 434ANBL or equal. All exterior and fire rated doors shall have vinyl or neoprene door-shoe or door-bottom sweep, Pemko or equal.

Astragals: Provide flush extension bolts at the top and bottom of inactive double doors. Equip inactive doors with an overlapping astragal constructed of similar material to door. Astragals shall be Pemko or equal.

Door Stops: All doors shall have a doorstop and holder fabricated from aluminum or stainless steel. Strike shall be wall- or floor-mounted and provide automatic doorstop and hold with quick release. Doorstop for interior doors shall be a wall-mounted concave rubber bumper with a stainless steel or aluminum mounting plate.

Coordinator: All double doors shall have a coordinator to restrict the closing of one door before the other so that they close and lock properly. If not shown on the plans, Owner shall select which double door will be the primary and secondary door during the submittal stage of the project.

Rain Drip: All exterior doors shall be equipped with an aluminum door-top rain-drip weather strip, mounted to the top edge of the door frame to prevent water intrusion. Rain drips shall be Pemko or equal.

Finishes

All hardware shall have the same finish and shall be satin nickel.

© 2023 RH2 Engineering, Inc.

8.90 LOUVERS AND VENTS

[CSI 08 90 00]

8.90.05 Common Work for Louvers and Vents

[CSI 08 90 05]

Part 1 – General

Related Sections

- Division 17.08 - HVAC Functional Control

System Description

Ventilator shall be provided with explosion proof motors if noted in the Plans.

Design and Performance Requirements

See Louver and Damper Schedule on Plans and Functional Control description for design and performance requirements.

Submittals

Submit detailed product information including specifications, sizing information, dimensional drawings, coating systems, and available colors, and other information relevant to this project.

Part 2 – Products

Manufacturers

The following manufacturers are considered to be acceptable "or equals" unless otherwise noted on the Plans or elsewhere herein.

- Pottorff
- Cesco
- Louvers & Dampers, Inc.

Accessories

Provide all accessories needed for a complete installation including wall and roof thimbles, backguards, and mounting sleeves.

Components

A filter frame and an insect screen shall be provided on the interior side of all intake louvers. The filter frame shall allow for easy installation and removal of standard size filters. Provide one set of filters.

A rodent/bird mesh shall be provided on the exterior side of all louvers. Mesh shall not impede rotation of dampers, if any. Mesh shall be factory coated to match louver/damper color. The screen shall be corrosion resistant with maximum ¼-inch openings.

© 2023 RH2 Engineering, Inc.

Finishes

All louvers shall be coated with factory Kynar, or powder coat finish, color to match exterior color scheme.

Part 3 – Execution

Install per manufacturer's recommendations.

Louver assembly shall be set flush with the wall exterior

Operate all moving parts prior to installation. Any non-functional or binding parts shall be repaired or replaced prior to installation. Install so that blade linkages are accessible after installation to permit service and lubrication without requiring removal of wallboard or other structures.

8.91 Louvers

[CSI 08 91 00]

8.91.13 Motorized Wall Louvers

[CSI 08 91 13]

Part 2 – Products

Components

If automatic controlled operation, blades shall be adjustable from fully open to fully closed via a 120VAC motor actuator sized appropriately to operate the damper fully. Blades shall seal with neoprene or vinyl seals. Blades shall pivot on bronze or nylon bushings, or steel bearings. Contractor shall verify compatibility of damper to actuator. Motor actuator if any, shall be side mounted, out of the air stream. Motor actuator shall be located no lower than 6-inches above floor level. Provide disconnect switch for each unit (where applicable).

8.91.19 Fixed Louver

[CSI 08 91 19]

Part 1 – General

Provide fixed louver(s) as shown on the Plans.

Part 2 – Products

Components

Louver shall include channel frame mounted to the inside face of the wall.

Height and width of louver and damper shall be as shown on the Plans. Depth of louver, filter, and screen assembly shall be set flush with the wall exterior and any intrusion into the interior wall supported by the frame.

© 2023 RH2 Engineering, Inc.

9.00 GENERAL

This division covers work necessary for providing all materials, equipment, and labor to coat all items in accordance with these specifications.

Sections in these specifications titled *"Common Work for . . ."* apply to all following subsections whether directly referenced or not.

9.20 PLASTER AND GYPSUM BOARD

[CSI 09 20 00]

9.21.23 Gypsum Board for Low Occupancy Areas

[CSI 09 21 23]

Part 1 – General

Summary

This section covers work within infrequently occupied facilities, process, or industrial buildings. This section includes the following areas:

1. Pump Room

Related Sections

- Division 9.21.21 Gypsum Board for High Occupancy Areas
- Division 9.91.23.10 Interior Painting – Gypsum Wallboard

Part 2 – Products

Components

Gypsum board shall be selected based on the installed application (see below) and as recommended by the Gypsum Association GA-223-96. Gypsum board shall be ⅝-inch thick, unless otherwise noted.

Type	Application	ASTM
Regular	Interior Walls and Ceilings	C1396
Type Xor C	Fire-Rated Construction	C1396
Soffit Board	Exterior Soffits and Ceilings	C931
Water-Resistant Gypsum Backing Board	Tile Base	C630

Joint treatment: U.S. Gypsum Company Perm-a-Tape or equivalent. Protect exposed corners with U.S. Gypsum Company Perm-a-Tape or equivalent moldings embedded in joint compound per manufacturer's recommendations.

© 2023 RH2 Engineering, Inc.

Finishes

Finish-sand all areas to smooth, even surfaces suitable for paintings.

Part 3 – Execution

Installation

Provide and install all necessary components, including furring, as necessary to install gypsum board in accordance with local building code and Gypsum Associations standards (GA-216 and GA-600). Install gypsum board as needed to maintain fire and sound transmission rating.

Apply square edge with the long dimension parallel with supports. Abut sides and edges to vertical framing members, top and bottom plates, or headers. Attach using nails spaced at 8 inches O.C. at all edges, and 8 inches O.C. on intermediate support.

9.90 PAINTING AND COATING

[CSI 09 90 00]

9.90.05 Common Work for Painting and Coating

[CSI 09 90 05]

Scope

The work specified in this Section covers the furnishing and installation of protective coating, complete in place. Shop coating and/or factory applied finishes on manufactured or fabricated items may be specified elsewhere. Regardless of the number of coats previously applied, at least two coats of paint shall be applied in the field to all coated surfaces unless otherwise specified herein.

Submittals

Before beginning any painting or coating, submit a list of coatings and manufacturers for review by the Owner. Include the application each coating is intended for, any surface preparation, number of coats, method of application, and coating thickness.

Provide color choices with physical cards prepared by the coating manufacturer. Electronic (PDF, jpg, etc.) charts, and charts made from office printers or copiers are not acceptable. If the Owner elects to make preliminary selection from an electronic or printed chart, the Contractor must provide physical samples of the colors selected for the Owner's approval.

Provide Safety Data Sheets (SDS) for all materials including solvents. Provide NSF certification for finishes in potential contact with potable water. Submit this information according to the requirements regarding shop drawings included herein.

Provide a schedule of coating operations and inspection timing. Coating inspections will be scheduled based upon Contractor-provided schedule, update schedule weekly or as necessary.

Provide manufacturer's approval of coating system applicator.

If submitted products are manufactured by a company other than the specified reference standard, provide complete comparison to specified projects including application procedures, coverage rates, and verification that product is appropriate for intended use. Provide

© 2023 RH2 Engineering, Inc.

information that demonstrates the submitted products are equal to the performance standards of products manufactured by Tnemec Corporation, which is the reference standard.

Performance Requirements

All finishes potentially in contact with potable water shall be National Sanitation Foundation (NSF) 61 or 600 certified for contact with potable water. Certification from the NSF or UL shall be supplied in writing at the time of the submittal process for Finishes. Verify the submitted coatings' current NSF requirements, restrictions, and applicability to the coated items. Verify finishes used on the project are compliant with primary and secondary standards of the Safe Drinking Water Act. Any violation shall be remedied at the Contractor's expense.

The completed coating shall produce a minimum dry film thickness in accordance with the specifications as determined by the microtest thickness gauge or comparable instrument. In areas where this thickness is not developed, sufficient additional coats shall be applied to produce it.

Quality Assurance

The Contractor is responsible for compatibility of all shop and field applied paint products including the use of primer, intermediate, and top coats by different manufacturers if applicable. For any Contractor initiated substitutions, the Contractor shall verify complete compatibility between coatings provided for the project. If coatings are not compatible per manufacturer's review it is the Contractor's responsibility to remove incompatible coatings fully and replace with compatible coating systems.

Paint used in the first field coat over shop painted or previously painted surfaces shall cause no wrinkling, lifting, or other damage to the underlying paint.

The Contractor is responsible for obtaining written documentation from equipment/material manufacturers regarding the date at which shop prime coatings are applied and shall strictly adhere to the coating manufacturer's recommendations for recoat time intervals. The Contractor shall submit to the Owner such documentation upon request.

Storage and Handling

Bring all materials to the job site in the original sealed and labeled containers of the paint manufacturer. Materials are subject to inspection by the Owner. Store paint supplies as recommended by the manufacturer and as approved by the Owner.

Extra Materials

Waste Products

Collect, contain, transport, and dispose all waste products generated for this project. Cleaning and disposal shall comply with all federal, state, and local pollution control laws. Provide acceptable containers for collection and disposal of waste materials, debris, and rubbish.

Cleaning and disposal shall comply with all federal, state, and local pollution control laws. Provide appropriate containers for collection and disposal of waste, debris, and rubbish.

© 2023 RH2 Engineering, Inc.

Part 2 – Products

Manufacturers

The following coating system manufacturers are approved subject to compliance with the Specifications contained herein:

1. Tnemec Company
2. Sherwin Williams

The specified coating establishes the type and quality of the coating desired. Other manufacturers' products will be accepted provided sufficient information is submitted to allow the Owner to determine that the coatings proposed are equivalent to those named. Proposed coating shall be submitted for review in accordance with Division 1. Requests for review of equivalency will not be accepted from anyone except the Contractor.

Substitutions of the coatings of other manufacturers will be considered only if equivalent systems of coatings can be provided and only if a record of satisfactory experience with the system in equivalent applications is available. Offers for substitutions will not be considered which decrease film thickness, solids by volume or the number of coats to be applied, or which propose a change from the generic type of coating specified herein. All substitutions shall include complete test reports to prove compliance with specified performance criteria.

Part 3 – Execution

Preparation

Take any measures necessary to prevent over-spray of structures and/or components in the field from both preparation and coating work. Should over-spray occur, the Contractor is responsible for all costs associated with any damage resulting from over-spray.

Installers

Contractor is responsible for quality assurance including the retention of a coating applicator with experience necessary to complete the work as specified. Applicator's personnel shall be adequately trained for application of specified coatings. Applicator must prove adequate experience with the coatings specified for this project.

Examination

The Owner shall inspect and approve all surface preparations prior to application of any coating. Provide 24-hour notice prior to surface inspection needs.

Preparation

Prepare surfaces in accordance with the recommendations of the manufacturer of the coating to be applied to the surface, or the surface preparation requirements of these specifications, whichever are stricter. In general, all surface preparation shall meet Structural Steel Painting Council (SSPC) Surfacing Preparation (SP) guidelines, the National Association of Pipe Fitters (NAPF), American Water Works Association (AWWA) and/or the National Association of Corrosion Engineers (NACE) as noted herein unless more strictly described by coating manufacturer.

© 2023 RH2 Engineering, Inc.

Apply coatings only during weather meeting the coating manufacturer's recommendations. Air and surface temperatures, humidity, and all other environmental conditions shall be within limits prescribed by the manufacturer for the coating being applied, and work areas shall be reasonably free of airborne dust at the time of application and while coating is drying.

Materials shall be mixed, thinned, and applied according to the manufacturer's printed instructions. Dry Film Thickness (DFT) shall be as stated herein or applied based on coverage rates of square feet per gallon (sq. ft./gal).

Installation/Construction

Apply paint in strict accordance with manufacturer's printed instructions except that coating thickness specified herein shall govern. Finished coating on all items shall be clean, undamaged, and of uniform thickness and color.

Coat in a manner satisfactory to the Owner. The DFT listed in these specifications must be met, regardless of the applied film thickness or number of coats.

Observe all safety precautions stated in the manufacturer's printed instructions. Provide adequate ventilation and lighting at all times.

The manufacturer's recommended drying time shall be construed to mean "under normal conditions". Where conditions are other than normal because of weather, confined spaces, or other reason, longer drying times may be necessary. The manufacturer's recommendation for recoating time intervals shall be strictly adhered to.

Pipe being coated shall be emptied of water for a minimum of 24 hours prior to surface preparation and painting. Pipe shall not be filled with water until coating is dry. If, in the Owner's opinion it is not practical to drain the pipe, the water must stand for at least 48 hours to reach ambient temperature prior to coating the pipe. Do not allow water to flow for at least 24 hours after each coat.

Field Quality Control

The prime Contractor shall be completely responsible for coating quality. The Contractor shall provide both wet and dry film gauges and make such available to the Owner when requested.

If coating inspector finds anomalies and/or defects, the Contractor shall re-prep and recoat those areas per the coating manufacturer's instructions.

Acceptance of the completed coatings shall be based on the proper application and proper preparation of the coated surfaces, and a finished product that meets minimum thickness and does not contain runs, drips, surface irregularities, overspray, color variations, scratches, pinholes, holidays, and other surface signs that detract from the overall performance and/or appearance of the finished project.

If, in the Owner's sole opinion, the finished color of exterior coatings does not match that of the submitted and approved colors, the Contractor will recoat as necessary to achieve the approved color at no additional cost to the Owner.

© 2023 RH2 Engineering, Inc.

Inspection

For metals exposed to exterior atmospheric conditions, first coat of paint or primer must be placed within four hours of passing inspection. Bare steel must be reblasted and reinspected if not successfully coated within this four-hour time frame, at the Contractor's expense.

Use the Pictorial Surface Preparation Standards for Painting Steel Surfaces (VIS-1) by the Steel Structures Painting Council (SSPC) as a visual standard for inspection of surface preparation of metal surfaces. Test-Tex Tape may also be used to verify surface profile.

Inspect each coat prior to application of the next coat. Areas found to contain runs, overspray, roughness, streaks, laps, sags, or other signs of improper application shall be repaired or recoated in accordance with the manufacturer's recommendations. Finish coats shall be uniform in color and sheen. Surface preparations and coatings not inspected and approved by the Owner will be uncovered for inspection and approval at no additional cost to the Owner.

Repair/Restoration

The Contractor is responsible for all costs associated with any damage that occurs as a result of over-spray.

Scratched, chipped, or otherwise damaged coatings, including factory coatings, shall be repaired before final acceptance will be given.

Cleaning

If any cleaning of equipment at the site is performed with solvents, such work shall be done over leak-proof linings. Preparation or coating materials may not be disposed of onsite.

9.90.06 Product and Color Schedule

[CSI 09 06 90 or 09 90 06]

Colors of finish coatings on process equipment, piping, and building surfaces shall conform to the following schedule. All finishes shall be satin unless otherwise specified. Finish coatings, which are applied in the shop by the manufacturer, shall conform to this section. Factory coatings which are damaged shall be recoated in the field in accordance with these specifications.

Items of similar purpose shall be painted the same color. If items come from the factory with a shop applied coating that does not match said color, they shall be field coated to match. Exceptions may be listed in individual sections of these specifications.

The contractor shall allow no less than 15 working days from the time the Owner is provided with color selections for the Owner to make color choices.

The Owner will develop a color schedule for painted items after award of the contract. Provide a pallet of colors from the manufacturer of not less than 30 color choices.

© 2023 RH2 Engineering, Inc.

9.90.13 Unpainted Items

[CSI 09 90 13]

Part 1 – General

Summary

Do not coat the following items unless specifically directed otherwise in these specifications or on the Plans.

- Aluminum, plastic, or stainless-steel items.
- Brass and copper pipe, valves, and fittings for plumbing fixtures.
- Nameplates, labels, or identification tags.
- Sensors, switches, transmitters.

Field painting is not required for equipment listed below if they come with a factory finish epoxy, polyurethane, or powder coat. Items supplied with only a factory prime coat must be field coated.

- Motors
- Control valve pilot systems
- Valves
- Flow meters
- Electrical panels

9.91.13 Exterior or Damp Environment Painting

[CSI 09 91 13]

9.91.13.01 - System 1: Metals – Exterior and Wet Conditions including Doors, Windows, and Frames

[CSI 09 91 13 13]

Part 2 – Products

1. Tnemec
   a. Prime Coat: Series 27 Fast Cure Epoxy (3 to 5 Mil DFT)
   b. Finish Coat: Series 1095 EnduraShield (3 to 5 Mil DFT)
2. Sherwin Williams

   For products that are supplied in bare (unprimed) metal:

   a. Primer: Corothane 1 Galvapac Zinc Primer B65G11 (2.5 to 3.5 Mil DFT)
   b. Finish Coat: Acrolon 218HS B65-650 Series (3 to 5 Mil DFT)

© 2023 RH2 Engineering, Inc.

For products that are supplied with a shop prime coat:

a. Primer: Shop

b. Intermediate: Macropoxy 646FC B58-600 Series (5 to 8 Mil DFT)

c. Finish Coat: Acrolon 218HS B65-650 Series (3 to 5 Mil DFT)

Part 3 – Execution

Surface Preparation

1. Clean, dry, and free of all dirt, oil, grease, and other contaminants.
2. For new work: SSPC-SP1 solvent cleaned.
3. For coating over existing painted surfaces: Remove all loose and damaged coatings. Prepare with SSPC-SP2 hand tool or SP3 power tool cleaning.
4. All hollow metal doors, windows, and frames shall be bonderized, pickled, or phosphatized, which will serve as a primer for and shall be compatible with the finish coat to be applied in the field

9.91.13.10 - System 3: Wood – Exterior, Painted

[CSI 09 91 13 17]

Part 1 – General

Exterior wood surfaces, including, but not limited to trim, soffit, siding, and other similar surfaces.

Part 2 – Products

1. Tnemec
   a. Prime Coat:
      i. Rough or open grain wood: Series 115 Uni-Bond or 151-1051 Elasto-Grip (250 to 300 square feet per gallon)
      ii. Smooth wood: Series 115 Uni-Bond (250 to 300 square feet per gallon)
   b. Intermediate Coat: Series 1029 Enduratone (4 to 6 Mil DFT)
   c. Finish Coat: Series 156 EnviroCrete (4 to 6 Mil DFT)
2. Sherwin Williams
   a. Primer: Exterior Latex Wood Primer (250 to 300 square feet per gallon)
   b. Intermediate Coat: Loxon XP (4.0 to 6.0 Mil DFT)
   c. Finish Coat: Loxon XP (4.0 to 6.0 Mil DFT)

Part 3 – Execution

Surface Preparation

1. Surface clean, dry, and free of contaminates.

© 2023 RH2 Engineering, Inc.

9.91.13.12 - System 5: Metals - Metal in Contact with Concrete, Masonry or Dissimilar Metals.

[CSI 09 91 13 19]

Part 1 – General

This section applies to all non-submerged metal surfaces including aluminum, hot-dipped galvanized steel, or other metals, which are conducive to corrosion due to interaction of dissimilar metals or to chemical reaction due to embedment in concrete or masonry grout, and that are not covered as part of another coating system.

Part 2 – Products

1. Tnemec
    a. First Coat: Series N69 Hi-Build Epoxoline II (4 to 6 Mils DFT)
2. Sherwin Williams
    a. First Coat: 646 FC B58-600 Macropoxy (4 to 6 Mils DFT)

Part 3 – Execution

Surface Preparation

1. SSPC-SP1 Solvent Cleaning
2. Lightly sand to degloss and provide a surface profile.

9.91.13.13 - System 6: Ferrous Metal Pipe and Supports including Steel, Cast Iron, and Ductile Iron (Exposed Indoors and Outdoors).

[CSI 09 91 13 20]

Part 1 – General

This Section applies to all ductile/cast iron and ferrous metals, including bituminous coated pipe and materials unless specified otherwise. Do not coat stainless steel materials unless specified otherwise. This Section applies to all pipe materials and equipment, including manufacturer applied coating systems. For the purposes of this coating system, metals which are located below the top of the exterior wall within a water bearing structure or are located within a vault or manhole shall be considered as under immersion service conditions.

Part 2 – Products

1. Tnemec
    a. Primer: Series 1 Omnithane (2.5 to 3.5 Mil DFT).
    b. Intermediate Coat: Series N69 Hi-Build Epoxoline II (6 to 8 Mil DFT)
    c. Finish Coat: Series 73 or 1095 Endura-Shield (3 to 5 Mil DFT)

© 2023 RH2 Engineering, Inc.

2. Sherwin Williams
   a. Primer: Corothane 1 Mio-Zinc Primer (2.5 to 3.5 Mil DFT)
   b. Intermediate: Macropoxy 646FC B58-600 Series (6 to 8 Mil DFT)
   c. Finish:
      i. Indoors: Macropoxy 646FC B58-600 Series (6 to 8 Mil DFT)
      ii. Indoors/Outdoors: Acrolon Ultra B65-830 Series (2 to 3 Mil DFT)

Part 3 – Execution

Preparation

1. To prevent surface condensation, whenever possible the pipe should be empty and allowed to reach ambient temperature before coating. If condensation is present, dry thoroughly prior to coating.
2. Ferrous Metals
   a. SSPC-SP10 Near white blast cleaning
3. Ductile and Cast-Iron Materials
   a. It is strongly recommended that ductile iron and cast-iron pipe or materials to be field coated should be purchased factory primed without the standard asphalt coating. Field removal of asphalt coatings is extremely difficult and overly aggressive preparation can create a damaged surface unsuitable for coating.
   b. Remove all oils, grease, and other contaminants using solvent cleaning prior to abrasive blasting or power tool cleaning. Blemishes or staining on the prepared surface are acceptable if such items cannot be removed by light scraping with a knife. SSPC-SP10 blue-gray with surface profile of 2.0 Mil, minimum. Do not burnish the surface. Clean all surfaces of dust and loose residue immediately prior to coating. See NAPF 500-03-04/05.
4. Prepare and coat all exposed bolt heads, threads, washers, nuts, and tie rods with the same system as the pipe.

[CSI 09 91 13 21]

9.91.23 Interior Painting

[CSI 09 91 23]

9.91.23.01 – System 7: Metals Interior (Dry Conditions)

[CSI 09 91 23 13]

Part 1 – General

This Section applies to all interior metals located indoors, not factory coated and where the metal is not holding or in direct contact with a liquid and not exposed to weather.

© 2023 RH2 Engineering, Inc.

Materials

1. Tnemec
   a. Primer: Series 1 Omnithane Prime (2.5 to 3.5 Mil DFT)
   b. Finish Coat: Series N69 Epoxoline II (4 to 6 Mil DFT)
2. Sherwin Williams
   a. Primer: Corothane 1 Galvapac Primer B65G11 (2.5 to 3.5 Mil DFT)
   b. Finish: Macropoxy 646FC B58-600 Series (4 to 6 Mil DFT)

Part 3 – Execution

Surface Preparation

SSPC SP1 followed by SP6 (commercial blast). Surface profile shall be 2.0 Mil, minimum.

9.91.23.03 - System 8: Galvanized Metal Surface Repair

[CSI 09 91 23 14]

Part 1 – General

This Section applies to all galvanized surfaces which have received minor damage to the galvanized surface during construction and which require repair.

Part 2 – Products

1. Tnemec
   a. First Coat: Series 90-97 Tneme-Zinc (2.5 to 3.5 Mil DFT)
2. Sherwin-Williams
   a. First Coat: Corothane 1 Galvapac B65G11 (2.5 to 3.5 Mil)

Part 3 – Execution

Surface Preparation

1. SSPC-SP3 Power tool cleaning

9.91.23.04 – System 9: Galvanized Iron and Non-Ferrous Metal (non-immersion)

[CSI 09 91 23 15]

Part 2 – Products

Materials

1. Tnemec
   a. Two coats Series 30 Spra-Saf or 1029 Enduratone (2 to 4 Mil DFT each coat)

© 2023 RH2 Engineering, Inc.

2. Sherwin Williams
    a. Two coats Spraylastic B42 Series (2 to 4 Mil DFT each coat)

Part 3 – Execution

Preparation

Surface SSPC SP1 solvent clean.

9.91.23.10 - System 11: Gypsum Wallboard – Interior, Painted

[CSI 09 91 23 17]

Part 1 – General

1. Gypsum wallboard ceilings, walls, and other similar surfaces located in a conditioned environment (i.e. building).

Part 2 – Products

1. Tnemec
    a. Prime Coat: Series 151-1051 Elasto-Grip (180 to 400 square feet per gallon)
    b. Finish Coat: Series 113 Hi-Build Tneme-Tufcoat (4 to 6 Mil DFT)
2. Sherwin Williams
    a. Primer: PrepRite ProBlock Int/Ext Latex Primer Sealer B51 Series (180 – 200 square feet per gallon)
    b. Finish Coat: Pro-Industrial Water Based Catalyzed Epoxy B73 Series (4 to 6 Mil DFT)

Part 3 – Execution

Surface Preparation

Surface clean, dry and free of contaminates.

9.91.23.12 - System 13: Wood – Interior, Painted

[CSI 09 91 23 19]

Part 1 – General

Interior painted wood surfaces, including, but not limited to trim and other similar surfaces.

Part 2 – Products

1. Tnemec
    a. Primer: Series 115 Uni-Bond or 151-1051 Elasto-Grip (1.0 to 1.5 Mil DFT)
    b. Intermediate Coat: Series 1029 EnduraTone (2 to 4 Mil DFT)
    c. Finish Coat: Series 1029 EnduraTone (2 to 4 Mil DFT)

© 2023 RH2 Engineering, Inc.

2. Sherwin Williams
   a. Primer: PrepRite ProBlock Int/Ext Latex Primer Sealer B51 Series (1.0 to 1.5 Mil DFT)
   b. Intermediate Coat: Sher-Cryl HPA B66-350 Series(2 to 4 Mil DFT)
   c. Finish Coat: Sher-Cryl HPA B66-350 Series (2 to 4 Mil DFT)

Part 3 – Execution

Surface Preparation

Surface clean, dry and free of contaminates.

9.91.33 Submerged and Buried Metals Painting

[CSI 09 91 33 or 09 97 00]

9.91.33.01 - System 14: Metals in Contact with Drinking Water (Steel pipe, pump discharge head interior)

[CSI 09 91 33 13]

Part 1 – General

Summary

This section applies to metals in contact with potable drinking water.

References

Coatings shall be NSF 61 approved for use in direct contact with potable drinking water. The NSF 61 approval shall be appropriate for the application at the time of submittal. Contractor is responsible for verifying the current NSF 61 requirements and restrictions of submitted coating.

Part 2 – Products

Materials

1. Tnemec
   a. Valves ≥ 1½-inch diameter; Pipe ≥ 6-inch diameter; Tanks ≥ 25 gallons.
      i. Primer: None
      ii. Finish Coat: Series FC22 Epoxoline (16 to 20 Mil DFT)
   b. Fittings, Valves, & Pumps ≥ ½-inch diameter; Pipe ≥ 10-inch diameter; Tanks ≥ 50 gallons.
      i. Primer: None
      ii. Finish Coat: Series 22 or FC22 Epoxoline (either one coat at 16 to 20 Mil DFT or two coats at 12 to 16 Mil DFT each coat)

© 2023 RH2 Engineering, Inc.

c. Fittings, Valves, & Pumps ≥4-inch diameter; Pipe ≥18-inch diameter; Tanks ≥ 1,000 gallons.
   i. Primer: Series N140 Pota-Pox Plus or Series 141 Potapox 80 (6 to 8 Mil DFT)
   ii. Finish Coat: Series N140 Pota-Pox Plus or Series 141 Potapox 80 (6 to 8 Mil DFT)

2. Sherwin Williams (Pipes ≥6-inch diameter; Tanks ≥100 gallons)
   a. Primer: None
   b. Finish Coat: Sherplate PW (16 to 20 Mil DFT)

Part 3 – Execution

Surface Preparation

Ferrous Metal – SSPC SP1 followed by SP10 Near White Blast. Surface profile shall be 2.0 Mil, minimum.

Ductile Iron – SSPC SP1 followed by NAPF 500-03-04/05 Grey White Blast or SP10 Grey White Blast. Surface profile shall be 2.0 Mil, minimum.

9.91.33.05 - System 17: Buried or Submerged Ferrous Pipe

[CSI 09 97 13 30]

Part 2 – Products

Materials

Interior Lining

1. Option 1: Liquid Epoxy
   a. 9.91.33.01 Metals in Contact with Drinking Water, or
   b. AWWA C210
2. Option 2: Powder Coat or Fusion Bonded Epoxy
   a. 3M Scotchkote - fusion bonded epoxy (12 to 16 Mil DFT), or
   b. AWWA C213
3. Option 2: Cement mortar lining
   a. AWWA C205 or C602.

For interior coatings for potable water, or transport of raw water that will be treated to become potable water, provide documentation that product has NSF 61 certification for contact with drinking water.

© 2023 RH2 Engineering, Inc.

Exterior Coating

Exterior coating for pipe located below foundations. Does not include transmission and distribution mains.

1. Option 1: Tnemec
   a. Primer option 1: Series 1 Omnithane (2.5 to 3.5 Mil DFT).
   b. Primer option 2: Series N69 or N140 (2.5 to 3.5 Mil DFT) may be used if the time between prime coat and intermediate coat is less than 60 days. If more than 60 days occurs, surface will need re-preparation per the manufacturer's instructions.
   c. Finish Coat: Two coats of Series N69 Hi-Build Epoxoline II (6 to 8 Mil DFT each coat)
2. Option 2: Sherwin Williams
   a. Primer: Corothane 1 Mio-Zinc Primer (2.5 to 3.5 Mil DFT)
   b. Finish: Two coats of Macropoxy 646FC B58-600 Series (6 to 8 Mil DFT each coat)
3. Option 3: See transmission and distribution main options below.

Exterior coating for transmission and distribution mains.

1. Option 1: AWWA C203: Coal tar enamel, wrap, and finish system.
2. Option 2: AWWA C205: Reinforced cement mortar coating system.
3. Option 3: AWWA C214, C215, C216, C17: Multi-layer tape or polyolefin coating system.

Part 3 – Execution

Surface Preparation

1. SSPC-SP10 Near white blast cleaning, or
2. Per preparation methods described in the applicable AWWA product standard.

Application

All linings and coatings must be shop applied. Field applied tape systems may be allowed at fittings and valves at the discretion of the Engineer.

Repair

Repair any linings or coating where damage has removed 20-percent or more of the lining or coating thickness. Follow the manufacturer's instructions.

© 2023 RH2 Engineering, Inc.

9.97.23 Concrete and Masonry Coatings

[CSI 09 97 23]

Part 1 – General

Scheduling

Most coatings on concrete will require a 28-day concrete curing period prior to coating. Schedule the work accordingly. No additional monetary or time compensation will be given for failure to plan for the required curing duration.

9.97.23.05 – System 22: Concrete (Exterior below Grade Water-proofing) for clear well

[CSI 09 97 23 18 or 07 14 16]

Part 2 – Products

Materials

1. Tnemec
    a. Surface Filler: Series 218 MortarClad. Used as needed to fill bug holes and surface voids
    b. Primer: 27 WB Typoxy (4 to 6 Mil DFT)
    c. Finish: Series 264 ElastoShield (50 to 80 Mil DFT total)
2. Sherwin Williams
    a. Surfacer Filler: Steel Seam FT910. Used as needed to fill bug holes and surface voids.
    b. Primer: Hi-Mil Sher-Tar Epoxy. (8 to 12 Mil DFT)
    c. Finish: Sherwin Williams Hi-Mil Sher-Tar Epoxy. (8 to 12 Mil DFT)

Part 3 – Execution

Preparation

Surface Preparation

SP13 Abrasive Blasting of Concrete 4.3.1. Rock pockets ¼-inch diameter and larger filled.

© 2023 RH2 Engineering, Inc.

9.97.23.08 – System 25: Concrete Vault Exterior – Bottom and Walls

[CSI 09 97 23 20 or 07 14 16]

Part 2 – Products

Materials

1. Tnemec
    a. One coat: Series 46H-413 Hi-Build Tneme-Tar. (16 to 20 Mil DFT)
2. Sherwin Williams
    a. One coat: Hi-Mil Sher-Tar Epoxy. (16 to 20 Mil DFT)

Part 3 – Execution

Preparation

Allow 28-days cure time for concrete, or until passing the ASTM D 4263 Plastic Mat Test. Surface shall be clean, dry, and free of contaminants.

9.97.23.11 System 27A: Anti-Graffiti Coating and Water Repellent on CMU and Concrete Exterior

[CSI 09 97 23 21 or 09 96 23]

Part 1 – General

Summary

Exterior surface of above grade concrete and CMU walls. This coating system is intended to function as a clear water repellent and aid in the removal of graffiti.

Part 2 – Products

Materials

1. Tnemec
    a. First and Second Coat: 626 Dur A Pell GS
        i. CMU: 65 to 85 sq. ft./gallon each coat
        ii. Concrete: 150 to 200 sq. ft./gallon each coat
2. Sherwin Williams
    a. Anti-Graffiti Coating 1K
        i. CMU: Two coats 150-200 sq.ft./gallon each (first coat 10% reduced).
        ii. Concrete: One coat 150-200 sq.ft./gallon.

© 2023 RH2 Engineering, Inc.

Part 3 – Execution

Preparation

Surface must be clean, dry, and in sound condition. Remove all oil, dust, grease, dirt, loose rust, and other foreign material to ensure adequate adhesion. Refer to SSPC-SP13/NACE 6, or ICRI 03732, CSP 1-3. Concrete and mortar must be cured at least 28 days at 75 degrees Fahrenheit (24 degrees Celsius). Remove all loose mortar and foreign material. Surface must be free of laitance, concrete dust, dirt, form release agents, moisture curing membranes, loose cement and hardeners. Fill bug holes, air pockets and other voids with Cement-Plex 875 or equal. Weathered masonry and soft or porous cement board must be brush blasted or power tool cleaned to remove loosely adhering contamination and to get to a hard, firm surface. Laitance must be removed.

9.99.33 Specialty Metal Coatings

[CSI 09 97 40]

9.99.33.07 – System 29: Vertical turbine pump bowls, pump impellor casing interior (Submerged, Potable Water)

[CSI 09 97 41]

Part 1 – General

This section applies to pump bowl interior and exterior. The coating shall be designed for submerged conditions. The coating shall be NSF certified for direct contact with potable drinking water.

Part 2 – Products

Materials

1. 3M Scotchkote - fusion bonded epoxy (12 to 16 Mil DFT)
2. Sherwin Williams - Sher-Plate PW (10 to 12 Mil DFT)
3. AkzoNobel Devoe - BarRust 233H NSF High Solids Low Temperature Curing Epoxy Coating (10 to 12 Mil DFT)

Part 3 – Execution

Preparation

SSPC SP1 followed by SP10 Near White Blast, Surface profile shall be 2.0 Mil, minimum.

Installation

Coatings on interior and exterior of vertical turbine pump bowls, and interior of pump impeller casings must be applied at the factory.

Repairs

Manufacturer shall supply NSF approved patch kit for field repairs.

© 2023 RH2 Engineering, Inc.

Part 1 – General

Summary

This Section applies pump impellors.

Part 2 – Products

Materials

1. Belzona - 1341 Supermetalglide (two coats at 10 Mil DFT each)

Part 3 – Execution

Follow manufacturer's instructions explicitly.

9.99.33.10 – System 32: Steel Pipe Field Repairs (Potable and Non-Potable Water)

[CSI 09 97 13.30]

Part 1 – General

Summary

This Section applies to coating of steel pipe cut or welded in the field, exposing uncoated steel.

Scheduling

When system must be returned to service quickly, coordinate the work so that coating can occur as early in the process as possible to allow curing time. Provide heat to accelerate curing process if needed. At the Owner's request, provide a detailed schedule for review no more than 3 working days in advance.

Performance Requirements

For potable water pipe, product must be NSF61 certified for potable water contact, and rated for immersion within 24 hours of application at 75°F.

Part 2 – Products

Materials

1. Tnemec Series FC22 Epoxoline (one coat at 20 Mil DFT). 6-ounce tube "Field Kits" are available from TNW Inc, Seattle.

Part 3 – Execution

Preparation

Follow manufacturer's instructions explicitly. Thoroughly clean exposed metal surfaces, remove rust and impurities. Roughen surface to 3 mil profile with wire or grinder wheel. SP11 power tool cleaning. Apply coating as early into the process as possible to allow the maximum time for the coating to cure prior to reassembly.

© 2023 RH2 Engineering, Inc.

10.00 GENERAL

This division covers that work necessary for fabricating and installing all furnishings and accessories as described in these specifications and as shown on the Plans.

Sections in these specifications titled "*Common Work for . . .*" apply to all following subsections whether directly referenced or not.

10.05 Common Work for Specialties

[CSI 10 05 00]

Part 1 – General

Submittals

Submittal information shall be provided to the Owner for the following items:

- Equipment Signs
- Fire Extinguishers
- First Aid Kit
- Ear Plug Dispenser

10.06.10 Schedules for Signage

[CSI 10 06 10.13,.16]

Part 2 – Products

Materials

Unless otherwise specified, text shall be white on a background color shown below.

Purpose	Plate Color
General	Black
Warning	Red
Electrical	Black
Domestic Water	Blue

Part 3 – Execution

Installation

Install signs/markers directly on the devices in a location that does not interfere with the device operation or maintenance. If the device is too small or otherwise impractical to mount marker, locate marker as close as possible to the device on an adjacent surface.

Provide and mount, as directed, equipment signs for the following:

© 2023 RH2 Engineering, Inc.

Purpose
Pressure switches and transmitters
Control valves
Flow meters
Electrical panels and disconnects
Pumps

10.10 INFORMATION SPECIALTIES

[CSI 10 10 00]

10.14.23 Panel Signage

[CSI 10 14 23]

Part 2 – Products

Materials

Equipment Signage

1. Equipment signs shall be plastic-laminated 1-inch high, by required length, by ⅛-inch thick, with ½-inch high letters in N-2 Standard Gothic characters.

Pump Signage

1. Provide a 2-inch high, temperature resistant metal or vinyl number or name on each pump or pump motor. Number shall face the pump control panels and be placed so as not to be obscured from other equipment. Confirm with Engineer the proper numbering or naming of each pump.

Door Labels

1. Door labels shall be 2-inch tall font, easily readable at 20 feet from door. Labels shall be engraved PVC, with blue plate and white lettering. Labels shall be securely attached to the exterior of all doors with stainless steel metal screws, at 5 feet from the bottom of the door.

Electrical and Control Equipment

1. All components provided under this specification, both field- and panel-mounted, shall be provided with permanently-mounted nametags. The Engineer shall have complete control over the hardware to be labeled and the labeling provided. Provide labels as directed.
2. Provide a name tag for each piece of equipment and for each circuit and/or control device associated with the equipment.
3. Provide a nameplate for each control center unit door.

© 2023 RH2 Engineering, Inc.

4. Electrical equipment name plates and service legends shall be phenolic-engraved, rigid, laminated plastic type with adhesive back. Letter height shall be $^{5}/_{16}$-inch unless specified otherwise on the Plans. Labeling shall clearly identify the associate component. Color shall be black background with white letters.
5. Warning nameplates shall be provided on all panels and equipment which contain multiple power sources which may have energized circuits with the main disconnecting means in the off position. Lettering shall be white on red background.
6. Tags shall be securely attached. Adhesive backed tags shall also have at least two brass screws for positive fastening.
7. Provide engraved nameplates indicating load served, voltage, and phase for every circuit breaker, panel board, switchboard, motor control center, motor starter, disconnect switch, and fused switch.

10.40 SAFETY SPECIALTIES

[CSI 10 40 00]

10.43.16 First Aid Kit

[CSI 10 43 16]

Part 2 – Products

Components

Provide first aid kits at the locations shown on the Plans with the following items minimum:

- 2 packages adhesive bandages, 1 inch (16 per package)
- 1 package scissors and tweezers (1 per package)
- 1 package bandage compress, 4 inch (1 per package)
- 1 package antiseptic soap or pads (5 per package)
- 1 package triangular bandage, 1 inch (1 per package)
- 1 package iodine swabs (10 per package)
- 1 package ammonia inhalants (10 per package)
- 1 package bandage compress, 2 inch (4 per package)

Contain kit in a dust-proof, weatherproof, moisture-proof, 20-gauge steel cabinet with gasketed lid. Steel finish shall be baked enamel. Provide cabinet with wall mounting brackets. Cabinet cover shall fold down to provide a shelf, and shall be attached to cabinet by a continuous piano-type hinge. Border shall be red with white body, red lettering, cross and arrow. The kit shall have reorder information clearly marked on it.

© 2023 RH2 Engineering, Inc.

10.43.18 Ear Plug Dispenser

[CSI 10 43 18]

Part 2 – Products

Manufactured Units

Provide wall mounted ear plug dispenser(s) at the locations shown on the Plans. Dispenser equal to Moldex PlugStation with 250 pairs.

10.44.16 Fire Extinguisher

[CSI 10 44 16]

Part 2 – Products

Components

Portable, wall-mounted, 10-pound, dry-chemical fire extinguisher shall be listed and approved by Underwriters Laboratories. The fire extinguisher shall contain a dry chemical agent which is effective in extinguishing Class A, B, and C fires (tri-class), and shall be rated 2A-10B-C or greater.

Part 3 – Execution

Installation

Install extinguisher no higher than 5-feet above floor and in accordance with applicable codes. Provide a fire extinguisher attached to the interior wall near each exit door to outside.

© 2023 RH2 Engineering, Inc.

11.00 GENERAL

Sections in these specifications titled "*Common Work for . . .*" apply to all following subsections whether directly referenced or not.

11.05 Common Work for Equipment

[CSI 11 05 00]

Part 1 – General

Related Sections

- Division 1.81.30 Seismic Restraint Requirements

Submittals

Provide submittal information to the Owner for the following items:

- Pumps and Motors
- Sump Pumps
- Heat Pump
- Ventilators
- Pump Anchor Bolts

11.10 PUMPS

[CSI 43 20 00]

11.10.05 Common Work for Pumps

[CSI 43 20 05]

Part 1 – General

Summary

This section covers work necessary to provide the pumps, complete with motors and accessories, described herein and as shown on the Plans.

Related Sections

- Division 1.75 Starting and Adjusting
- Division 1.81.40 Pressure Ratings
- Division 1.81.50 Materials in Contact with Drinking Water
- Division 9.91.13.13 Coatings – Exposed Ferrous Metals, Indoors
- Division 9.91.33.01 Coatings, Metals in Contact with Drinking Water

© 2023 RH2 Engineering, Inc.

- Division 9.99.33.07 Coatings, Pump bowls and casings
- Division 10.14.23 Panel Signage
- Division 11.19 Pump Anchor Bolts
- Division 11.20.1 Common Work for Pump Motors

References

- HI - Hydraulic Institute.
- ASTM - American Society for Testing and Materials.
- AISI - American Iron and Steel Institute.
- ANSI - American National Standards Institute.

Performance Requirements

Power required to operate the pump(s) shall not exceed the motor nameplate horsepower regardless of any flow and head tolerances listed in this specification, unless allowed otherwise in the Pump Motors section.

The design and performance requirements listed for each pump must be met, with no exceptions. Pumps that do not meet all of the conditions will be rejected.

The design point must fall within the pump Preferred Operation Range (POR) referenced from the Best Efficiency Point (BEP) as follows:

Type	Specific Speed (US Units)	Design Point from BEP
Vertical	<= 4,500	70% to 120%
Vertical	> 4,500	80% to 115%

Pump parts in contact with potable water, or raw water being supplied to a potable water treatment facility, shall be lead free complying with either NSF 61 ANSI 372 tested or NSF 61 Annex G compliant. Submit lead free information with pump submittal information.

© 2023 RH2 Engineering, Inc.

Pump Name or No.	**1**	**2 (Existing)**	
Type	Vertical Turbine (well)	Vertical Turbine (well)	
Maximum Speed	1,770 rpm	1,770 rpm	
Design Flow	1,000 gpm	1,000 gpm	
Design Head	485 ft	485 ft	
Performance Requirements at Design Point			
Min. Pump Efficiency	82%	N/A	
BEP Position	Left of Design Point	N/A	
Tolerance Grade at Design Point	1U	N/A	
Min. Submergence Required	2.18 ft at 1,000 gpm	2.18 ft at 1,000 gpm	
Max. NPSHR3	14 ft at 1,000 gpm	12.3 ft at 1,000 gpm	
NPSHA	22 ft at 1,000 gpm	22 ft at 1,000 gpm	
Fluid	Potable Water	Potable Water	
Max. Fluid Temperature	50 degrees F	50 degrees F	

Head Conditions

Head conditions specified in the table are inclusive of all pump components including the casing/bowls, discharge head or elbow, column pipe, and intake strainer, as applicable.

Tolerance Grade

Performance range shall adhere to the HI 11.6 (submersible sewer pumps) or HI 14.6 (centrifugal and vertical pumps) tolerances stated herein are referenced at the specified design point(s). Flow tolerance is measured at the design point head. Head tolerance is measured at the design point flow. Efficiency is evaluated where a straight line drawn from zero flow, zero head, passes through the design point and crosses the actual pump curve.

Grade 1U (0% to +10% Flow, 0% to +6% Head, no less than 0% Efficiency).

Design Requirements

For pumps with column pipe (vertical turbine, submersible well, etc.) size the column pipe to meet the criteria below. Calculate velocity including the reduction of flow area from the shaft. Provide calculations with the submittals.

- Column length less than 20 feet: 10 feet per second maximum, or match nominal bowl diameter, whichever results in the larger column diameter.
- Column length 20 feet to 100 feet: 9 feet per second maximum.
- Column length 100 feet to 300 feet: 8 feet per second maximum.

© 2023 RH2 Engineering, Inc.

- Column length over 300 feet: 7 feet per second maximum.

See below for system curves.

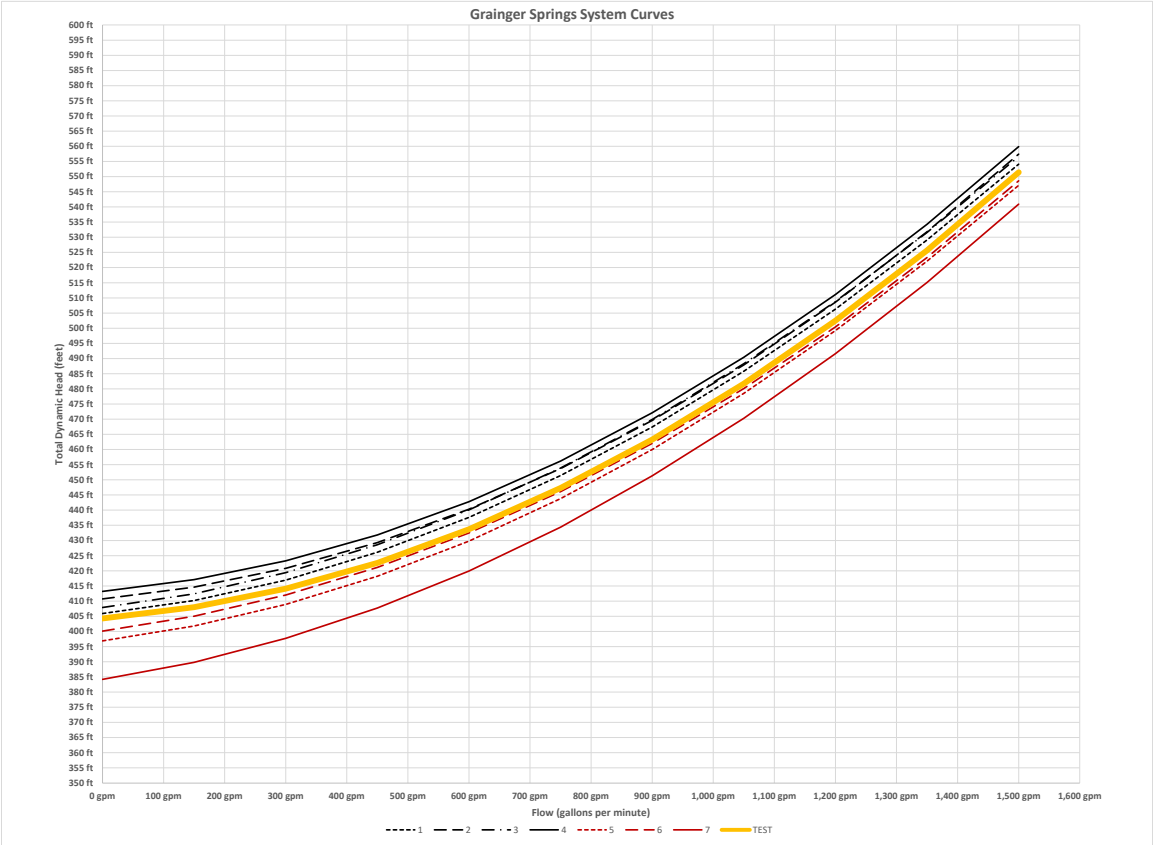

The head-capacity curve shall have a steady rise in head from maximum to minimum flow. Curves which have intermediate high or low points will be rejected.

Submittals

Provide the following information:

Source Quality Control

- A minimum of 5 installations with similarly sized and configured pumps in equivalent fluid applications installed by the Contractor or installer subcontractor. Include location, contact name, and number.

- Company name, address, and phone of the closest manufacturer's authorized service company and a qualified service company. Qualified service may be a company that is not a manufacturer's authorized service center but can perform competent service and order repair and replacement parts. Authorized service must within the 48 contiguous US states. Qualified service must be within 200 miles of the project site.

Product Data:

- Specifications and data describing all pump parts, pieces, and components. Include information on materials of construction and proposed coating systems.

© 2023 RH2 Engineering, Inc.

- Performance curves showing total dynamic head (TDH) in feet, efficiency, and net-positive-suction head required (NPSHR) versus output in gallons per minute (gpm). All losses from the drive shaft, seal, coupling, and other mechanical losses shall be included in the data presented. Catalog or software generated curves may be submitted for preliminary approval and ordering.
- Additional VFD pump curves for speeds at 80 percent, and 90 percent of full speed.
- Documentation on assembled pump and motor unit natural frequency. Natural frequency shall not occur within 20 percent of speed above or below the pump's operating speed range of 1770 rpm to 1416 rpm.
- Provide up and down thrust forces versus flowrate for each design point specified.
- Provide up thrust force at dry start condition.
- Minimum required submergence (ft) at design point
- Complete list of all pump system components and accessories.
- Column pipe headloss calculation (if applicable).
- Bearing life (L10) for ball and roller bearings. Calculations supporting L10 of no less than 40,000 hours.

Shop Drawings:

- Detailed dimensional drawings showing outline dimensions, lengths, overall sizes, materials, and weights for each pump unit and associated accessories.

Closeout Submittals: Provide the following submittals prior to project closeout:

- Operations and Maintenance manual.
- Manufacturer signed warranties with pump serial numbers.

Schedule

Quality Assurance

The pump manufacturer is responsible for the motor and pump assembly.

Delivery, Storage, and Handling

Deliver, store, and handle pumps in accordance with manufacturer's recommendations.

Warranty

Warrant all new pumping equipment described in this section and provided under this contract against defects in materials and workmanship for a period of two years after date of project acceptance.

Following pump and motor installation, furnish the services of a qualified manufacturer's representative to inspect pump units and inform Owner, prior to field testing, of any defects or concerns regarding condition of each unit and its installation at the job site. Upon resolution of any defects or concerns (if any) and work performed by the Contractor at their expense, to

© 2023 RH2 Engineering, Inc.

the satisfaction of the Owner, manufacturer's warranty shall then be in full effect with no reservation or qualifications other than those stated in the manufacturer's warranty. Upon completion of pump installation, manufacturer's representative shall provide written certification that equipment is fully warranted as installed.

Extra Materials

Provide any special tools required for pump or motor maintenance.

Part 2 – Products

Existing Products

The existing pump (Pump No. 2) shall fit into the relocated space in the proposed pump house. Refurbish the Pump No. 2 line shaft/column to extend the overall length of the Pump No. 2 to match the length of the new/proposed Pump No. 1. Verify dimensions in the field for pump installation. If modifications to any equipment or new adapters are necessary to accept the new or existing pump, provide all required modifications and adapters, and include the price in the bid. Additional reimbursement for modifications will be paid by time and materials only if, in the opinion of the Engineer, actual conditions vary materially from those presented in these contract documents and were not reasonably determinable from a pre-bid field inspection.

Existing Pump No. 2 components may be reused only if specifically identified below. Existing wear components (e.g. bearings, shaft, seals, gaskets, etc.) may not be reused and shall be removed and replaced. Reused components shall be cleaned and recoated per Division 9.

- Discharge head
- Column pipe
- Bowl assembly
- Mounting structure (base plate or skid)

Proposed Products

The proposed Pump No. 1 shall be an 8-stage vertical turbine matching the make and model of the existing Pump No. 2.

Components

For pumps in domestic water applications, all wetted pump components, coatings, and lubricants shall be approved for use in potable drinking water in accordance with U.S. Food and Drug Administration (FDA) or National Sanitation Federation (NSF 61) rules and regulations.

Neither 201 nor alloy-20 stainless steels are approved for any pump components unless specifically mentioned otherwise in these specifications.

All pump system components are to come from the pump manufacturer and include:

- Motor
- Bowl assembly

© 2023 RH2 Engineering, Inc.

- Column assembly (column pipe may be supplied by other sources, but the Contractor is responsible for ensuring proper fit of all work)
- Discharge head, elbow, or pump casing
- Couplings
- Intake strainer
- All other necessary appurtenances for complete unit assembly.

Accessories

Provide removable guards to protect personnel from rotating components. Guards to meet the minimum requirements of WAC 296-806-20042.

All pumps are to include an engraved non-corrodible metal nameplate on the exterior of the pump head or body (duplicate attached to pump support flange or shipped loose if submersible), readily accessible without requiring any disassembly. The nameplate shall include, at a minimum, the following information (as applicable for the type of pump):

- Pump Manufacturer
- Pump Model Number
- Pump Serial Number
- Impeller Number
- Impeller Trim
- Number of Stages
- Design TDH (feet)
- Design Flow (gpm)
- Supplier Name and Phone Number
- Date of Manufacture

Source Quality Control

<u>Factory Pump Performance Testing and Certification</u>

Factory testing curves and data on each pump must be provided prior to pump delivery. Variations between factory tests and previously submitted catalog curves may be cause for rejection. Factory testing of the pump may use a dynamometer or calibrated shop motor.

Perform a performance test as described in the latest edition of Hydraulic Institute's (HI) Pump Tests (ANSI/HI 14.6 Centrifugal and Vertical, ANSI/HI 11.6 Submersible), with results submitted to the Engineer and approved for each pump prior to shipment to the construction site. Test pumps at the factory to HI standards, except as modified below.

- Test speed must be within 20 percent of the rated speed unless prior written approval is given by the Owner. Approval is not guaranteed.

© 2023 RH2 Engineering, Inc.

- HI 14.6.5.7.1: No less than three additional test points beyond the five points listed in the HI standard are required. Two of these points between shutoff head and design point, and one point to the right of the design point.
- HI 14.6 Appendix K, 11.6.10: Model tests are not allowed unless prior approval is given by Owner. Supplier shall submit a written request to perform a model test with procedures outlined for Owner's review.
- Provide a certified data sheet and performance curve for each pump similar to HI 14.6 Appendix H pump test summary of information. At a minimum provide:
    - Information per HI standards.
    - TDH (ft) vs. Flow (gpm)
    - Power (hp) vs. Flow (gpm)
    - NPSHR (ft) vs. Flow (gpm) (catalog data is acceptable)
    - Motor Input Power
    - Hydraulic Efficiency (%) vs. Flow (gpm) (where applicable)
- Take vibration readings under normal operating conditions at the design point.
- If a throttled valve is used to adjust the operational point during vibration testing, the valve must be no closer than 20 times the pipe diameter from the pump and separated from the pump by at least one flexible pipe joint.
- For variable speed pumps, take readings at full speed and two reduced speeds as directed by the Owner. Do not test below the manufacturer's lowest allowed speed.
- Read vibrations at the locations described in HI 9.6.4.2.3. In general, the reading locations shall be at:
    - The middle of each bearing housing of between bearing pumps.
    - Near the outer casing bearing of end suction pumps.
    - Near the top of the motor support flange for vertical motors.
- Read vibrations in the three orthogonal planes, with the maximum reading governing the results. If the vibration tests fail, the pump manufacturer and/or Contractor shall modify the equipment and/or installation and retest until the standards are met. Submit the vibration test results to the Owner. The manufacturer's representative shall provide proper, calibrated instrumentation to verify completed unit vibration.
- Factory vibration testing shall be performed by a Level 1 certified Vibration Analysis Tester. The results of the test shall be reviewed by a Level 3 certified Vibration Analysis Tester. Certification shall be current and from one of the following: Mobius Institute, Vibration Institute, Technical Associates of Charlotte.

Graphs must be submitted and approved prior to shipment of pumps.

© 2023 RH2 Engineering, Inc.

Part 3 – Execution

Preparation

Disinfect domestic water pumps by flushing with a solution of 50 ppm chlorine prior to installation. After disinfecting, immediately flush and rinse the pumps with clean water to remove the high chlorine concentration solution. This includes the impellers and interior of bowls and casings.

Installation/Construction

Install pumps in accordance with manufacturer's directions. Installation shall be supervised and approved by manufacturer's representative prior to operating or field testing.

Adjust pump assemblies so that driving units are properly aligned, plumb, and level with the driven units and all interconnecting shafts and couplings. Flexible couplings shall not be used to compensate for misalignment.

Connect piping to the pump in a manner which prevents strain on the pump casing or head.

Field Quality Control

See Division 1.75 Starting and Adjusting for scheduling and notification requirements.

A qualified and authorized representative of the pump manufacturer shall conduct or supervise the field testing. Prior to acceptance of installed pumps, manufacturer's representative shall demonstrate proper operation of pumps at capacities stated.

Contractor is responsible for startup and adjustments to meet the specifications. Perform field tests represent the performance of the new pump(s) when operating under actual field conditions and to establish the acceptance of the pump(s) furnished and installed. Perform the field test in the presence of the Owner after the piping and controls have been installed.

Perform a performance test similar to those described in the latest edition of Hydraulic Institute's (HI) Pump Tests (ANSI/HI 14.6 centrifugal and vertical, ANSI/HI 11.6 Submersible), with results for each pump submitted to the Owner for approval.

Perform a field test to the accuracy obtainable with the monitoring equipment installed with the piping and instrumentation. If sufficient field devices are not available to test all parameters, the Contractor shall provide testing gauges and meters as needed. At a minimum, the following are needed:

- Suction pressure gauge or water level probe.
- Discharge pressure gauge.
- Flow meter.
- Electric current and voltage meter(s), one per phase.
- Vibration sensor.

Where existing gauges and meters are retained and not been replaced under this contract, the Contractor may temporarily replace such equipment during testing with their own at their

© 2023 RH2 Engineering, Inc.

expense, if approved by the Owner. The Owner makes no guarantee of the accuracy of existing gauges and meters.

Results shall be within plus or minus 1 percent of the tolerances listed above under Performance Requirements.

Perform testing under the observation of the Owner. At that time, the following data shall be collected for each pump:

- TDH vs. Flow at a minimum of three points which include: Shutoff head (unless pressure is deemed excessive by the Owner), fully open to system, and approximately 50 percent design flow with throttled discharge valve. Additional points may be required at the discretion of the Owner.
- Overall Efficiency (motor power draw required for this calculation).
- Take vibration readings under normal operating conditions at the design point. If it is not possible to reach the exact design point, then the vibration readings will be taken within the preferred operating range at a point agreed to by the Owner. A factory vibration test is not a substitute for a field test.
- If a throttled valve is used to adjust the operational point during vibration testing, the valve must be no closer than 20 times the pipe diameter from the pump and separated from the pump by at least one flexible pipe joint.
- For variable speed pumps, take readings at full speed and two reduced speeds as directed by the Owner. Do not test below 50% of design flow without Owner's approval.
- Read vibrations at the locations described in HI 9.6.4.2.3. In general, the reading locations shall be at:
    - The middle of each bearing housing of between bearing pumps.
    - Near the outer casing bearing of end suction pumps.
    - Near the top of the motor support flange for vertical motors.
- Read vibrations in the three orthogonal planes, with the maximum reading governing the results. If the vibration tests fail, the pump manufacturer and/or Contractor shall modify the equipment and/or installation and retest until the standards are met. Submit the vibration test results to the Owner. The manufacturer's representative shall provide proper, calibrated instrumentation to verify completed unit vibration.
- Field vibration testing shall be performed by a Level 1 certified Vibration Analysis Tester. Certification shall be current and from one of the following: Mobius Institute, Vibration Institute, Technical Associates of Charlotte.

Maximum allowable completed unit vibration (pump and motor installed) as shown below. (Velocity measurements are inch/second RMS)

© 2023 RH2 Engineering, Inc.

Vertical Turbine Pumps		Between Bearing and End Suction	
Power	Vibration	Power	Vibration
(hp)	(in/sec)	(hp)	(in/sec)
0-267	0.13	0-267	0.15
> 267	0.17	> 267	0.19

Upon completion of pump installation and testing, manufacturer's representative shall provide written certification that equipment is installed correctly and fully warranted. Provide certification that pumps meet all requirements set forth in these specifications and submittal literature. The Contractor shall provide a written report of all test conditions and results.

Repair

Repair and retest units failing any field test. If unit fails second field test, unit will be rejected, and supplier shall furnish a unit that will perform as specified.

11.11.2 Vertical Turbine Pumps

[CSI 33 11 33 or 43 24 50]

Part 1 – General

Summary

This section covers that work necessary for providing and installing vertical turbine pumps, complete with motors and accessories, described herein and as shown on the Plans.

Products installed but not supplied under this section: Existing Pump No. 2 including the following components:

- Pump No. 2 bowl assembly
- Pump No. 2 discharge head
- Pump No. 2 Column Pipe
- Mounting structure (base plate or skid)

Related Sections

- 9.91.23.01 or 9.91.13.13 Indoor ferrous metals coating (pump head exterior; pump can exterior)
- 9.91.33.01 Metals in contact with drinking water coating (pump can interior; pump column pipe [can-mounted]; steel pump discharge head interior)
- 9.99.33.07 Pump bowls

© 2023 RH2 Engineering, Inc.

- 11.10.1 Common Work for Pumps
- 11.20 Pump Motors

References

- Hydraulic Institute 2.1 – 2.6, 9.1 – 9.8, 14.6
- AWWA E103 Horizontal and vertical line-shaft pump construction.

Submittals

Submit detailed dimensional drawing for pump column, sole plate assembly, and pump foundation as applicable.

Factory Pump Performance Testing and Certification: Provide factory performance testing for each of the following pumps:

Pump No. 1

Part 2 – Products

Manufactured Units

Pump shall be vertical turbine, well type.

Components

If the pump motor will be controlled by a VFD, all pump components shall be sized and selected for variable speed operation.

<u>Discharge Head</u>

Fabricated steel or cast iron pump head with positive sealing base plate for mounting pump as shown on the Plans.

Pump head to have a pressure rating at least 50 psi greater than full shut-off head, after accounting for suction head or lift.

Suction flange: ANSI Class 125/150 (AWWA C207 Class D minimum).

Discharge flange: ANSI Class 250/300 (AWWA C207 Class F)

3/4-inch minimum tap on outlet for discharge pressure gauge

Two access openings to the shaft seal, each protected with an expanded metal screen attached to the head with two piano hinges and a locking clip hasp.

One 2-inch NPT access port for sampling and level measuring equipment between the outer wall of the head and the water box, unless other provisions are shown on the plans.

<u>Head Drain</u>

If a stuffing box seal is used, provide a threaded drain port in the head. Field install Sch 40 PVC piping from drain port to the nearest floor drain, unless shown otherwise on the plans. Pipe size ½-inch diameter or match head port size, whichever is larger. Outlet must have an air gap of two pipe diameters above the floor or drain grate. Secure drain pipe to adjacent piping or structure with clamps spaced no more than 4 feet apart, and as necessary for a rigid assembly.

© 2023 RH2 Engineering, Inc.

Anchors shall be easy to disassemble and reuse. Do not obstruct walking paths or equipment access with drain pipe. Slope drain pipe at a minimum of ¼-inch per foot. Do not place drain pipe outlet where water will run across a walking path.

Column

The column pipe shall be schedule 40 steel unless depth or pressure requires a stronger pipe.

The column shall have threaded bronze or stainless steel bearing retainers screwed into the pipe couplings and retained by the butted pipe ends for threaded column pipe, or drop-in style for flanged column pipe. Each bearing retainer shall contain a water lubricated, cutless, rubber bearing designed for vertical turbine pump service.

Line Shaft

Furnish the shaft in interchangeable sections not over ten feet in length.

The line shaft shall be selected such that the elongation due to weight and hydraulic thrust shall not exceed the axial clearance of impellers in the pump bowls. Size of shaft shall be no less than that determined by AWWA Specification E103, Section 4.4.

The line shaft shall be turned, ground, and polished precision 416 or 17-4PH stainless shafting sized to operate the pump without distortion or vibration and couple with steel couplings machined from solid bar steel.

Head shaft shall be a 2-piece design with an easily accessible coupling located between pump and motor.

Provide an adjusting apparatus on top of the head shaft to allow for impeller adjustment. This method shall provide a positive locking device. Coupling shall be stainless steel.

Bowl and Impeller Assemblies

Bowl bearings shall be fabricated from bronze materials or a combination of bronze and rubber, water-lubricated, and designed for vertical turbine pump service.

Pump bowls shall be constructed from close-grained cast iron or ductile iron. Coat the bowl interior with ceramic, porcelain or per Division 9.99.33.

Impellers may be enclosed for all applications, or semi-open if the suction bowl is less than 150 feet below the discharge head and there are no more than two stages.

Impellers shall be fabricated from:

316 stainless steel.

For 6-inch diameter (nominal) and larger bowls with enclosed impellers, each bowl shall have a replaceable wear ring at the suction eye. For thrust balanced (semi-open or enclosed) impellers, each bowl shall also have a wear ring on the discharge end.

Vertical impeller adjustment shall be by external means. Statically and dynamically balance impellers. Attach impellers to the pump shaft by a positive locking stainless steel tapered impeller collet. For shaft diameters larger than 2.5 inches, keys and thrust ring retainers shall be used.

© 2023 RH2 Engineering, Inc.

If approved by the Owner, the suction impeller may be a "low NPSH" style to meet the NSPH design requirements.

Seals

Packed, bleed-off type stuffing box line shaft seal, with a minimum of one cage ring and five rings of packing.

Strainer

Provide a stainless steel or bronze strainer having a net inlet opening of not less than four times the area of the suction pipe. Strainer shall be a basket type.

Finishes

See Related Sections. Coat the following items:

- Discharge head
- Pump bowl interior
- Pump bowl exterior
- Column pipe

11.19 Pump Anchor Bolts

[CSI 03 15 19 (cast-in) or 05 05 19 (drilled)]

Part 2 – Products

Materials

Pump anchor bolts shall be Deco Heavy-Duty Adjustable Standard Anchors or approved equal. Provide removable mounting stud for easy pump installation and removal. Anchor must be adjustable to 75% of the bolt diameter in any direction prior to tightening bolt.

11.20 PUMP MOTORS

11.20.01 Common Work for Pump Motors

[CSI 40 05 93]

Part 1 – General

Summary

This section is not applicable for chemical dosing pumps or small sump pumps.

Related Sections

- Division 9.91.13.1 Coatings – Exposed Metals, Indoors
- Division 11.10.05 Common Work for Pumps

© 2023 RH2 Engineering, Inc.

References

- HI - Hydraulic Institute.
- ASTM - American Society for Testing and Materials.
- AISI - American Iron and Steel Institute.
- ANSI - American National Standards Institute.
- IEEE – Institute of Electrical and Electronics Engineers

Submittals

Submittal information shall be provided for each individual motor.

Complete list of all motor components and accessories to be provided. All motor system components are to come from the pump manufacturer.

Company name, address, and phone of the closest manufacturer's authorized service company and a qualified service company. Qualified service may be a company that is not a manufacturer's authorized service center but can perform competent service and order repair and replacement parts. Authorized service must within the 48 contiguous US states. Qualified service must be within 200 miles of the project site.

Specifications and data describing all motor parts, pieces, and components. Include information on materials of construction and proposed coating systems.

Motor data including type, torque, RPM, no-load current, full-load amps, service factor, power factor, and motor efficiency at full-load. Provide maximum recommended motor starts per hour.

For variable speed drive motors, provide performance curves and motor efficiency at 25, 50, 75, and 100-percent of full load.

Bearing life (L10) for ball and roller bearings. Calculations supporting L10 of no less than 40,000 hours.

Each motor shall be factory-tested and a certified graph or table of the following parameters supplied with each motor. Each data sheet shall clearly identify the serial number of the tested motor. Test shall consist of operating motor on a dynamometer until internal temperature has stabilized and then performing the following tests at varying loads:

- Horsepower vs. Load
- Power factor vs. Load
- Efficiency vs. Load or Wire-to-Water Efficiency vs. Load

<u>Shop Drawings:</u>

- Detailed dimensional drawings showing outline dimensions, lengths, overall sizes, materials, and weights for each motor and accessories.
- Wiring diagrams for motor and any embedded sensors or switches.

© 2023 RH2 Engineering, Inc.

Closeout Submittals: Provide the following submittals prior to project closeout:

- Operations and Maintenance Manual
- Manufacturer signed warranties with serial numbers.

Quality Assurance

Motors shall be dynamically balanced at the factory and shall have rigid mounting maximum vibration amplitude meeting NEMA MG-1 Grade A:

	Grade A	Grade B	Grade B
Maximum Vibration	0.0019 inch pk-pk 0.12 inch / sec	0.0013 inch pk-pk 0.08 inch / sec	0.0016 inch pk-pk 0.10 inch / sec
1,200 rpm	All sizes	1 to 75 hp	Above 75 hp
1,800 rpm	All sizes	1 to 125 hp	Above 125 hp
3,600 rpm	All sizes	1 to 150 hp	Above 150 hp

Delivery, Storage, and Handling

Deliver, store, and handle motors in accordance with manufacturer recommendations. Store in a dry, enclosed environment and in the same orientation as their final mounting.

Design Requirements

Motors designed for continuous cycle.

Motors (not including submersibles) to be premium efficiency with efficiency at design point not less than shown in Table C405.8(1) or C405.8(2), as applicable, of the Washington State Energy Code (WAC 51-11C-40508), current edition. Efficiency as determined by IEEE Standard 112, Test Method B.

Size motors such that power draw in the defined operating range of the pump shall not exceed the nameplate size. Power draw shall not encroach into the service factor. Motor size selection shall include all losses, including motor and pump bearings.

Reverse thrust bearings: Oil-bath lubricated with up-thrust (or reverse axial thrust) protection of 30 percent of the normal operating thrust, or as required to support the pump reverse thrust at dry startup, whichever is less.

© 2023 RH2 Engineering, Inc.

Pump Name or No.	**1**	**2**
Phase, Volts, Hz	3-ph, 460-V, 60-Hz	3-ph, 460-V, 60-Hz
Horsepower (max. nameplate)	150	150
Starting (full voltage, reduced voltage, VFD) [1]	VFD	VFD
Nominal maximum speed (rpm)	1,800	1,800
Inverter duty (yes/no) [2]	Yes	Yes
Shaft (solid/hollow)	Hollow	Hollow
Steady bushing required (yes/no) [3]	Yes	Yes
Reverse ratchet (yes/no) [4]	Yes	Yes
Enclosure [5]	WP1	WP1
NEMA Design [6]	B	B
Service Factor	1.15	1.15
Max ambient temperature rating	40° Celsius	40° Celsius
Insulation	Class F (115° Celsius rise max.)	Class F (115° Celsius rise max.)
Actual field temperature rise	Class B (90° Celsius max.)	Class B (90° Celsius max.)
Anti-Condensation heaters (yes/no) [7]	No	No
Winding temperature sensors (PTC/RTD/None) [8]	None	None
Winding thermostats (yes/no) [9]	No	No
Bearing temperature sensors (yes/no)	No	No

Table Footnotes

1. Full or reduced voltage starting: If not listed here, then as shown on the plans.
2. Motors for use with Variable Frequency Drives shall be inverter duty rated per NEMA MG1 Part 31.

   Motors for use with VFDs shall be provided with either insulated bearings, ground brushes, or a shaft (bearing) grounding ring. Shaft grounding ring equal to AEGIS.

© 2023 RH2 Engineering, Inc.

3. Steady bushing: Must be provided when using a hollow shaft and mechanical seal. Also required for motors larger than 10 hp at speeds above 2,500 rpm.
4. Reverse ratchets: drop-in ball type (not pin and spring) non-reverse mechanism.
5. Other enclosure types will be accepted if they are higher on the list below than the type shown in the table. Substitutions for Explosion Proof motors are not allowed.
    - TEFC
    - WPII
    - WP1
    - ODP
6. Winding temperature sensors: One positive temperature coefficient (PTC) thermistor or resistant temperature detector (RTD) per phase embedded in the winding for a total of three (3) sensors. PTC thermistors shall be wired in series, RTD shall be wired individually. All wires clearly labeled at the termination point.

Provide wiring diagrams for internal sensors and switches on the outside of the motor. Clearly label all such sensor and switch wires for connection to the control system.

Integral thermal and fluid leakage sensors and switches shall have separate contacts from the overload protection systems.

Warranty

All new equipment described in this section and provided under this contract shall be warranted against defects in materials and workmanship for a period of two years after date of project acceptance.

Following motor installation, furnish services of a qualified manufacturer's representative to inspect units and inform Owner, prior to field testing, of any defects or concerns regarding condition of each unit and its installation at the job site. Upon resolution of any defects or concerns (if any) and work performed by the Contractor at their expense, manufacturer's warranty shall then be in full effect with no reservation or qualifications other than those stated in the manufacturer's warranty.

Upon completion of motor installation, manufacturer's authorized representative shall provide written certification that equipment is fully warranted as installed. A combined pump-motor warranty will be acceptable in lieu of separate warranties.

Maintenance

Provide any special tools required for motor maintenance. Provide enough lubricant for one service change (not applicable for submersible motors).

Part 2 – Products

Accessories

All motors are to include an engraved non-corrosive metal nameplate on the exterior of the motor (duplicate shipped separately if submersible), readily accessible without requiring any

© 2023 RH2 Engineering, Inc.

disassembly. The nameplate shall include, at a minimum, the following information. Common abbreviations shown in brackets [ ].

- Manufacturer's name
- Motor type [TYPE]
- Model Number [MN, MODEL, MOD.NO]
- Serial Number [SN, SERIAL, SER NO]
- Frame size [FRAME]
- NEMA design letter [DESIGN]
- Insulation class or rated temperature rise [INS, CLASS]
- Nominal Power (hp) [HP, OUTPUT]
- Time rating [RATING]
- Locked rotor kVA code [CODE]
- Service Factor [SF]
- Voltage [VOLTS]
- Phase [PH]
- Frequency (Hz) [CYCLES]
- Full load amps [FLA]
- Full load speed (rpm) [SPEED, FL RPM]
- Nominal Efficiency (%) [NEMA NOM EFF]
- Date of Manufacture
- Special ratings (Inverter duty, NFPA, Class 1 Division 1, UL, etc.)
- Thermal protection (if sensors or switches are included)
- Maximum ambient temperature [AMB]
- Minimum efficiency (%) [NEMA MIN. EFF]
- Enclosure type [ENCL]
- Number of poles [POLES]
- Weight (lbs)
- Bearing numbers / types
- Power factor [PF]
- Torque (ft lbs)

© 2023 RH2 Engineering, Inc.

- Maximum altitude (ft) [ALT]

Connect motor and pump shaft with manufacturer's recommended coupling, complete with non-release protection (if non-reversing ratchet is not specified), to prevent pump shaft from unscrewing in the event of phase or flow reversal.

Finishes

Pump motors shall be furnished with a prime coat or finished epoxy coat of the manufacturer's standard finish. Stainless steel casings need not be coated. Motors with only a primer coating shall be finish coated in the field with a product suitable for the environment and the motor temperature range, submit to Owner for approval.

Part 3 – Execution

Examination

Provide all lifting equipment necessary for installation of the motors.

Installation/Construction

Install units in accordance with manufacturer's specifications and direction.

Field Quality Control

Installation shall be supervised and approved by manufacturer's representative prior to operating or field testing units. A field test shall be conducted and/or supervised by the pump or motor manufacturer's representative after the piping and controls have been installed. Upon completion of installation and testing, manufacturer's representative shall provide written certification that equipment is fully warranted installed.

Contractor is responsible for calibration, startup, and initial performance to meet specifications herein. A field test shall be made to give an indication of the performance of the new motor when it is operating under actual field conditions and to establish the acceptance of the motor furnished and installed. The field test shall be observed by the Engineer after the piping and controls have been installed. Testing shall be completed in accordance with the requirements provided above.

The Contractor shall provide calibrated and certified measuring devices to measure voltage, current, and power factor for each pump motor after they have been installed. The manufacturer's representative shall provide proper, calibrated instrumentation to verify maximum completed unit vibration amplitude.

The following data shall be collected for each motor:

- Motor current (amps), voltage, and power factor vs. Flow (gpm) at points specified by the Owner which may include shutoff head, throttled flow at 50-percent, and full flow.
- Vibration at design point.
- Vibration vs. Speed (variable speed motors only).

Repair and retest units failing field test. If unit fails second field test, unit will be rejected, and supplier shall furnish a unit that will perform as specified.

© 2023 RH2 Engineering, Inc.

11.21 Non-Submerged Pump Motors

[CSI 40 05 93.13 or 43 23 90]

Part 1 – General

Related Section

- Division 11.20.1 Common work for pump motors

Design Requirements

- Full compliance with NEMA MG-1. Squirrel cage induction type. Vacuum impregnated windings.
- The pump column will be routinely dry at startup. Supplier shall provide up-thrust protection for dry start condition.

11.60 TREATMENT EQUIPMENT

- *[CSI 46 00 00]*

11.64.73 Storage Tanks

11.64.73.13 Chemical Storage Tank

Part 1 – General

Summary

1. This specification covers upright, cylindrical, flat, and/or cone bottom tanks molded in one-piece seamless construction by rotational molding. The tanks are designed for above-ground, vertical installation and are capable of containing chemicals at atmospheric pressure. Included are requirements for materials, properties, design, construction, dimensions, tolerances, workmanship, and appearance. Tank capacities are from 375 gallons up to 16,500 gallons.
2. This specification does not cover the design of vessels intended for use at pressures above or below atmospheric conditions. It is also not for vessels intended for use with liquids heated above their flash points, temperatures above 130 degrees Fahrenheit.

Work of this Section

1. The work of this section includes providing Type I crosslink, high density polyethylene tanks with piping connections, ladders, seismic restraint, and accessories for chemical storage. Tank resin and accessories to be compatible with chemical being stored for this Contract.
2. The work also requires that one manufacturer accept responsibility for furnishing the work as indicated.
3. The work additionally requires that the manufacturer who accepts the indicated responsibilities shall manufacture the tank.

© 2023 RH2 Engineering, Inc.

4. The installing contractor will coordinate the installation of all items specified herein and required to ensure the complete, and proper interfacing of all the components and systems.

Related Sections

Division 1.75.05 Treatment System Testing

Division 1.81 Seismic Restraint and Anchorage

References

Except as otherwise indicated, the current editions of the following apply to the work of this section.

1. American Society for Testing and Materials (ASTM) Standards
   a. ASTM D618 Conditioning Plastics and Electrical Insulating Materials for Testing
   b. ASTM D638 Tensile Properties of Plastics
   c. ASTM D746 Brittleness Temperature of Plastics and Elastomers by Impact
   d. ASTM D790 Flexural Properties of Unreinforced and Reinforced Plastics and Electrical Insulating Materials
   e. ASTM D883 Definitions of Terms Relating to Plastics
   f. ASTM D1505 Density of Plastics by the Density-Gradient Technique
   g. ASTM D1525 Vicat Softening Temperature Plastics
   h. ASTM D1693 Environmental Stress-Cracking of Ethylene Plastics
   i. ASTM D1998 Standard Specification for Polyethylene Upright Storage Tanks
   j. ASTM D2837 Method for Obtaining Hydrostatic Design Basis for Thermoplastic Pipe Materials
   k. ASTM D3892 Practice for Packaging/Packing of Plastics
   l. ASTM F412 Definitions of Terms Relating the Plastic Piping Systems

2. Association of Rotational Molders (ARM) Standards
   a. Low Temperature Impact Resistance (Falling Dart Test Procedure)

3. National Sanitation Foundation (NSF)/ American National Standards Institute (ANSI)
   a. ANSI 61 American Waterworks Association – Drinking Water System Components

4. American National Standards Institute (ANSI) Standards
   a. ANSI B-16.5 Pipe Flanges and Flanged Fittings

5. Occupational Safety and Health Administration (OSHA) Standards
   a. 29 CFR 1926.152 Occupational Safety and Health Administration, Flammable and Combustible Liquids

6. Building Code
   a. 2014 Oregon Structural Specialty Code

© 2023 RH2 Engineering, Inc.

Design and Performance Standards

1. The minimum required wall thickness of the cylindrical shell at any fluid level shall be determined by the following equation, but shall not be less than 0.187 inches thick.
    1. T = P x O.D./2 SD = 0.433 x S.G. x H x O.D./2 SD
    2. T = wall thickness
    3. SD = hydrostatic design stress, PSI
    4. P = pressure (.433 x S.G. x H), PSI
    5. H = fluid head, ft.
    6. S.G. = specific gravity, g/cm^3
    7. O.D. = outside diameter, in.

    b. The hydrostatic design stress shall be determined by multiplying the hydrostatic design basis, determined by ASTM D2837 using rotationally molded samples, with a service factor selected for the application. The hydrostatic design stress is 600 PSI at 73 degrees Fahrenheit for Type I and 550 PSI for Type II materials.

    c. The hydrostatic design stress shall be derated for service above 100 degrees Fahrenheit and for mechanical loading of the tank.

    d. The standard design specific gravity shall be 1.9.
2. The minimum required wall thickness for the cylinder straight shell must be sufficient to support its own weight in an upright position without any external support. Flat areas shall be provided to allow locating large fittings on the cylinder straight shell.
3. The top head must be integrally molded with the cylinder shell. The minimum thickness of the top head shall be equal to the top of the straight wall. The top head of tanks with 2,000 or more gallons of capacity shall be designed to provide a minimum of 1,300 square inches of flat area for fitting locations.
4. Tanks with 2,000 or more gallons of capacity shall have a minimum of three lifting lugs. The lifting lugs shall be designed to allow erection of an empty tank.
5. The tank shall be designed to provide a minimum of four tie-down lugs integrally molded into the top head. The tie-down lugs shall be designed to allow tank retention in wind and seismic loading situations without tank damage.

Submittals

1. Factory shop drawing that includes overall tank dimensions; manufacturer part number; fitting and accessory orientation; fitting, gasket and bolt style and size; tank material and specific gravity; and tank color. Provide details on inlet and outlet fittings, manways, flexible connections and vents.
2. Seismic support structure and anchoring system details, seismic and engineering calculations with finite analysis stamped by a licensed engineer in the state of the installation.
    a. Wall thickness. Hoop stress shall be calculated using 600 psi @ 100 degrees F.

© 2023 RH2 Engineering, Inc.

   b. Tank restraint system. Show seismic and wind criteria.
3. Tank and Fitting Material Data Sheets and statement by the manufacturer indicating compliance with the materials requirements.
   a. Resin manufacturer data sheet
   b. Fitting material
   c. Gasket style and material
   d. Bolt material
4. Chemical compatibility sheet to include chemical, concentration, and storage temperature.
5. Manufacturer's guidelines for use and installation.
6. Manufacturer's tank unloading and storage procedures.
7. Quality assurance inspection report to include the following.
   a. Tank description (nominal gallonage and diameter, tank material, specific gravity and hoop stress design, and color).
   b. Review of wall thickness audit.
   c. Low temperature impact test results.
   d. Ultrasonic tank thickness test results.
   e. Hydrostatic test results.
   f. Fitting placement sign-off.
   g. Accessory inspection.
   h. Tank visual inspection.
8. Factory warranty.
9. Supporting documentation for Manufacturer's certification to NSF/ANSI Standard 61 – Drinking Water System Components for water treatment chemicals.
10. Foam insulation data sheets as required.
11. Factory Test Report
    a. Material, specific gravity rating at 600 psi @ 100 degrees F design hoop stress
    b. Wall thickness verification
    c. Fitting placement verification
    d. Visual inspection
    e. Impact test
    f. Hydrostatic Test

Quality Assurance

1. All tanks shall be undergo a Low Temperature Impact Test per ASTM D1998. Test specimens < ½-inch thickness shall be tested at 100 ft.-lb. Test specimens > ½-inch thickness shall be tested at 200 ft.-lb.

2. All tanks 2,000 gallons or larger shall be measured for tank wall thickness at 6-inch increments up the straight side of the vessel, at 0 degrees, 90 degrees, 180 degrees, and 270 degrees around the tank circumference with 0 degrees being the tank manway and going counter-clockwise per ANSI standard drafting specifications. All tanks shall meet

© 2023 RH2 Engineering, Inc.

design thickness requirements and tolerances. A full set of testing results must be provided with the tanks shipment.

3. All tanks shall undergo a hydrostatic water test shall consist of filling the tank to brim full capacity for a minimum of four hours and conducting a visual inspection for leaks.
4. The finished tank wall shall be visually inspected and certified to be free, as commercially practicable, of visual defects such as foreign inclusions, air bubbles, pinholes, pimples, crazing, cracking, and delaminations that will impair the serviceability of the vessel. Fine bubbles are acceptable with Type II tanks to the degree in which they do not interfere with proper fusion of the resin melt. All cut edges where openings are cut into the tanks shall be trimmed smooth.
5. Tanks shall be manufactured from materials compatible to contain the intended chemical at the storage temperature.

Delivery, Storage and Handling

Project Conditions

Warranty

The tank shall be warranted for three (3) years to be free of defects in material and workmanship from the date of project acceptance as determined by the Owner in writing.

Part 2 – Products

Manufacturers

Chemical storage tanks shall be as constructed by PolyProcessing Company, (866) 590-6845 or www.polyprocessing.com, Snyder Industries, Inc. (402) 467-5221 or www.snydernet.com, or approved equal.

Components

Tanks

1) Materials: Polyethylene shall be Type I crosslink high density-type meeting or exceeding the following.

Property	ASTM Method	Value
Density (gm/cc)	D1505	0.938 to 0.946
Tensile strength at yield (psi minimum)	D638	2,800
Elongation at break (min percent)	D638	700
ESCR, 100% Igepal, Cond A, F50	D1693	> 1,000
ESCR, 10% Igepal, Cond A, F50	D1693	>1000
Vicat softening temperature (deg.F)	D1525	250
Flexural modulus (psi)	D790	102,000

© 2023 RH2 Engineering, Inc.

2) Operating Conditions: Chemical storage tanks provided under this section shall be suitable for the following operating conditions.

Property	Value
Chemical stored	Sodium Hydroxide (NaOH)
Concentration, %	25%
Unit weight, lb/gal	10.63 for 25% NaOH
Design specific gravity	1.27
Solution pH	14
Maximum fluid temperature, deg.F	110°F
Working temperature, deg.F	>70°F
Minimum ambient air temperature, deg.F	70°F

3) Schedule: The following tanks shall be provided under this section. The manufacturer shall refer to the Plans for additional details regarding installation and operations conditions. The manufacturer shall confirm and provide documentation showing that all storage tanks supplied can be fit and installed within the existing building.

Description: Caustic Soda Storage Tank

Quantity	2
Capacity	905 gallon minimum
Chemical	25% Sodium Hydroxide
Nominal diameter, in.	64
Height Limitation	84 inches
Storage Conditions and Color	Indoor, Low UV Exposure, Natural Color
Access Requirements:	Minimum 17" Standard Cover
Connection Requirements:	See Plans
	2" 25% Sodium Hydroxide Inlet
	2" Combined Sodium Hydroxide Outlet & Drain
	3" Air Vent Outlet
	2" Overflow
	Ultrasonic Level Transmitter

© 2023 RH2 Engineering, Inc.

Tank Fittings

1. Threaded bulkhead fittings shall be provided for fittings located above the maximum liquid level or where specified on the plan. Self-aligning threaded bulkhead fittings shall be provided where fittings are located on tank dome or other curved surface, or as specified on the Plans. Fittings must be placed away from tank knuckle radius' and flange lines. The bulkhead fittings shall be constructed of PVC. Gaskets shall be a minimum of ¼-inch thickness material suitable for the chemical stored.

2. Bolted double flange fittings are required for fittings located below the maximum liquid level or where specified on the plan. Fittings must be placed away from tank knuckle radius' and flange lines. Bolted double flange fittings provide the best strength and sealing characteristics of any tank fitting available.

    a. The bolted flange fitting shall be constructed with one 150 pound flange, one 150 pound flange gaskets, and the correct number and size of all-thread bolts for the flange specified by the flange manufacturer. The flanges shall be constructed of PVC Type I, Grade I. Standard orientation of bolted double flange fittings shall have bolt holes straddling the principal centerline of the tank in accordance with ANSI/ASME B-16.5, unless otherwise specified. Gaskets shall be a minimum of ¼-inch thickness material suitable for the chemical stored. There shall be a minimum of four full thread bolts. The bolts will have bolt heads encapsulated in elastomer material. The encapsulated bolt shall be designed to prevent metal exposure to the liquid in the tank and prevent bolt rotation during installation. The elastomeric encapsulation shall fully cover the bolt head and a minimum of ¼-inch of the threads closest to the bolt head. The polyethylene shall be color coded to distinguish bolt material. Each encapsulated bolt shall have a gasket to provide a sealing surface against the inner flange. The bolt material shall be titanium for sodium hypochlorite applications; 316 stainless steel for sodium hydroxide (caustic) and all other chemical applications.

3. For sodium hypochlorite and sulfuric acid storage, Bolted One-Piece Sure Seal (B.O.S.S.), double flange fittings constructed of virgin polyethylene shall be supplied. Bolts will be welded to a common backing ring and encapsulated with polyethylene preventing fluid contact with the metal material. Flange will have one full face gasket to provide a sealing surface against inside tank wall. All materials shall be compatible with chemical service and as indicated in the fitting schedule above. For NSF/ANSI 61 certification, EPDM or Viton GF gaskets shall be supplied.

Tank Attachments and Accessories

- Level Sensors: All tanks shall be equipped by the supplier with ultrasonic level sensors. The level transmitter shall be Siemens Sitrans Probe LU or equal. The sensor mount location shall be per the Plans and supplier shall provide tank mounting system for sensor.

- Float Indicator: All tanks shall be equipped by the supplier with a reverse float level indicator. The level indicator shall be assembled to the tank and shall consist of a PVC float, indicator, polypropylene rope, perforated interior pipe, PVC roller guides, clear

© 2023 RH2 Engineering, Inc.

UV resistant PVC sight tube, and necessary pipe supports. The level indicator shall act inversely to the tank contents and shall not allow entrance of tank contents into the sight tube at any time. Indicator shall be neon orange color for visual ease for onsite operators.

- Seismic Restraint System: All tanks shall be equipped with seismic restraints. The restraint system must meet the requirements of the IBC's most current edition. The complete system shall be constructed of 316 stainless steel materials. Stamped engineering calculations by a registered structural engineer in the State of Oregon shall be submitted as part of the submittal review process. The Contractor shall install per the manufacturer's recommendations. Tank manufacturer must provide finite analysis proving that the tank can withstand the structural loads implied.
- Ladders: All tanks greater than 6 feet shall be supplied with a ladder. Ladders shall be constructed of fiberglass with 316 stainless steel or better hardware; all ladders shall be designed to meet the State and Federal Occupational Safety and Health Agency (OSHA) Standards, including OSHA 2206;1910.27. Ladders must be mounted to the tank to allow expansion and contraction due to temperature and loading changes. Mild steel parts are not acceptable.
- Down Pipes: Tank(s) shall be provided with a dip tube style overflow connection to prevent the escape of gases and chemical vapors. Tank shall be sealed to prevent the release of chemical vapors and gases. Overflow piping (internal and external) shall be tank supported at 6-ft max intervals using material compatible with the chemical stored in the product tank.
- Fill Pipes: Tank(s) shall be provided with a fill line that extends to within 12-inches of the floor to prevent splashing when filling the tank. The fill piping (internal and external) shall be tank supported at 6-ft max intervals using material compatible with the chemical stored in the product tank.
- Vents: Each tank must be properly vented for the type of material and flow rates expected. Vents must comply with OSHA 1910.106 (F) (iii) (2) (IV) (9) normal venting for atmospheric tanks or other accepted standard, or shall be as large as the filling or withdrawal connection, whichever is larger but in no case less than 1-inch nominal inside diameter. Tanks shall be vented outdoors and terminated with a screened elbow or tee fitting that will prevent rainwater or insect intrusion.
- Pipe Supports: All pipe support materials in contact with the chemical shall be compatible with the chemical being stored.
- Overflow switch: An overflow switch shall be installed on the overflow line at the exterior of the tank to provide alarming if the tank level overflows.

Spare Parts

Provide one (1) shelf spare ultrasonic level transmitter for each make/model installed. Shelf spare can be used to measure chemical level within temporary chlorination system tote tank.

Provide one (1) spare overflow switch for each make/model installed.

© 2023 RH2 Engineering, Inc.

Part 3 – Execution

Installation/Construction

Installation shall be in accordance with the manufacturer's recommendations.

Field Quality Control

1. Field testing shall be in accordance with the manufacturer's recommendations.
2. After installation of tank and all fittings, the tank shall be water tested by filling the entire tank with water and monitoring the tank, as well as all fitting connections, for at least 24 hours. Any leaks shall be corrected prior to acceptance. Following successful field tank testing as determined by the engineer, each tank shall be completely emptied, cleaned of all foreign material and dried. The tank shall be filled by the Contractor with the chemical to be stored and allowed to soak for 5 working days. Any leaks, as determined by the engineer or Owner, shall be corrected prior to placing the tank into service.

11.90 OTHER EQUIPMENT

11.95 Heating, Ventilating, and Air-Conditioning

[CSI 23 00 00]

11.95.05 Common Work for HVAC

[CSI 23 05 00]

Part 3 – Execution

Install HVAC units per strict conformance with manufacturer recommendations. Provide brackets and support frames to properly support the HVAC equipment meeting manufacturer requirements.

11.95.34 HVAC Fans

[CSI 23 34 00]

11.95.34.1 Wall Ventilators

[CSI 23 34 13]

Part 1 – General

Design and Performance Requirements

See Ventilator Schedule on Plans and Functional Control description for design and performance requirements.

Related Sections

- Division 17.53.2 - Cooling Thermostat
- Division 17.08 – HVAC Functional Control

© 2023 RH2 Engineering, Inc.

Submittals

Detailed information including specifications, sizing information, performance curves, dimensional drawings, accessories, and other information relevant to this project.

Part 2 – Products

Manufacturers

The following manufacturers are acceptable "or equals" unless otherwise noted.

- ACME
- Fantech
- Penn Ventilation

Accessories

Ventilator shall be provided with explosion proof motors if noted in the Plans.

Provide all accessories needed for a complete installation including wall and roof thimbles, back-guards, and mounting sleeves.

Finishes

In chemical rooms or other corrosive environments, all materials in contact with room air shall be fully resistant to corrosion from conditions present in the room.

Part 3 – Execution

Install per manufacturer recommendations.

Provide a disconnect switch for each unit.

11.95.80 Decentralized HVAC Equipment

[CSI 23 80 00]

11.95.81.26 Ductless Mini-Split System Air Conditioner

[CSI 23 81 26]

Part 1 – General

A. Ductless Mini Split System Heat Pump (mini split) shall meet all rated capacities and efficiencies stated on the plans.

Part 2 – Products

Manufacturers

A. Mini split shall be Mitsubishi PKA-A36KA7 & PUZ-A36NKA7 (36,000 BTU/H wall-mounted indoor unit and 36,000 BTU/H heat pump universal outdoor unit), or approved equal.

B. Mitsubishi – MIFH1 wireless receiver, or equal, to be included with interior heat pump unit.

© 2023 RH2 Engineering, Inc.

Thermostat

C. Mini split shall be provided with a wired remote thermostat to control heating and cooling set points.

Part 3 – Execution

Installation

Locate mini split as shown on the Plans. Provide structural support and vibration isolators for indoor ductless unit to hang from wall without any vibration issues. Mount outdoor unit on CMU wall as shown on the Plans.

Refrigerant Line Installation

Route refrigerant piping as shown on the plans. Provide pipe support as necessary to secure refrigerant lines to the wall or other structural components. Install refrigerant lines without unnecessary bends or high/low points. Provide insulation and insulation cover as recommended by the mini split system manufacturer.

© 2023 RH2 Engineering, Inc.

15.00 GENERAL

This division covers the work necessary for furnishing and installing mechanical appurtenances and accessories as described in these Specifications and shown on the Plans.

Sections in these specifications titled "*Common Work for . . .*" shall apply to all following subsections whether directly referenced or not.

15.05 Common Work for Mechanical

[CSI 33 05 00]

Part 1 – General

Summary

Provide the necessary piping, plumbing, fittings, and appurtenances to make all piping systems complete, tested, and ready for operation as specified herein and as shown on the Plans. Some fittings that are necessary for the complete piping system installation and operation may not have been shown. Provide fittings, pipe, and appurtenances necessary, whether shown on the Plans or not, to make all piping systems complete, tested, and ready for operation.

Some pipe supports, thrust blocking, and tie rods are not shown on the Plans. Provide pipe supports, thrust blocking, and tie rods for pipes as required by accepted design criteria to support and restrain the loads encountered.

Related Sections

- Division 1.81.30 Seismic Restraint and Anchorage
- Division 1.81.40 Pressure Ratings
- Division 1.81.50 Materials in Contact with Drinking Water
- Division 10.14.23 Panel Signage

References

All products in contact with drinking water to be low-lead (less than 0.25 percent) content in compliance with NSF/ANSI 372.

Submittals

Submittal information shall be provided to the Owner for the following items:

- Ductile iron pipe
- Ductile iron fittings
- Steel pipe and fittings
- Copper pipe and fittings
- ABS plastic pipe

© 2023 RH2 Engineering, Inc.

- PVC pipe and fittings
- Underdrain pipe
- Isolation valves
- Control valves
- Backflow prevention assembly and certification from DOH
- Floor drains and cleanouts
- Hose bibs
- Flow meters
- Level sensors
- Pressure gauges
- Other mechanical components listed in this division or required by the Engineer

Part 2 – Products

Materials

All valves, meters, hydrants, specialties, appurtenances, and other such mechanical and plumbing components that are of similar purpose shall be of a single manufacturer and model line. Do not "mix and match" unless specifically stated otherwise or allowed by the Engineer. The intention of this requirement is to maintain consistency across all components installed on the project for function, maintenance, aesthetics, and details of installation.

Part 3 – Execution

Field Quality Control

Pressure gauges used for testing and commissioning shall be in good working order and scaled appropriately for the test. Scale range shall not exceed 200% of the test pressure. For example, for a 250 psi test, the gauge scale shall not exceed 500 psi. The Owner has the right to reject any gauges that are suspect in their accuracy.

If any components that have been approved by the Owner are not rated for the specified system test pressure, remove or isolate those components during pressure testing in a method acceptable to the Owner. Said components must still be pressure tested in their permanent configuration at their individual test pressure rating.

Cleaning

Potable Water Systems

After preliminary purging of the system, chlorinate entire potable water system in accordance with AWWA C651 for flushing and disinfecting water mains, and in accordance with all other pertinent rules and regulations. Operate each valve during chlorination period to provide contact. Upon completion of sterilizing, thoroughly flush the entire potable water system at a velocity of 3 feet per second, allowing four complete exchanges of contents. Do not discharge chlorinated material to storm or surface water systems without thoroughly neutralizing the

© 2023 RH2 Engineering, Inc.

chlorine residual remaining in the water in accordance with AWWA C655 for field dechlorination.

For pipe and fittings that cannot be disinfected as described above, such as those used for final connections to live systems, swab or immerse in a 50 ppm chlorine solution.

After final flushing and before the water pipe is connected to or placed in service, the Contractor shall request that the Owner arrange to have samples collected for bacteriological testing. At least one sample will be collected from each branch of the pipe. A copy of the test results shall be delivered to the Contractor for review. The Contractor shall not connect the water pipe to the existing distribution system prior to acceptance of the bacteriological test by the Engineer.

The Owner will pay the laboratory fee for the initial bacteriological test. The Contractor will pay for future testing if the initial test results are unsatisfactory.

15.10 BURIED PIPE INSTALLATION

[CSI 33 05 05]

Part 1 – General

Site Conditions

Existing soils are unclassified except where specifically identified on the Plans or specification.

Part 3 – Execution

Preparation

Stringing of pipes in advance of pipelaying may occur but may not create a traffic hazard or block access to roads, driveways, or private property without approval from the local traffic authority and affected property owners. Pipe shall not be strung out more than two weeks in advance of installation. Any pipe or materials that will not be installed for two weeks must be stockpiled at a site procured by the Contractor or as provided in this contract.

Pothole ahead of pipe-laying a sufficient distance at known utility crossings and where noted on the plans to allow room to make vertical adjustments as necessary to avoid existing utilities. Should the Contractor fail to pothole identified utility crossings, any subsequent adjustments necessary shall not be cause for cost or time claim. If the area potholed is in a travelled area and will be reopened to traffic more than one day in advance of pipelaying through the zone, the hole shall be patched with hot or cold mix, the cost of which shall be incidental.

Provide the results of potholing to the Owner no less than two working days in advance of utility installation. Provide a written record of size, materials, and locations for found utilities to an accuracy of 0.5 foot horizontal and 0.1 foot vertical. Failure to record locations clearly and legibly will result in non-payment.

Installation

Install pipes to the depth shown on the trench detail, unless superseded by depth shown on the profile. Unless specified otherwise, install pipe to the following tolerances:

© 2023 RH2 Engineering, Inc.

- Pressure pipes: 0.5 feet horizontal, 0.2 feet vertical. Regardless of vertical tolerance, do not create new high points not otherwise shown on the plans.
- Gravity pipes: 0.5 feet horizontal, 0.03 feet vertical. Regardless of vertical tolerance, do not lay pipe with reverse slope.

All non-metallic pipe, including service and air valve lines, shall include a tracer wire taped every 5 feet to the top of the pipe. Loop tracer wire to the surface in accessible locations such as valve boxes, meter vaults, or other surface access. If no access is available for more than 1,500 feet, provide a valve box specifically for the tracer wire. Wire shall be solid UF, 12AWG minimum for 2,000 foot runs and less, or 10AWG for runs longer than 2,000 feet.

Keep openings in pipe closed during the progress of work. Install plugs to prevent water and debris from entering pipe. No payment will be made to clean pipes.

15.11 Open Trench Pipe Installation

[CSI 33 05 05]

15.11.11 Pressure Pipe Installation

[CSI 33 05 05]

Part 1 – General

References

Use materials and installation methods in accordance with the latest edition of the Uniform Plumbing Code and local codes and regulations that are applicable.

Scheduling

Connections to live mains shall be made only after contacting the Owner 48 hours prior (not including weekends or holidays). Connections to live mains may only be performed on Tuesdays, Wednesdays, or Thursdays unless permission is obtained otherwise from the Owner. Connections shall not be performed on Owner recognized holidays.

Service to customers shall not be interrupted for more than 8 hours and must occur between the hours of 8:00 AM and 5:00 PM. The Owner will notify customers no less than 24-hours in advance of service interruption. If, in the opinion of the Owner, the Contractor has not adequately scheduled the work to occur within these timeframes, the Owner may cancel the service interruption. No time or monetary compensation will be provided for such cancellation.

Part 3 – Execution

Installation

Install pipes in accordance with the manufacturer's recommendations. Use types and sizes of pipes as specified herein and/or as shown on the Plans. Where small pipe sizes are omitted from the Plans and not mentioned in the specifications, use sizes corresponding to code requirements and as required by equipment and plumbing fixtures and appurtenances. Properly size any undesignated pipe sizes for the functions to be performed.

© 2023 RH2 Engineering, Inc.

Lay pipe and supports at proper lines and grades. Follow the piping runs shown on the Plans as closely as possible, except for minor adjustments to avoid architectural and structural features. Make major relocations, if required, in a manner acceptable to the Owner.

Keep openings in pipes closed during progress of work.

Form thrust blocking so that bolts, joints, gaskets, and flanges of adjacent joints are clear of concrete allowing bolts and joints to be dismantled without removing concrete. All concrete blocking shall have a minimum compressive strength of 4,000 psi unless identified otherwise in Division 3 or on the Plans.

Pipe passing through concrete walls or slabs shall be made watertight.

Trenches shall be excavated to a sufficient width to allow for pipe installation, compaction equipment, and shoring when necessary. Maximum trench width shall not exceed 36-inch plus OD for 4-inch and larger pipe, or 24-inch plus OD for 3-inch and smaller pipe for pay items or related materials including but limited to crushed surfacing, patching, import bedding, import backfill, and rock excavation.

Bedding shall be mechanically compacted in lifts no greater than 8-inches from base to springline and from springline to top of pipe using a jumping jack or sheepsfoot. Hoe-packs, sheepsfoots, and vibratory rollers shall not be used within 12-inches directly above the pipe. Compact trench backfill in lifts not exceeding 18-inches loose-thickness.

Flanged Joint Assembly

1. Bolt holes of flanges shall straddle the horizontal and vertical centerlines of the pipe. Clean flanges by wire brushing before assembling. Clean flange bolts and nuts by wire brushing; lubricate bolts with graphite or oil.
2. Insert the nuts and bolts (or studs), finger tighten, and progressively tighten diametrically opposite bolts uniformly around the flange to the proper tension. Bolts shall have minimum of two threads showing beyond the nut.
3. Tighten joints carefully to prevent strain upon valves, pumps, and other equipment.
4. If flanges leak under pressure testing, loosen or remove the nuts and bolts, reset or replace the gasket, reinstall or re-tighten the bolts and nuts, and retest the joints. Replace the gasket if damaged.

Field Quality Control

Make no permanent connections to the existing water system until the new water main has been tested and approved by the Owner. No temporary connections of the untested, unapproved new water main to the existing water system shall be made without the installation of a double check valve assembly between the new water main and the existing water system. The Contractor shall verify the size, material, and location of the existing main at the connection point prior to installing the new water main.

The Contractor shall provide all labor and equipment for earthwork, traffic control, trench safety, and materials for connections. The Contractor will provide the labor to make the final connection to the existing water system.

© 2023 RH2 Engineering, Inc.

15.11.41 Storm Drain Installation

[CSI 33 05 05]

Storm drains shall be installed in accordance with WSDOT Section 7-04.

15.11.50 Trench Patching

[CSI 32 01 17]

Part 1 – General

Scheduling and Sequencing

The Contractor shall be required to patch all trenches installed within the existing pavement with Commercial Hot Mix Asphalt to the depth as shown in the Plans. Trench patches shall be installed no later than the second Friday following excavation for trenches parallel to the road, and no later than two days following excavation for trenches crossing the road and across intersections.

Maintenance

Crushed surfacing used for temporary patching shall be inspected and repaired continuously, including over weekends and other non-working periods. Temporary patching, regardless of material used, shall be incidental to the project cost. No additional payment will be made.

Part 3 – Execution

Field Quality Control

Pavement patching that must be removed and replaced due to any failed testing will not warrant additional payment.

15.13 Above Grade Mechanical Installation

15.13.02 Exposed Piping Installation

[CSI 40 05 05]

Part 1 – General

Summary

This section is for exposed major pressure pipe systems such as booster stations, lift stations, treatment facilities, control valve vaults, etc. Testing of minor service plumbing systems shall follow the IPC/UPC.

Part 3 – Execution

Installation

When systems include drain ports that operate automatically, provide ancillary drainage plumbing. Route pilot, air valve, pump seal, and other drains to the structure drain using schedule 40 PVC with diameter equal to the device drain outlet diameter, but no smaller than ½-inch. Copper pipe may be used only with Owner approval. Multiple drain lines may be

© 2023 RH2 Engineering, Inc.

connected together if approved by the Owner. Secure to fixed structures or large pipe using pipe clamps. Do not install drain pipe where it will be a tripping hazard or interfere with normal maintenance. Slope downwards to termination. Terminate the outlet two times the drain pipe diameter above the drain grate or funnel and cover end with #24 stainless or aluminum screen. Install a union near the start of each drain pipe to allow disassembly without cutting.

Preparation

Provide all personnel and equipment required and complete all tests required to demonstrate the integrity of the finished installation for the approval of the Owner and all agencies having jurisdiction.

Secure the pipe and fittings to prevent movement under pressure. Furnish and install temporary blocking where permanent blocking is not required and remove it after testing.

All pumps, gauges, plugs, saddles, corporation stops, miscellaneous hose and piping, and other equipment necessary for performing the test shall be furnished and operated by the Contractor. Gauges used in the test may be required by the Owner to be certified for accuracy at a laboratory.

Tests/Inspection

Hydrostatic Pressure Testing

Test all water systems and appurtenances with a hydrostatic test pressure equal to that specified under Division 1.81.40 of these Specifications. The Owner has the right to require more stringent test criteria than stated in this specification or in the pressure rating section the Owner determines that field conditions warrant such measures.

Fill the piping systems with water and allowed to stand under pressure for a minimum of 24 hours to allow air to escape and allow the lining of the pipe to absorb water. The Owner will furnish the water necessary to fill the pipelines for testing purposes at a time of day when sufficient quantities of water are available for normal system operation. The Contractor is responsible for the proper disposal of any waste, including water.

Visible leakage is unacceptable and shall be corrected. Should the test section fail to meet the specified pressure test successfully, the Contractor shall locate and repair the defects and then retest the pipeline at his own expense.

Prior to calling out the Owner to witness the pressure test, the Contractor shall have all equipment completely set up and ready for operation and shall have successfully performed the test to assure that the pipe is in a satisfactory condition. The Owner shall witness the test. If the test does not pass inspection for any reason, additional trips required to witness another test shall be done at the Contractor's expense.

Before applying the specified test pressure, expel air completely from the system.

The test shall be accomplished by pumping the piping system up to the required pressure; stop the pump for a minimum of 15 minutes up to a maximum of 60 minutes as directed by the Owner, and then pump the system up to the test pressure again. During the test, the section being tested will be observed to detect any visible leakage. A clean container shall be used for

© 2023 RH2 Engineering, Inc.

holding water for pumping pressure on the system being tested. This makeup water shall be sterilized by the addition of chlorine to a concentration of 50 mg/l (ppm).

Sections to be tested shall be isolated and pumped to test pressure. Test pressure shall be sustained for a minimum of 60 minutes with no loss in pressure throughout the test duration with Owner present and on site throughout test duration. If test results show drop of pressure, Contractor shall repair leaks and retest until testing is passed in presence of Owner. Owner shall bleed off pressure from pump to piping connection once test is passed to verify system piping was tested.

15.18 Buried Piping Inspection and Testing

[CSI 33 05 05]

15.18.02 Buried Pressure Pipe Inspection and Testing

[CSI 33 05 05, 33 05 05.31]

Part 3 – Execution

The water main pipes shall be satisfactorily disinfected, purged and tested before being placed in service. All water for testing and disinfecting must be obtained by the Contractor by arrangement with the City. All pumps, gauges, plugs, saddles, corporation stops, miscellaneous hose and piping, and measuring equipment necessary for performing the test shall be furnished, installed and operated by the Contractor. When testing, "feed" for the pump shall be from a barrel or other suitable container, wherein the actual amount of "makeup" water can be measured periodically during the test period.

The pipeline shall be backfilled sufficiently to prevent movement of the pipe under pressure. All concrete blocking shall be in place and time allowed for the concrete to cure before testing. Where permanent blocking is not required, the Contractor shall furnish and install temporary blocking.

The pipeline shall be subjected to a hydrostatic pressure test and leakage test as specified in WSDOT Standard Specifications 7-09.3(25) and disinfected in accordance with WSDOT Standard Specifications 7-09.3(24). The hydrostatic and leakage tests shall be completed, to the City's satisfaction, only after the City has approved compaction reports provided by the Contractor. Following the successful completion of pressure testing, water mains larger than 8 inches in diameter shall be cleaned through the use of poly pigs as indicated below or as directed by the City:

A. A representative of the City shall be present to witness all poly pigging of water mains.

B. The poly pig used shall be appropriately sized for the water main to be cleaned and shall be constructed of a bare durafoam (a tough, high-density polyurethane foam) that is capable of mild scraping and cleaning of residue in new water mains.

C. The Contractor shall prepare a poly pigging plan and submit it to the City Engineer for approval prior to testing.

D. The poly pig shall be inserted into the main via a poly pig launch at the locations shown in the approved plan.

© 2023 RH2 Engineering, Inc.

E. When the poly pig is removed, all debris collected in front of the poly pig shall be removed and disposed of in accordance with all local, state, and federal regulations.

F. If required by the City, the Contractor shall use a "cleaning poly pig" that has a tough coat of polyurethane synthetic rubber applied in a criss-cross pattern. The "cleaning poly pig" shall be launched and debris shall be removed as previously described for poly pigging.

G. Water used to propel the poly pigs shall be obtained from the City via a nearby fire hydrant with the use of approved backflow prevention and/or required metering devices.

H. When the City determines that the main is clean of debris and organic matter, the water main shall be disinfected in accordance with these specifications.

I. Fees for water usage that is supplied by the City's water system shall be as determined by the City.

The water system will not be acceptable to the City until a satisfactory test report for bacteriological analysis is received from the DOH or other certified independent laboratory.

Chlorinated water used for disinfection shall be discharged in strict compliance with regulatory guidelines and requirements. The contractor shall be responsible for procuring all permits, making adequate provisions, and incurring all costs in this regard, to include, but not be limited to, City approval of point and method(s) of discharge, hoses, trenching, hauling, etc.

An acceptable test of pipe and fittings buried under or adjacent to concrete slabs or other structures must be performed prior to construction of the structure.

The Owner will furnish the water necessary to fill the pipelines and for testing at a time of day when sufficient quantities of water are available for normal system operation.

15.18.03 Valve Testing

Part 3 – Execution

Testing

All valves shall be pressure tested. Do not exceed the rated working pressure of the valve when operating the valve. Bleed off test pressure prior to operating. Check all valve bonnet fasteners for tightness.

Pre-Installation

All buried butterfly and eccentric valves shall be pressure tested outside the trench on both sides of the closed seat.

Valve clusters shall be pre-assembled and tested as a unit. Provide end plugs, blind flanges, assembly kits, and all appurtenances necessary for pressure testing. Valve testing shall use the following procedure.

1. Close the valve.
2. Install plug or flange (with test port).
3. Connect test apparatus and pump.

© 2023 RH2 Engineering, Inc.

4. Pressurize to test pressure. 250 psi for gate valves, 150 psi for butterfly and eccentric valves, or manufacturer's listed test pressure if less.
5. There shall be zero drop in pressure or visible leakage for one minute. This includes leaking through the shaft packing.
6. If test fails, check for defects, correct, and retest. Valves that do not pass testing will be replaced by the Contractor at no additional cost to the Owner.

Post-Installation

Test all valves for water tightness under differential working pressure. To perform this test, pressurize pipe section with valve in place, close valve and relieve pressure on seat side of the valve. The valve shall not pass water during a 5-minute test period.

Operate all valves at least once from closed-to-open-to-closed positions while valve is under working (not test) pressure.

15.20 PIPE AND FITTINGS

15.21 Common Work for Pipe and Fittings

[CSI 33 05 00 or 40 05]

Part 2 – Products

Components

Under no circumstance shall the fasteners be of lesser strength or higher corrosive potential than the materials being connected. If dissimilar metals are adjacent (for example: stainless steel flange connecting to ductile iron flange) a dielectric insulation kit shall be used.

Fasteners for pipe and fittings: Per AWWA standards unless otherwise specified. All relevant subsections of AWWA C100, C200, and C500. All bolts and studs shall be long enough so that no less than two threads extend beyond the face of the nut. Non-submerged flange bolts to be ASTM A307 Grade A, zinc plated.

For submerged conditions, connection bolts shall be Nitronic 60 steel. Nuts and washers shall be Stainless Steel, minimum grade 304 in raw domestic or treated domestic water and minimum grade 316 in treatment processes and sewage applications. Minimum grade 317 for acidic transport. Bolts and nuts shall meet ASTM F593 and F594. Stainless steel shall not be used where in contact with chlorine or chlorine solutions. Stainless steel bolts may be used in lieu of Nitronic but must be assembled using appropriate lubricant or tape. For installations in domestic water, lubricant, or tape must be approved for domestic water service. Cobas Stainless Steel Thread Sealing Tape or approved equal.

Finishes

For conditions other than submerged, all nuts and bolts shall be zinc plated, and suitable for above and below grade locations as required. Where above grade/exposed piping is specially coated, the connecting nuts and bolts shall be coated using the same system unless directed otherwise by the Owner.

© 2023 RH2 Engineering, Inc.

Part 3 – Execution

Construction

All piping and related equipment to be joined shall be connected as shown on the Plans, specifications, as recommended by the manufacturer or as required by standard industry practices if not otherwise specified.

Stainless steel threads shall be protected against galling using steel thread sealing tape equal to Cobas steel thread sealing tape. Tape shall be specific to the steel type used.

15.21.02 Shackle (Threaded Rod) Restraints

[CSI 33 05 09.33]

Part 1 – General

Definitions

Anchor fastener: The item which connects to the fitting and which the shackle rod passes through. Such as a 90° eye bolt or shackle plate.

Weathering steel: Steel alloy designed to resist corrosion. Often referred to using the genericized trade name Cor-Ten.

Design Criteria

Unless shown otherwise on the plans, use the following shackle rod sizes for 250 psi test pressure.

Pipe Size	Minimum Number (#) and Diameter of Rods		
	Undocumented steel or SS (30 ksi minimum yield)	SS cold drawn (35 ksi minimum yield)	Weathering Steel (45 ksi minimum yield)
4”	(2) at ½”	(2) at ½”	(2) at ½”
6”	(2) at ¾”	(2) at ¾”	(2) at ¾”
8”	(3) at ¾” or (2) at 1”	(3) at ¾” or (2) at 1”	(2) at ¾” or (2) at 1”
10”	(5) at ¾” or (3) at 1”	(4) at ¾” or (2) at 1”	(3) at ¾” or (2) at 1”
12”	(7) at ¾” or (4) at 1”	(6) at ¾” or (3) at 1”	(4) at ¾” or (3) at 1”
Contact Engineer for other sizes or pressure.			

Submittals

Provide submittal for anchor fastener which includes strength rating in pounds. For shackle plates, include dimensional drawing.

For high strength rods (cold drawn or weathering steel), provide submittals showing rod material and yield strength.

© 2023 RH2 Engineering, Inc.

Part 2 – Products

Components

Anchor fasteners must be a steel alloy. Ductile iron, cast iron, or any material deemed brittle in the opinion of the Owner are not allowed.

Verify anchor fastener is appropriate for anchor location.

All buried shackled thrust restraint systems shall be stainless steel or weathering steel. Exposed shackles, such as in a vault or mechanical room, may be non-weathering steel but if so, must be coated with epoxy paint system. Clean rust prior to painting.

Material (* = weathering steel)	Yield Strength	Corrosion Resistant
Type 304/316 SS	Low (30 ksi)	Yes
ASTM A36	Low (36 ksi)	No
ASTM A588 *	Med (45 ksi)	Yes
ASTM A709 GR 50W *	Med (50 ksi)	Yes
ASTM A242 *	Med (50 ksi)	Yes
ASTM A307	High (60 ksi)	No
ASTM F3125 A325 Type 1	High (90 ksi)	No
ASTM F3125 A325 Type 3 *	High (90 ksi)	Yes

All components of any stainless steel or weathering steel system shall include only stainless steel or weathering steel components. Bolts, nuts, washers, rods, and other components shall be one material and not intermixed.

Shackle systems must provide a mechanism to prevent unthreading. Exposed shackles shall use double nuts. Buried shackle systems may use double nuts, single nut with tack weld, or single nut with center punch on outside rod thread.

Provided washers at anchor fasteners. Install anchor fasteners on the opposite side of the flange or mechanical joint from the rod.

Part 3 – Execution

Installation

For standard elongation restraint, space shackles roughly equally around the pipe.

When restraint is intended to allow deflection movement without expansion, such as at a pump or tank connection, concentrate rods along the neutral axis of deflection. In other words, if vertical deflection is allowed, place rods along horizontal axis. Confirm proper orientation with Owner.

Nuts shall be finger tightened to snug, then tightened by wrench one full turn. Do not overtighten.

© 2023 RH2 Engineering, Inc.

Field Quality Control

For high strength rod, labels from packaging showing rod material must be given to the Owner in the field. If package labels are not available, Owner has the right to assume rods are not high strength and may require installation of additional rods and field coating.

15.22 Metal Pipe and Fittings

15.22.02 Ductile Iron Pipe and Fittings

[CSI 33 05 19 or 40 05 19]

Part 1 – General

Design Requirements

Ductile iron pipe shall have thickness designed in accordance with ANSI/AWWA C150/A21.50 and shall be based on laying conditions and internal pressures to meet the requirements of the City of Bonney Lake.

The pipe thickness shall not be less than that of Class 52 pipe.

Part 2 – Products

Manufactured Units

Pipe shall be cement-lined and asphaltic coated in accordance with ANSI Standard A21.4 (AWWA C104) unless otherwise specified and shall conform to ANSI Standard A21.51 (AWWA C151).

Rubber gasket pipe joints are to be push-on-joint (Tyton) or mechanical joint (MJ) in accordance with ANSI Standard A21.11 (AWWA C-111), unless otherwise specified.

Flanged joints shall conform to ANSI Standard B16.1.

When requested, furnish certification from the manufacturer of the pipe and gasket being supplied that inspection and all of the specified tests have been made, and the results comply with requirements of this standard.

The Owner shall approve the manufacturer of ductile iron pipe. Preapproved manufacturers are:

- Pacific States Cast Iron Pipe Company
- Griffin Pipe Products Company
- United States Pipe and Foundry

<u>Ductile Iron Fittings</u>

All fittings shall be ductile iron where possible. Steel fittings will not be accepted where ductile iron is called out on the plans. Ductile iron fittings shall be short-body, cement-lined, and for the pressure rating noted in Division 1.81.40. Metal thickness and manufacturing processes shall conform to applicable portions of ANSI Standards A21.20, A21.11, B16.2, and B16.4.

Standard cement lining shall be in accordance with ANSI Standard A21.4 (AWWA C104).

© 2023 RH2 Engineering, Inc.

Mechanical joint (MJ), ductile iron, compact fittings 3-inches through 24-inches, and 54- inches through 64-inches shall be in accordance with AWWA C153.

Flanged pipe spools shall be fabricated from minimum Class 53 wall thickness pipe and conform to ANSI/AWWA C115/A21.15 with the exception that flanges shall be fabricated from ductile iron unless otherwise specified in the Contract Documents. Interior shall be cement lined.

Ductile iron flange (FL) fittings shall be in accordance with AWWA C110 and fabricated from ductile iron unless otherwise specified in the Contract Documents with a bolt pattern to match adjacent pipe. Gasket material for flanges shall be Styrene Butadiene Rubber (SBR, Buna-S), neoprene, nitrile rubber (NBR, Buna-N), chlorinated butyl, or cloth-inserted rubber. Gaskets full-face type. Gaskets shall be a minimum ⅛-inch thick.

Type of ends shall be specified as mechanical joint (MJ), restrained joint (RJ), plain end (PE), or flanged (FL). All restrained joint shall be true restrained joint.

Finishes

For above grade and exposed pipes, including those inside structures, prepare surfaces and coat the exterior per Division 9.91.13.13.

Part 3 – Execution

Installation

Install ductile iron water mains in accordance with AWWA C600. Provide tools and equipment, including any special tools required for installing each type of pipe used.

The amount of deflection at each pipe joint shall not exceed 3-degrees per joint (11 inches over 18 feet), or the manufacturer's printed recommended deflections, whichever is less.

15.22.03 Steel Pipe and Fittings

[CSI 33 05 24.23 or 40 05 24.23]

Part 1 – General

References

Unless otherwise stated, the latest edition for any commercial standards and all manufacturing tolerances referenced therein shall apply.

- ANSI/AWS D1.1 Structural Welding Code- Steel
- ANSI/AWS B2.1 Specification for Welding Procedure and Performance Qualification
- ANSI/AWWA C200 Steel Water Pipe—6 In. (150 mm) and Larger
- ANSI/AWWA C205 Cement-Mortar Protective Lining and Coating for Steel Water Pipe – 4 In. (100 mm) and Larger- Shop Applied
- ANSI/AWWA C206 Field Welding of Steel Water Pipe
- ANSI/AWWA C207 Steel Pipe Flanges for Waterworks Service—Sizes 4 In. Through 144 In. (100 mm through 3,600 mm)

© 2023 RH2 Engineering, Inc.

- ANSI/AWWA C208 Dimensions for Fabricated Steel Water Pipe Fittings
- ANSI/AWWA C209 Cold-Applied Tape Coatings for the Exterior of Special Sections, Connections, and Fittings for Steel Water Pipe
- ANSI/AWWA C210 Liquid-Epoxy Coating Systems for the Interior and Exterior of Steel Water Pipelines
- ANSI/AWWA C214 Tape Coating Systems for the Exterior of Steel Water Pipelines
- ANSI/AWWA C215 Extruded Polyolefin Coatings for the Exterior of Steel Water Pipelines
- ANSI/AWWA C216 Heat-Shrinkable Cross-Linked Polyolefin Coatings for the Exterior of Special Sections, Connections, and Fitting
- ANSI/AWWA C218 Liquid Coating Systems for the Exterior of Aboveground Steel Water Pipelines and Fittings
- ANSI/AWWA C222 Polyurethane Coatings for the Interior and Exterior of Steel Water Pipe and Fittings
- ASME Section IX International Boiler & Pressure Vessel Code: Welding and Brazing Qualifications
- ANSI/ASME B36.10 Welded and Seamless Wrought Steel Pipe
- AWWA M11 Steel Water Pipe: A Guide for Design and Installation

Design Requirements

Pipe

Pipe thickness as necessary to meet the pressure requirements in Division 1.81.40, and as follows:

1. Buried piping shall have a minimum pipe thickness of 0.25-inches.
2. Aboveground piping shall be Standard Weight or greater Schedule as required for the pressure requirements.

Construct welded steel pipe in accordance with the ASME Welding Code and as shown in the Plans. Steel pieces shall be constructed as dimensioned to exact tolerances of ± 3/32-inch.

Construction steel pipe in accordance with AWWA C200. Steel pipe shall be fabricated from steel manufactured to meet the requirements of ASTM A53, Type E or S, minimum Grade B. Design stress shall be half the yield stress of the steel. All longitudinal and girth seams, whether straight or spiral, shall be butt-welded using an approved electric-fusion-weld process.

Buried piping shall be furnished principally in 50-feet net laying lengths with shorter lengths, field trim pieces and closure pieces as required by plan and profile for location of elbows, tees, reducers and other in-line fittings or as required for construction.

Where grooved joints are used, pipe thickness shall be modified accordingly to maintain the hydrostatic test pressure compliance.

© 2023 RH2 Engineering, Inc.

Aboveground steel pipe and fittings 26 inches in diameter and smaller shall conform to ANSI Standard D36.10.

Fittings

Unless otherwise shown on the Plans, all specials and fittings shall conform to the dimensions of AWWA C208. Pipe material used in fittings shall be of the same material and pressure class as the adjoining pipe.

Buried elbows shall have a minimum radius equal to 2½ times the pipe diameter and the maximum miter angle on each section of the elbow shall not exceed 11¼-degrees (one cut elbow up to 22 ½-degrees). Aboveground elbows shall have a radius equal to 1 times the pipe diameter. If elbow radius is less than 2½ times the pipe diameter, stresses shall be checked per AWWA M11 and the pressure class increased if necessary.

Specials and fittings, unless otherwise shown on the Plans, shall be made of segmental welded sections from hydrostatically tested pipe, with ends compatible with the type of joint or coupling specified for the pipe. All welds made after hydrostatic testing of the straight sections of pipe shall be tested per the requirements of AWWA C200 Section 5.2.2.1.

Joints

Rolled Groove or Carnegie Rubber Gasket Joint

1. The standard joint for buried piping shall be a rolled groove or Carnegie rubber gasket joint unless otherwise noted on the Plans. Joints and gaskets shall conform to AWWA C200 and as shown in Chapter 8 of AWWA M11.
2. The joint shall be suitable for a working pressure equal to the class of pipe furnished and shall operate satisfactorily with a deflection angle, the tangent of which is not to exceed 1.00/D where D is the outside diameter of the pipe in inches with a pull-out of 1-inch.
3. Carnegie and rolled groove rubber gasket joints may be furnished only by a manufacturer who has furnished pipe with joints of similar design for comparable working pressure and pipe diameters that has been in successful service for a period of at least 5 years.

Lap Weld

1. Lap weld joints shall conform to AWWA C200 and as shown in Chapter 8 of AWWA M11.
2. Use lap field welded joints where restrained joints are required or indicated on the Plans. The standard bell shall provide for a 2 ½-inch lap. The minimum lap shall be 1-inch. The maximum joint deflection or offset shall be a 1-inch joint pull.
3. Lap welded joints shall be welded either externally or internally. Provide holdbacks for coating and linings as shown on the approved shop drawings. "Weld-after-backfill" of interior welds may be performed any time after joint completion and backfilling has been completed.

© 2023 RH2 Engineering, Inc.

4. Unless otherwise shown on the Plans, all field joints shall be lap welded for diameters 48-inches and greater. Joints on pipe less than 48 inches in diameter may be lap-welded, rolled groove or Carnegie rubber gasket joints.

Mechanical Couplings

1. Mechanical couplings where indicated on the Plans shall be Romac 400, Smith Blair Style 411, Baker Style 200, Victaulic Depend-O-Loc or equal.
2. Insulating mechanical couplings where indicated on the Plans shall be double insulated Romac IC400, Smith Blair Style 416, Baker Style 216, or equal for working pressures up to 150 psi only.
3. Couplings for buried service shall have all metal parts painted with epoxy paint and conform to AWWA C210.
4. Pipe ends for mechanical couplings shall conform to AWWA C200 and M11. The shop applied outside coating shall be held back as required for field assembly of the mechanical coupling or to the harness lugs or rings. Paint harness lugs or rings and pipe ends with one shop coat of epoxy conforming to AWWA C210.
5. Pipe for use with sleeve-type couplings shall have plain ends at right angles to the axis.

Flanges

1. Steel flanges smaller than 4-inch per ANSI B16.5, Class 150 or Class 300. Steel flanges 4-inches and larger per AWWA C207. All flanges rated for the specified working and hydrostatic testing pressures, but in no case shall be less than Class D. Supply documentation that flanged ends welded to the steel pipe and welded pieces are capable of the hydrostatic testing pressure.
2. Shop lining and coating shall be continuous to the end of the pipe or back of the flange. Flange faces shall be shop coated with a fusion bonded epoxy coating.
3. Gaskets shall be 1/8-inch thick minimum. Fasteners per Division 15.21.

AWWA C207 Flanges			
Flange Class	Diameter	Working Pressure	Maximum Test Pressure
D	4-inch to 12-inch	175 psi	218 psi
D	14-inch and larger	150 psi	187 psi
E	4-inch and larger	275 psi	343 psi
F	4-inch and larger	300 psi	375 psi

Submittals

Shop drawings and calculations shall be submitted to the Engineer for review and approval prior to material order, including:

1. Wall thickness and diameter. Calculations for pipe design and fittings reinforcement and/or test data.
2. Layout showing the overall system with all major dimensions, stations, and elevations. Each piece shall be identified by mark number referenced to a pipe laying schedule and detail sheet.

© 2023 RH2 Engineering, Inc.

3. Details of standard pipe, joints, specials, and fittings.
4. Calculations, details, and locations of joint restraint for thrust restraint.
5. Details of joint bonding and field welded joint restraint calculations.

The Contractor shall submit previous experience of a minimum of five steel welding projects similar to this one. If requested by the Owner, supply specification of previous projects and written documentation that the construction met the specification.

Part 2 – Products

Source Quality Control

Pipe cylinders, lining, coating, and fabrication of specials shall be the product of one manufacturer that has not less than 5 years successful experience manufacturing pipe of the type and size indicated. For projects containing 1,000 lineal feet or less of buried steel piping or for project involving both aboveground and buried steel piping, the products of up to two different manufacturers provided that each has not less than 5 years successful experience manufacturing pipe of the particular type and size indicated.

The pipe manufacturer must have a certified quality assurance program, ISO 9001:2000 or other equivalent nationally recognized program as approved by the Owner.

Welds shall be constructed in accordance with ASME Welding Code. The Contractor shall be responsible for compliance to this tolerance and correct any dimensions or welding that does not meet this specification at their expense.

All pipe shall be subject to inspection at the place of manufacture in accordance with the provisions of AWWA C200 and AWWA coating and lining standard as supplemented by the requirements herein.

Except as modified herein, all materials used in the manufacture of the pipe shall be tested in accordance with the requirements of AWWA C200 and AWWA coating and lining standards.

The Contractor shall perform required tests at no additional cost to the Owner. The Engineer shall have the right to witness all testing conducted by the Contractor. The Contractor shall provide a minimum of 48 hours advance notice of any testing.

All welding procedures used to fabricate pipe shall be qualified under the provision of AWS B2.1 or ASME Section IX.

Skilled welders, welding operators, and tackers who have had adequate experience in the methods and materials to be used shall do all welding. Welders shall maintain current qualifications under the provisions of AWS B2.1 or ASME Section IX. Machines and electrodes similar to those in the work shall be used in qualification tests. The Contractor shall furnish all material and bear the expense of qualifying welders.

Internal bracing shall be provided for shipment if needed to maintain pipe shape.

Finishes

Aboveground Steel Pipe and Fittings: Lining and coating per Division 9.90.

Buried Steel Pipe and Fittings: Provide lining and coatings as follows:

© 2023 RH2 Engineering, Inc.

Liquid-Epoxy Lining

1. Liquid-epoxy lining shall be per AWWA C210 to a minimum thickness of 16 mils, measured in accordance with SSPC-PA 2. Lining shall be continuous to the ends of the pipe except where field welding is indicated.
2. Lining repair shall be per AWWA C210 and manufacturer's recommendations.

Cement-Mortar Coating

1. All pipe shown on the Plans to be cement-mortar coated shall be coated with ¾-inch minimum thickness of reinforced cement-mortar coating per AWWA C205.

Part 3 – Execution

Installation

Buried piping shall be bedded and backfilled per the plan details or manufacturer's recommendations utilizing an E' value for design check per AWWA M11 Chapter 6.

Rolled Groove Rubber Gasket Joint

1. Clean, lubricate, and place gasket in grooved spigot and relieve tension by inserting a dull instrument under the gasket and completing at least two revolutions around the joint circumference.
2. Upon completion of insertion of spigot (including any angular deflection as shown on the approved shop drawing) and prior to releasing from slings, check the entire placement of the gasket with a feeler gauge per manufacturer's recommendations. If gasket has disengaged or rolled, immediately pull the joint apart and reinstall the joint with a new gasket if required. Again verify proper placement of gasket with feeler gauge.
3. Complete the interior of the joints with liquid epoxy per AWWA C210. Complete the exterior of the joints with heat-shrink sleeves per AWWA C216 and manufacturer's recommendations.

Lap Field Welded Joints

1. Clean exposed end of joint surfaces.
2. Provide a minimum overlap of 1-inch at any location around the joint circumference.
3. Field welders and field weld procedures shall be certified in accordance with AWS D1.1.
4. At the Contractor's option, provide a full fillet weld per AWWA C206 either on the inside or outside of the pipe. Inside welding may be performed after backfilling in accordance with manufacturer's recommendations.
5. Testing of field welds shall be in accordance with AWWA C206.
6. Complete the interior of the joints with liquid epoxy per AWWA C210. Complete the exterior of the joints with heat-shrink sleeves per AWWA C216 and manufacturer's recommendations.

© 2023 RH2 Engineering, Inc.

Field Quality Control

The Contractor shall provide tools and equipment, including any special tools required for installing each particular type of pipe used. Pipe that is out-of-round shall be reshaped using methods provided by the pipe manufacturer. The Engineer reserves the right to reject pipe that is excessively out-of-round or damaged during reshaping.

Testing

For potable water pipe, disinfect and purity test per Division 15.05.

Pressure test per Division 15.13 and 15.18.

15.22.04 Stainless Steel Pipe and Fittings

[CSI 33 05 23 or 40 05 23]

Part 1 - General

Related Sections

- Division 5.05 Common Work for Metals

Design Requirements

Welding shall withstand the hydrostatic testing pressure as stated in Division 1.81.40 without leakage.

The pipe wall thickness shall be as required by the following table.

Pipe Wall Thickness (inches)

	Nominal Pipe Diameter												
Working Pressure	1"	2"	3"	4"	6"	8"	10"	12"	14"	16"	18"	24"	30"
201 - 400 psi	0.179 (3)	0.218 (3)	0.300 (3)	0.337 (3)	0.432 (3)	0.500 (3)	0.500 (3)	0.500 (3)	0.500	0.500	0.500	0.500	0.625

(3) Per Schedule 80s

Part 2 - Products

Materials

All stainless-steel pipe and fittings shown on the Plans in direct bury applications shall meet ASTM A312, Type 304L or 316L, Welded. All heat tints and chromium depleted layers caused by welding shall be removed by pickling prior to on-site delivery.

Above-ground stainless steel piping and fittings shall meet ASTM A778 and A774 respectively, welded. ASTM A312 is also acceptable. Piping systems shall be pickled after welding and prior to on-site delivery. Fittings shall be beveled plain-end for welding, mechanical joint connection, or flange as shown on the Plans.

© 2023 RH2 Engineering, Inc.

Part 3 - Execution

Installation

Welding of pipe shall be per ASME Welding Code.

Passivate field welds per Division 5.05.

15.22.05 Galvanized Steel Pipe

[CSI 33 05 24.26 or 40 05 24.26]

Part 1 – General

Design Requirements

Galvanized steel pipe shall conform to ASTM A53/A53M. Hot dip galvanizing shall be completed in conformance with ASTM A123/A123M. Piping shall be sized as shown on the Plans and capable of the hydrostatic working and testing pressures as indicated in the pressure section above.

Part 2 – Products

Components

Wrap pipe if buried below grade. Provide dielectric couplings and bonding as shown on the Plans or as required by the Owner's standard details. Provide dielectric coupling or gasket bolt and washer kit for any connection between galvanized steel and brass, bronze or copper.

15.22.06 Copper Pipe and Fittings

[CSI 33 05 17 or 40 05 17]

Part 1 – General

Design Requirements

Copper piping and tubing shall meet the requirements of ASTM B-88. Solder fittings shall meet the requirements of ANSI B16.22. Flared fittings per ANSI B16.26 and allowed only for working pressure less than 150 psi. Lead content of solder shall be no more than 0.2 percent.

Part 2 – Products

Materials

Buried, not under structures:

Type K soft pipe with compression fittings (Ford Quick-Joint, Mueller 110, or equal).

Buried, under structures:

Type K soft pipe with compression fittings (Ford Quick-Joint, Mueller 110, or equal).

Type K hard pipe with soldered fittings.

© 2023 RH2 Engineering, Inc.

Exposed, interior:

Type K or L hard pipe with soldered fittings.

Soft pipe may be used only where approved by the Owner or shown on the plans. Soldered fittings for all sizes. Flared fittings only on 1/2-inch and smaller soft pipe.

Concealed, interior:

Type K or L hard pipe with soldered fittings.

Type K or L soft pipe with soldered fittings (any size) or flared (1/2-inch and smaller).

Fittings encased in concrete or CMU block: Soldered only.

Part 3 - Execution

Installation

Under structures, use unbroken pipe lengths to avoid fittings whenever possible.

Runs shall be parallel and perpendicular with floors and walls unless positive drainage is required. When Owner allows soft copper for exposed pipe, straighten any curved or bent pipe for straight sections longer than 6-inches.

15.22.08 Brass/Bronze Pipe and Fittings

[CSI 33 05 12 or 40 05 12]

Part 1 – General

References

Brass to be low-lead content in compliance with NSF/ANSI 372 to have no more than 0.25 percent lead content.

Brass nipples: ASTM B687

Brass fittings: ANSI/ASME B16.15 (threaded) Class 125 lb. (up to 200 psi water), 250 lb. (up to 400 psi water); B16.18 (soldered).

Part 2 – Products

Materials

Brass pipe, nipples, and fittings to have threaded ends.

All brass fittings shall be domestic brass and manufactured by Ford unless specified otherwise.

15.22.09 True Restrained Joint Pipe and Fittings

[CSI 33 05 09.33]

Part 1 – General

Related Sections

- Division 15.22.02 Ductile Iron Pipe and Fittings

© 2023 RH2 Engineering, Inc.

Design Requirements

Ductile iron pipe shall have thickness designed in accordance with ANSI/AWWA C150/A21.50 and shall be based on laying conditions and internal pressures to meet the requirements of Division 1.81.40 unless listed as more stringent below.

The pipe thickness shall not be less than that of Class 52 pipe.

Submittals

Submit layout drawings of all restrained sections.

Part 2 – Products

Manufactured Units

Fabricated Restrained Joint pipe (aka True Restrained Joint) shall be ductile iron manufactured in accordance with requirements of ANSI/AWWA C151/A21.51. Fabricated (True) Restrained Joint pipe shall be Griffin Pipe SnapLok, Pacific States Cast Iron Pipe Company Thrustlock, US Pipe TR-Flex, or approved equal.

<u>Ductile Iron Fittings</u>

Type of ends shall be specified as true restrained joint (TRJ) and be of the same brand and model as the adjoining pipe.

Finishes

For above grade and exposed pipes, including those inside structures, prepare surfaces and coat the exterior per specification Division 9.91.13.13.

Part 3 – Execution

Installation

Provide tools and equipment, including any special tools required for installing each particular type of pipe used.

Short lengths of TRJ pipe supplied by the manufacturer shall be used whenever possible to provide the proper spacing of valves, tees, or special fittings. After a restrained section has been assembled, the joints shall be extended to their full length prior to backfilling. The preferred method for TRJ pipe installation is to place the fitting or valve first, then lay TRJ pipe away from the fitting or valve. Any cuts necessary to close gaps shall be made on the adjoining standard push-on joint pipe, not on the restrained sections. Alternate methods for installation must be approved by the Owner. "Field Kits" will not be allowed unless prior approval is given by the Owner.

© 2023 RH2 Engineering, Inc.

15.23 Non-Metal Pipe and Fittings

15.23.05 PVC Pipe and Fittings – Solvent Weld

[CSI 33 05 31.13 or 40 05 31.13]

Part 2 – Products

Materials

Polyvinyl chloride (PVC) material for pipe fittings and couplings shall conform to ASTM D-1784, Type 1, Grade 1, with 2,000 psi design stress. Pipe shall be Schedule 40 or 80 in accordance with ASTM D-1785, as shown on the Plans.

All pipe shall be white unless shown otherwise on the Plans.

Part 3 – Execution

Installation

For exposed locations that will not be painted, primer and glue must be applied carefully and not allowed to run. Areas where primer/glue has run more than ¼-inch past the joint will be cleaned, painted, or replaced by the Contractor at the discretion of the Owner.

15.23.11 Underdrain Pipe

[CSI 33 05 27.23, 33 05 31.27, 33 05 33.33]

Part 1 – General

Design Requirements

Underdrain (or footing drain) pipe shall be perforated and may be one of the materials in the following list, at the option of the Contractor. If no filter fabric around the gravel sump is shown on the Plans, the pipe shall be provided with a full-length filter sock. Perforated underdrain pipe shall meet the following requirements:

- Corrugated aluminum alloy - AASHTO designation M-197;
- PVC plastic - ASTM D-1785, Schedule 40;
- Corrugated high-density polyethylene dual wall, AASHTO designation M-252. Equal to ADS N-12 dual wall perforated corrugated HDPE pipe.

If pipe materials above cannot be obtained with perforations from the manufacturer, the Contractor or supplier shall perforate the pipe with $^{1}/_{16}$-inch by 1-inch slots, or ½-inch diameter holes located at 2:00 and 10:00 at 4-inch spacing.

Provide and install fittings if pipe cannot be bent around curved structures without kinking or collapsing.

© 2023 RH2 Engineering, Inc.

Part 3 – Execution

Construction

Lay perforated pipe with perforations down, with bedding and backfill as indicated on the Plans. Use care in placing gravel backfill material to prevent its contamination. Compact backfill as identified on the Plans.

15.23.12 PVC Pipe for Drain, Waste, and Vent (DWV)

[CSI 22 13 16]

Part 2 – Products

Design Requirements

Polyvinyl chloride for drain waste and vent (PVC-DWV) material for pipe fittings and couplings shall conform to ASTM D-1784, Type 1, Grade 1, with 2,000 psi design stress. Pipe shall be Schedule 40 or 80 in accordance with ASTM D-1785 and D2665 as shown on the Plans. Pipe shall be dual labeled.

Cellular core PVC is not allowed.

Part 3 – Execution

Installation

Pipe bedding shall be clean granular material with no organics and no rocks larger than ½-inch for angular rock or ¾-inch for round-rock.

15.30 VALVES

15.31 Common Work for Valves

[CSI 40 05 51 or 33 14 19]

Part 1 – General

Design and Performance Requirements

Valves noted on the Plans or in other parts of the Specifications shall meet the requirements herein. Valves shall be designed for the intended service.

Valve suppliers shall review the design and certify that the valve provided in the submittal is appropriate for the application and will operate as shown and described. Any discrepancies from the design and the valves shall be brought to the Engineer's attention during the bidding process. Valves that do not operate as specified and per normal industry standards shall be replaced or modified so that they operate within the design parameters at the Contractor's expense.

Pressure rating shall be per Division 1.81.40 unless shown otherwise.

© 2023 RH2 Engineering, Inc.

Part 2 – Products

Components

If shear pins are installed with any valve, the manufacturer shall certify the shear pin(s) to fail between 95 to 99 percent of the operator shaft failure torque. Provide concrete supports for operators where required, as shown on the Plans.

Buried valves shall be equipped with an AWWA 2-inch wrench nut with a minimum of 10 turns required to close the valve, unless otherwise noted on the Plans. Exposed valves shall be equipped with lever actuator for valves 3 inches and smaller, or handwheel actuator for valves 4 inches and larger, unless otherwise noted on Plans. Valves located at elevations higher than 6 feet above the finished floor shall be equipped with chainwheel operator.

Buried valves where the operator nut is more than 3 feet below the valve box lid shall be provided with a solid shaft valve nut extension to reach between 18-inches and 30-inches of the ground surface. Extension shall attach to the nut with a set screw. Diameter of extension shall be appropriate for the valve size and length of extension, but under no circumstances shall be less than 1 inch for 4-foot-long extension rods, or 1.25 inch for rods longer than 4 feet. Extension shall function without excessive twisting.

Part 3 – Execution

Installation

Install valves in strict accordance with the manufacturer's instructions and as shown on the Plans. Verify alignment and adjustments after installation. Provide buried valves with all operators or valves boxes installed so that wrenches or operators perform freely and without binding or other interference. Bed and backfill buried valves according to the requirements of the pipe to which they are attached.

15.32 Isolation Valves

15.32.02 Resilient Wedge (Seat) Gate Valves

[CSI 40 05 61.23]

Part 1 – General

Design Requirements

All gate valves for water lines 3 inches and larger shall be of the resilient, wedge-type, and shall meet or exceed the performance requirements of AWWA C509 or AWWA C515-Reduced-Wall, Resilient-Seated Gate Valves for Water Supply Service, unless shown otherwise. Valves shall be suitable for installation with the type and class of pipe being installed. The wedge shall be fully encapsulated with vulcanized SBR rubber or EPDM. Ends as shown on the plans. Valve opening direction shall be counter-clockwise.

Buried valves shall have non-rising stem (NRS).

© 2023 RH2 Engineering, Inc.

Part 2 – Products

The Owner shall approve the manufacturer of resilient seat gate valves. Preapproved manufacturers are:

- M&H
- Waterous
- Clow
- Mueller

Part 3 - Execution

Field Quality Control

Where buried valves will be installed in a horizontal orientation and for buried valves 16-inch and larger in any orientation, operate the valve over the full range of travel in both directions prior to installation in the presence of the Owner to verify gate travels smoothly and without binding. Service or replace valves that do not travel smoothly.

Installation

Install valves in strict accordance with manufacturer's instructions and as shown on the Plans. Verify alignment and adjustments after installation. Provide buried valves with all operators or valve boxes installed so that wrenches and operators perform freely and without binding or other interference. Bed and backfill buried valves according to requirements of the pipe to which they are attached.

15.32.07 Gate Valves – Small Diameter

[CSI 40 05 61.13]

Part 2 – Products

Manufactured Units

Gate valves 2 inches and smaller for steel or brass pipe shall be Crane No. 438 or equal with non-rising stem, screwed bonnet, solid wedge disc, bronze construction and threaded ends.

Gate valves 2 inches and smaller for copper piping shall be Crane No. 1320 or equal with stem, screwed bonnet, solid wedge disc, bronze construction and solder or screw ends.

15.33 Check Valves

15.33.02 Swing Check Valves

[CSI 40 05 65.23]

Part 1 – General

Design Requirements

The swing check valve shall function to permit flow in only one direction. The valve shall close tightly, without slamming, when the pressure on the discharge side exceeds the pressure

© 2023 RH2 Engineering, Inc.

on the inlet side. All swing check valves shall conform with AWWA C508 and the following specifications.

The valve shall be constructed to withstand the pressures stated in Division 1.81.40. Flanges shall be drilled to ANSI B16.1, Class 250# or as specified in the Plans.

Operating pressure range is 0 psi (low) to 250 psi (high). The manufacturer shall certify that the check valve will seal completely within the operational range.

Part 2 – Products

Manufacturers

The valve shall be equal to Golden Anderson Fig. 220-US swing check valve or M&H Model 159 Swing Check Valve. Valve swing arm shall be weighted. Swing arm shall be oriented as shown on the plans. If not shown, swing arm shall be located to be free to move without restriction.

Manufactured Units

The swing check valve body shall be constructed with heavy cast iron or cast steel and have a bronze or stainless-steel seat ring, rubber clapper facing, a non-corrosive shaft and external counterweight attachment. See Plans for which side of the valve to locate the counterweight.

A limit switch shall be included and mounted to the valve body for remote indication of valve position.

The valve disc shall be constructed of cast iron or cast steel and shall be suspended from a non-corrosive shaft. The valve shall allow the equivalent flow area of the adjoining pipe. The shaft shall pass through a stiffing box and be connected to the swing arm in the outside of the valve.

Finishes

The interior and exterior of the valve body, bonnet and seal plate shall be coated with fusion-bonded epoxy meeting AWWA C-550 (latest revision). Interior coating shall be a minimum dry film thickness of 7 Mils, not including primer. Exterior coating shall be a minimum dry film thickness of 5 Mils, not including primer. Alternatively, exterior may be coated per Division 9.91.23.1.

15.33.09 Duckbill Elastomeric Check Valves

[CSI 40 05 71.13]

Part 1 – General

Submittals

Submit product literature including information on performance and operation valve, materials of construction, dimensions/weight, elastomer, flow data, headloss data, and pressure ratings.

Upon request, provide shop drawings that clearly identify the valve dimensions.

© 2023 RH2 Engineering, Inc.

Performance Requirements

When line pressure inside the valve exceeds the backpressure outside the valve by no more than 6-inches of head, the line pressure forces the bill of the valve open, allowing flow to pass. When backpressure exceeds the line pressure, the bill of the valve is forced closed. Valves shall seal upon flow reversal drip tight.

The valve shall be designed to open with a minimum head pressure of 6-inches of water column.

Design Requirements

All components shall be National Sanitation Foundation (NSF) Standard 61 compliant. Flange ends shall conform to ANSI B 16.10, Class 150#.

For flat-bottom style, the flat bottom is required to allow the valve to be installed where minimal bottom clearance exists.

Part 2 – Products

Manufactured Unit

Check Valves are to be all rubber and of the flow operated check type with a connection end as shown on the plans. The port area shall contour down to a duckbill, which shall allow passage of flow in one direction while preventing reverse flow. The valve shall be one-piece rubber construction. Valves must be self-supporting with no sag in both empty and filled conditions. The bill portion shall be thinner and more flexible than the valve body. The bill-slit-height of the duckbill valve must be larger than the nominal pipe diameter to allow for least restrictive full pipe flow area. Backup rings and any metal components shall be 316 stainless steel. Company name, plant location, valve size and serial number shall be bonded to the check valve.

Manufacturer

Valves shall be equal to those manufactured by ProCo, 710 Series ®, Cla-Val, Rubber-Flex ™ Duckbill Check Valve RF DBF or Red Valve, Tideflex ® Series 35.

Part 3 – Execution

Installation

Valve shall be installed as shown on the plans or as directed in the field by rotating pipe flange connections.

Wrap valve components in stainless steel mesh with 1/2-inch openings and 16-guage type 304 SS wire. Mesh shall be attached with stainless steel strap to pipe end of valve and bent to fit around valve bill to keep vermin from damaging the valve. Test valve open and closed to verify mesh flexes around valve.

© 2023 RH2 Engineering, Inc.

15.34 Pilot-Operated Control Valves

15.34.01 Common Work for Pilot-Operated Control Valves

[CSI 40 05 65.05, 40 05 67.05]

Part 1 – General

Submittals

Valve suppliers shall review the design and certify that the valve provided in the submittal will operate as described and within the conditions specified. Any discrepancies from the design and the specified valves shall be brought to the Owner's attention during the submittal process.

Performance Requirements

Valves shall be designed for the intended service. Install valves in strict accordance with manufacturer's instructions and as shown on the Plans.

Valves that do not operate as intended shall be replaced or modified so that they operate within the design parameters at the Contractor's expense.

All valves shall be rated for the pressures shown in Division 1.81.40, unless stated otherwise within the individual valve specification.

Part 2 – Products

Manufactured Units

Valves shall be diaphragm-actuated, hydraulically-operated valves and shall have a cover chamber sealed from the body by a flexible, synthetic rubber diaphragm. Control of the valve shall be from direct-acting, adjustable spring-loaded diaphragm valve(s) and/or solenoid valve(s) as appropriate for the valve function. Pilot controls shall be selected appropriately for the system operational pressure range. Valves to be globe or angle style with flanged or threaded ends as shown on the Plans.

Components

Provide brass or SS nameplates on all valves indicating valve size, inlet side (or flow direction), valve model and control pilot adjustment ranges.

Provide valves with all pilots, solenoids and controls preassembled to operate the valve in its intended function. Solenoids shall be powered by 120 VAC current. Provide each valve with stainless steel trim. Diaphragm shaft shall be stainless steel.

Provide a single point valve position limit switch assembly for the following valves.

- Surge Anticipator Valve, SPDT Switch
- Swing Check Valve, SPDT Switch

Limit switches equal to Cla-Val X105L (single) or X105L2 (dual) series. Mount on the valve position indicator.

A strainer shall be provided on all valve pilots to prevent clogging by debris in the water.

© 2023 RH2 Engineering, Inc.

Finishes

Provide all hydraulic control valves with an epoxy coating on the interior flow path and exterior body. Interior epoxy shall be certified for potable water use.

Field Quality Control

The valve manufacturer's representative shall inspect the installation prior to operating or field testing. A field test shall be conducted and/or supervised by the valve manufacturer's representative after the piping and controls have been installed. Upon completion of installation and testing, manufacturer's representative shall provide written certification that equipment is fully warranted installed.

15.34.32 Surge Anticipator Valve – Pilot-Operated Control

[CSI 40 05 67.43]

Part 2 – Products

Manufacturers

Valves shall be Cla-Val Model 52G-03KC Pressure Relief and Surge Anticipator valve.

Manufactured Units

Surge anticipator valves shall provide system protection against both high- and low-pressure events. The pressure relief pilot shall open when system pressures exceed the control setting. The low-pressure pilot shall open when pressures drop below the control setting and close when pressures are normal. The pilot supply system shall be remotely connected to the main header with a minimum ¾-inch pipe or tubing.

The initial pressure relief setpoint shall be equal to 190 psi, and the initial surge anticipation pressure setpoint shall be equal to 230 psi.

52G-03KC Cla-Val Pressure Relief & Surge Anticipator Valve shall have ductile iron body, epoxy lined and coated, grooved end connections, stainless steel trim, stainless steel tubing and fittings, with 100-300 psi spring range in the CRL-60 high pressure pilot and 30-300 psi spring in the CRA low pressure pilot.

15.35 Air Valves

[CSI 40 05 78]

© 2023 RH2 Engineering, Inc.

15.35.02 Air Valves – Clean Water

15.35.02.03 Air Release Valve for Vertical Turbine Pumps – Clean Water

[CSI 40 05 78.12]

Part 2 – Products

Manufacturers

Air valves for vertical turbine pumps shall be equal to APCO Model No. 140DAT.

Manufactured Units

Air valves for vertical turbine pumps shall be air/vacuum valve with double acting throttling (DAT) device and water diffuser. Provide air valve's body and cover fabricated from cast iron. Provide internal parts of materials including: stainless steel float, Buna-N seat, brass water diffuser, cast iron baffle, brass float stem and stem guide and bushing, and stainless-steel seat retaining screw.

Part 3 – Execution

Installation

If not detailed on the Plans, valves shall be attached to water main via tap, brass pipe, and an isolation ball valve and fittings as necessary. Outlet shall be provided with a brass male by female threaded return bend to direct air away from any mechanical or electrical components.

15.40 PIPING SPECIALTIES

15.40.01 Dismantling Joint

[CSI 40 05 06.13]

Part 1 – General

Design Criteria

Dismantling joint shall be accessible and capable of repeated installations and removals and capable of the testing and working pressures as specified in Division 1.81.40. Joint adjustment range of no less than 2-inches for 12-inch diameter and smaller pipe, and 3-inches for 14-inch diameter and larger pipe. Joint assembly to include limiting rods to prevent pull-out.

Part 2 – Products

Manufacturers

Dismantling joint shall be Romac DJ400 with limit rods or equal.

© 2023 RH2 Engineering, Inc.

Part 3 – Execution

Installation

Install per the manufacturer's instructions. Set the assembly at the midpoint of the adjustment range unless specifically called out otherwise on the Plans.

15.40.02 Expansion Joint

[CSI 40 05 06.15 or 33 05 09.15]

Part 1 – General

Design Criteria

All expansion joints shall be suitable for use with potable water systems if in contact with potable water. Expansion joints shall be rated by the manufacturer for the working pressure as specified in Division 1.81.40. Special covers shall be applied when specified in the Plans to resist weather, ozone, corrosive fumes and direct bury applications. Connections shall be as shown on the Plans (flange, weld, threaded, or mechanical joint).

Part 2 – Products

Manufacturers

Direct bury expansion joints shall be EBAA Iron ™ Flex-Tend® Double Ball standard unit expansion joints or approved equal.

Manufactured Units

Direct Bury

Expansion joints directly buried in the ground shall be suitable to external service conditions, including soil overburden and contact with saturated soils.

Expansion joints larger than 2-inches shall be ductile iron. Ends shall be flanged.

Non-Direct Bury (Vault, Above Ground or within Casing)

Non-direct bury expansion joints shall be natural rubber. The ends of the expansion joint larger than 2 inches in nominal diameter shall be flanged. Expansion joints 2 inches and smaller in nominal diameter shall be slip-on, threaded, or flanged.

Include retaining rings, anchoring, and extension limiting rods per the manufacturer's recommendations.

15.40.03 Pipe, Valve, and Conduit Supports

[CSI 40 05 07]

Part 1 – General

Summary

This section includes providing pipe supports, hangers, guides, and anchors.

© 2023 RH2 Engineering, Inc.

Related Sections

- Division 1.81.30 Seismic Restraint
- Division 5.05.23 Bolts and other Connectors

References

Pipe supports furnished under this section shall comply in all respects with the requirements of the following standards.

- ANSI/ASME B31.1 Power Piping
- ANSI/MSS SP-58 Pipe Hangers and Supports - Materials, Design and Manufacture
- ANSI/MSS SP-69 Pipe Hangers and Supports - Selection and Application

Performance Standards

Piping systems, including connections to equipment, shall be properly supported to prevent deflection and stresses. Supports shall comply with ANSI/ASME B31.1, except as otherwise indicated.

Size hanger rods, supports, clamps, anchors, brackets, and guides in accordance with ANSI/MSS SP 58 and SP 69.

Support plumbing drainage and vents in accordance with the Uniform Plumbing Code.

Submittals

Pipe Hanger/Support Design Calculations

Shop drawings of engineered pipe hangers/supports, including details of concrete inserts. Drawings shall include location plan showing location of the hanger/support in relation to the structure and/or equipment.

Part 2 – Products

Manufacturers

Pipe supports, hangers, guides, and anchors shall be Anvil, Unistrut, Tolco, Standon, or equal.

Pipe supports shall be equal to Standon Adjustable Model S92 Pipe Support. Pipe supports shall be equal to those manufactured by Material Resources, Hillsboro, Oregon.

Components

Provide and install all equipment necessary for compete support systems including, but not limited to, base, riser pipe, anchor bolts, hanger rod, support cradle or clamp, and fasteners.

All supports, rods, clips, etc. shall be 316 L stainless steel. Bolts shall be in accordance with 05.05.23.

Except as otherwise noted, pipe support components shall comply with the types in ANSI/MSS SP-58.

© 2023 RH2 Engineering, Inc.

Engineered Supports: Pipe hangers, supports for piping and conduits (raceways), and all spring support assemblies shall be completely engineered.

Freestanding Piping: Freestanding pipe connections to equipment, including chemical feeders and pumps, shall be firmly attached to fabricated steel frames made of angles, channels or I-beams anchored to the structure. Exterior, freestanding overhead piping shall be supported on fabricated pipe stands, consisting of pipe columns anchored to concrete footings, with horizontal, welded steel angles, and U-bolts or clamps installed to secure piping.

Submerged Supports: Submerged piping shall be supported with hangers, brackets, clips, or fabricated supports and stainless-steel anchors.

Point Loads: Any meters, valves, heavy equipment and other point loads on PVC, fiberglass and other plastic pipes shall be supported on both sides according to the manufacturer's recommendations to avoid pipe stresses. Supports on plastic and fiberglass piping shall be equipped with extra wide pipe saddles or stainless-steel shields. No support shall have metal pieces in contact with plastic process piping.

Noise Reduction: To reduce noise transmissions in the piping systems, copper tubes shall be wrapped with a 2-inch-wide strip of rubber fabric at each pipe support, bracket, clip, and hanger.

Finishes

Unless otherwise noted, all fabricated pipe supports, other than stainless steel or non-ferrous supports, shall be blast-cleaned after fabrication and hot-dip galvanized in accordance with ASTM 123. Other than stainless steel and non-ferrous supports, supports shall be coated in accordance with Division 9.91.13.1.

Part 3 – Execution

Installation

Piping shall be rigidly anchored to walls, slabs, and ceilings by means of suitable pipe supports, wall brackets, or pipe hangers.

Pipe supports, hangers, brackets, anchors, guides, and inserts shall be installed in accordance with the manufacturer's installation instructions and ANSI/ASME B31.1. All concrete inserts for pipe hangers and supports shall be coordinated with the formwork.

Stand-on Pipe Support: Adjust support, secure to pipe and secure to floor as recommended by the manufacturer.

Riser Supports: Risers shall be supported on each floor with riser clamps and lugs, independent of the connected horizontal piping.

Support Spacing: Pipe supports shall be placed to meet the following maximum spacing, unless otherwise noted or shown on the Plans: maximum vertical support spacing of 5 feet, and maximum horizontal support spacing of 10 feet. Support shall be provided at horizontal bends, base of risers (vertical bends), floor penetrations, connections to pumps, blowers, and other equipment, valves and appurtenances. Support spacing shall meet the local plumbing code where applicable. Support spacing may be increased from that noted above provided adequate calculations are provided supporting the change.

© 2023 RH2 Engineering, Inc.

Support Anchorage: Concrete anchors shall be as specified in Division 3, Concrete Anchors. All channel strut type supports shall have a minimum of 2 anchors per support.

Suspend pipe hangers from hanger rods, secure with double nuts.

Securely anchor plastic pipe, valves and headers to prevent movement during operation of valves. Anchor plastic pipe between expansion loops and direction changes to prevent axial movement through anchors.

Provide ductile iron elbows or tees supported from floors with base fittings. Support base fittings with metal supports, or when indicated on the Plans, concrete piers.

Do not use chains, plumbers' straps, wire, or similar devices for suspending, supporting or restraining pipes.

Install riser clamps at floor penetrations and where indicated on the Plans.

Field Quality Control

Pipe supports and hangers shall be positioned in such a way as to produce an orderly, neat piping system. All hanger rods shall be vertical, without offsets. Hangers shall be adjusted to line up groups of pipes at the proper grade for drainage and venting, as close to ceilings or roofs as possible, without interference with other work.

Properly support, suspend or anchor exposed pipe, fittings, valves and appurtenances to prevent sagging, overstressing or movement of piping and to prevent thrusts or loads on or against connected pumps, blowers or other equipment.

15.40.04 Dielectric Fittings and Adapters

[CSI 40 05 06.17]

Part 2 – Products

Dielectric Isolating (Insulating) Flange Joints

Flange insulation shall include a full-face insulating gasket, a full-length insulating sleeve for each bolt, and two insulating washers and two steel bearing washers for each flange bolt.

Sleeves and Washers

Insulating sleeves and washers shall be Pyrox G-10. Both the insulating washers and the steel washers shall fit over the outside diameter of the sleeve and shall fit within the bolt facing of the flange.

Gaskets

Gaskets shall be full faced Styrene Butadiene Rubber (SBR), Nitrile (Buna-N), Neoprene, polytetrafluoroethylene (PTFE), or compressed vegetable fiber. Gaskets shall have adequate dielectric properties, 200V/mil minimum, and shall be suitable for the operating and test pressures of the pipe system. Gaskets shall NSF-61 approved. No hard rigid gasket (e.g. phenolic or epoxy-fiberglass (G-10)), even if full-faced elastomeric coated (e.g. neoprene-coated phenolic) or with elastomeric sealing element such as an O-ring or flat band.

© 2023 RH2 Engineering, Inc.

For gaskets used at ductile iron pipe flange joints, provide American Toruseal Flange Gasket (yellow only) has sufficient dielectric characteristics to meet the 200V/mil minimum requirement.

Dielectric Isolation Joint Assembly

An insulating joint assembly shall consist of 2 flange by plain end or 2 flange by mechanical joint (FLG x PE or FLG x MJ) adapters, a full face insulating gasket, with full length insulating sleeves, 2 insulating washers, and 2 steel bearing washers for each flange bolt.

Flange Connection

Submittals for flange connections shall address suitability of gasket, bolts, washers, nuts, and flange characteristics for the specified pipe type and pressure, considering gasket compression, bolt strength, and required torque.

If a dielectric isolation is required for a hot tap between the outlet flange and the valve flange, provide valve flange without centering ring or provide verification that centering ring will not short through the gasket.

Part 3 – Execution

Installation

Provide dielectric adapters between dissimilar types of metal pipes, valves and fittings (e.g. copper to stainless steel). Flange isolating kits shall be used when dissimilar metal flanged pipe is connected. The following connections do NOT require dielectric isolators.

Metal	Connecting to
Bronze/brass	Copper or ductile iron
Ductile iron	Mild steel, bronze or brass

15.40.08 Valve Box – Cast Iron

[CSI 33 05 81.23]

Part 2 - Products

Components

Cast iron valve boxes shall be a complete unit per City Standard Detail composed of the following:

- Valve box
- Lid with recessed handle
- Extension stem for operator nuts more than 3 feet below grade

Valve box assembly shall be adjustable to accommodate variable trench depths. Valve box assembly shall be rated for continuous traffic loading.

© 2023 RH2 Engineering, Inc.

Part 3 – Execution

Installation

Valve boxes shall be provided and installed for all buried valves. Install box plumb with surface and straight so that keys and operators do not bind.

15.50 FLOW METERS

[CSI 33 19 00 or 40 71 00]

15.50.05 Common Work for Flow Meters

[CSI 33 19 05 or 40 71 05]

Part 1 – General

The existing 12-inch Endress + Hauser Proline Promag W300 flow meter shall be relocated by the Contractor as shown on the plans.

Part 3 – Execution

Installation

Install the meter in strict accordance with the manufacturer's recommendation.

Field Quality Control

Installation shall be inspected by manufacturer's representative prior to operating or field testing units. A field test shall be conducted and/or supervised by the meter manufacturer's representative after the piping and controls have been installed. Flow meters shall be inspected and verified by factory trained technicians.

Testing

If a meter approved by the Owner is not rated for the system test pressure, a temporary spool, flange(s), or cap(s) must be installed in place of the meter. A visual leak test will be performed under working pressure with the meter in place.

15.51 Flow Meter Readout Head

[CSI 33 09 01, 33 19 90 or 40 71 90]

15.51.05 Digital Read Head with Electronic Output

[CSI 33 09 01.33, 33 19 94 or 40 71 94]

Part 2 – Products

Components

Provide the necessary interface between remote instrumentation and the transmitter. Provide power and signal wiring as recommended by the manufacturer. Ground instrumentation shall be as recommended by the manufacturer.

© 2023 RH2 Engineering, Inc.

Part 3 – Execution

Installation

Connect outputs to telemetry or data logging system.

Install the remote readout head where shown on the Plans. If not shown on the Plans, confirm location with Engineer prior to installation.

15.53.03 Electromagnetic Flow Meters

[CSI 33 19 23 or 40 71 13.13]

Part 1 - General

Related Sections

- 15.51.05 Digital Read Head with Electronic Output

Provide relocation/installation of existing flow meter.

Relocate existing flow meter per mechanical and electrical plans.

15.60 PRESSURE MEASUREMENT

[CSI 40 73 00]

15.60.01 Common Work for Pressure Measurement

[CSI 40 73 05]

Part 1 – General

Related Sections

- Division 17 - Electronic Pressure and Level Devices

Design Requirements

Pressure and level measurement devices shall be scaled and rated for the application.

Part 3 – Execution

Installation

All devices shall be installed to be field serviceable without taking the facility out of service. Readouts shall be positioned to be easily read from a standing position and central to the room, unless otherwise allowed by the Engineer.

© 2023 RH2 Engineering, Inc.

15.61 Pressure Gauges

[CSI 40 73 13]

Part 1 – General

References

- ASME B40.100 (B40.1 Analog, B40.7 Digital)

Performance Requirements

Analog: Grade 2A (±1 percent of span) unless stated otherwise in the Products section.

Digital: Grade 2A (±0.5 percent of span) or AR (±1 percent of reading) unless stated otherwise in the Products section.

Submittals

Provide catalog sheets showing dimensions, pressure range, accuracy and optional accessories.

Part 2 – Products

Manufacturers

Marsh, 3D Instruments, or approved equal.

Materials

Provide gauges per the table below. Gauges completely suitable for measuring potable water with wetted parts of brass, bronze, or stainless steel.

Location	All Locations
Full Scale	0-350 psi
Normal Operating Range	0-220 psi
Analog or Digital	Analog
Surface or Stem Mount	Stem
Connection Size	0.25" or 0.5"
Accuracy Grade	See Perf. Req'ts
Glycerin fill or Dry	Glycerin
Face Size 2.5" or 4.5"	4.5"

Accessories

Provide a block and bleed valve for each pressure gauge. Transcat 600/700 series, stainless steel, or approved equal. Do not use in chlorine rooms or chlorination systems.

© 2023 RH2 Engineering, Inc.

Part 3 – Execution

Installation

Install gauges where shown on the Plans. Support gauges adequately. Tighten only with the connection hex nut, do not twist the case.

Field Quality Control

Where a new gauge is connected directly to the plumbing of a pressure transmitter, the gauge must read within its accuracy grade compared to the transmitter, unless the transmitter is proven faulty.

New gauges will be compared to each other in the field. Differences of more than 1.5% of the reading will be cause for rejection. Contractor to build a temporary testing manifold if the facility piping does not permit direct comparison of gauges in place.

Replace or calibrate gauges that do not meet the accuracy requirements.

15.70 PLUMBING

[CSI 22 00 00]

15.70.05 Common Work for Plumbing

[CSI 22 05 00]

Part 2 – Products

Components

Joints and Connections

- Steel and Brass: Use factory-cut pipe threads where possible; otherwise, cut pipe ends square, remove all fins and burrs, and cut full-depth tapered threads. Apply joint compound to male threads only and engage so that no more than three threads remain exposed.
- Copper: Make all joints in copper tubing with 95-5 tin-antimony solder applied in strict accordance with manufacturer's recommendations. Flared connections are only allowed in exposed locations.
- Hubless: Install a neoprene gasket and stainless steel clamp and shield coupling joint assemblies with bolts alternatively and incrementally tightened to a minimum 60 inch-pounds torque. Use a single set-point torque wrench manufactured specifically for this purpose. Do not use screwdrivers or other types of wrenches. Re-torque bolts after 24 hours.
- Solvent cement: Use solvent cement approved by pipe and fitting manufacturer and apply in accordance with the manufacturer's installation procedures.

© 2023 RH2 Engineering, Inc.

Fixtures and Trim

Use chromium-plated brass bolts, nuts and washers where exposed; otherwise, use brass or bronze bolts, nuts and washers. Make connections gas-tight and water-tight. Do not use bulk material, including putty and plastics, for gaskets.

Trim shall match metal parts used with fixtures. Trim shall be stainless steel, except when provided with plumbing fitting by the manufacturer. Exposed trim shall have a satin type finish. Escutcheons shall be provided at each point where pipe or other fittings enter the wall.

Part 3 – Execution

Examination

Prior to work of this section, carefully inspect installed work of other trades and verify that such work is complete to the point where this installation may properly commence. Verify that plumbing may be installed in strict accordance with all pertinent codes and regulations. In the event of a discrepancy, do not proceed with the installation and immediately notify the Owner.

Installation

Install and locate pipe, fittings and accessories as shown on the Plans.

Waste piping vents shall protrude through the roof. In framed walls, waste piping vents shall be concealed. Provide individual vents for each fixture.

Except for drain grates, do not embed plumbing in concrete or masonry, always surface mount. Where furring exists, conceal in furring unless shown otherwise on the plans. Where plumbing passes through concrete or masonry, provide a sleeve unless specifically shown otherwise on the plans.

Rigidly support wall hung fixtures by means of metal supporting members so that no stress is transmitted to connections.

Do not cut into or reduce the size of any load-carrying member without prior approval of the Engineer. Install pipes to clear all beams and obstructions.

Locate water hammer arresters in accordance with the manufacturer's recommendation.

Provide uniform pitch of at least $^{1}/_{8}$-inch per foot, or as otherwise noted, for all horizontal waste and drain piping within the building. Pitch all vents for proper drainage.

Cushion all traps and bearings to minimize transfer of sound; firmly anchor all pipes in position.

Vertical stacks shall be supported at floors with clamp anchors as required to relieve joint stresses.

Conceal all piping unless otherwise shown on the Plans.

Provide and conceal air chambers the same size as the branch line at each water connection to a plumbing fixture.

© 2023 RH2 Engineering, Inc.

Inspection

Test all plumbing fixtures for proper and smooth operation when in use.

Make sure fixtures are thoroughly clean and free of any foreign material.

15.73 Sewer Fixtures

15.73.02 Building Floor Drains

[CSI 22 13 19.13]

Part 2 – Products

Manufacturers

Floor drains shall be equal to Wade 1100-series floor drains with adjustable strainers.

Manufactured Units

Building floor drains shall be round- drains with sediment bucket. Provide drain fabricated from cast iron with satin bronze strainers.

Part 3 – Execution

All exposed pipe outfalls from floor drains shall be protected from rodent intrusion by covering end of pipe with woven, 24-gauge, ¼-inch by ¼-inch wire mesh. Secure to end of pipe with pipe clamp, exterior-grade concrete mortar or other Engineer-approved patching compound.

15.75 Plumbing Fixtures

[CSI 22 40 00]

15.75.02 Backflow Prevention Assemblies (2-inch and Smaller)

[CSI 40 05 67.16]

Part 1 – General

Summary

The Contractor shall be responsible for maintaining cross flow prevention between approved and non-approved potable water systems. The Contractor shall supply and maintain products for use to prevent cross flow. Where required on the plans or by the local authority, a reduced pressure principal backflow device shall be provided.

Submittals

The Contractor shall obtain and pay for device testing by a certified backflow assembly and provide test report to the Owner.

Provide information showing the device is approved by the FCCC and listed with the State of Washington. Device used must be approved by the Washington State Department of Health.

© 2023 RH2 Engineering, Inc.

Part 2 – Products

Manufacturers

Standard double check valve assembly shall be equal to Wilkins Model 350.

Reduced pressure principal double check valve assembly shall be equal to Wilkins Model 375.

Manufactured Unit

Double check valve assembly shall be a complete unit consisting of one body containing two independently-operating, spring-loaded check valves and two isolation valves. Testing shall be accomplished through the use of stop cocks installed in the unit. Spring loading of each check valve shall be sufficient to hold at least 1 psi in the normal direction of flow when outlet is at atmospheric pressure.

Internal parts of spring-loaded check valves shall be removable or replaceable without removing double check valve from the line. Provide double check valve fabricated from corrosion-resistant materials.

Reduced pressure (RP) backflow prevention assembly shall be a complete unit consisting of isolation valves on each end. Assembly shall be constructed of corrosion-resistant materials.

Part 3 – Execution

Installation

Install devices per the requirements of the PNWS-AWWA Cross Connection Control Manual. RP devices shall have daylight drainage.

Provide Department of Health certification and field testing of assembly at project completion in accordance with the Uniform Plumbing Code. Provide test report to Owner.

15.75.10 Spring Type Check Valves

[CSI 40 05 65.41]

Part 2 – Products

Manufacturers

Spring type check vales shall be equal to Ryan Herco PVC spring check valves.

Manufactured Unit

Provide spring type check valves fabricated for PVC Type 1, Grade 1, with buna-n seals and stainless steel spring and shaft. PVC spring check valves shall be listed by the NSF for use in potable water systems. Spring shall provide 1/2-lb. spring tension to ensure a positive seal against backflow. Check valves shall be pressure rated for 200 psi at 70° F.

© 2023 RH2 Engineering, Inc.

15.75.11 True Union Ball Check Valves

[CSI 40 05 63.45 or 40 05 65.42]

Part 2 – Products

Manufacturers

True union ball check valves shall be equal to Chemtrol BC Series.

Manufactured Unit

Provide true union ball check valves fabricated from PVC Type 1, Grade 1 with viton "O" ring seals. PVC ball check valves shall be listed by NSF for use in potable water systems. Check valves shall be pressure rated for 150 psi at 75° F.

15.75.12 PVC True Union Ball Valves

[CSI 40 05 63.44]

Part 2 – Products

Manufacturers

Valves shall be equal to Chemtrol Tu Series Tru-bloc, Hayward TBH Series or Engineer approved equal.

Manufactured Unit

Provide true union ball valves fabricated from PVC Type 1, Grade 1 with PTFe seats and FKM or FPM "O" ring seals. PVC valves shall be listed by the NSF for use in potable water systems. Valves shall be pressure-rated per the pressure rating section in this division. Valves designated for panel mounting shall have handle extensions designed for panel mounting.

15.75.13 Electronic Solenoid Valves

[CSI 40 05 82]

Part 2 – Products

Manufacturers

Electronic solenoid valves shall be equal to ASCO, Red-Hat, Model 8210 general service, 2-way solenoid valves.

Manufactured Unit

Provide electronic solenoid valves fabricated from forged brass body with buna-n seals and discs. Provide shading coil fabricated from copper. Valves shall have normally closed type operation and shall open when solenoid is energized. Solenoid valve shall be pressure rated for 100 psi at 180° F and UL listed for a safety shutoff valve. Solenoid valve shall operate from a 120 VAC, 60 Hz power source.

© 2023 RH2 Engineering, Inc.

15.75.14 Needle Valves

[CSI 40 05 89.23]

Part 2 – Products

Manufacturers

Needle vales shall be equal to Ryan Herco Model 5251-005.

Manufactured Unit

Provide needle valves fabricated from PVC Type 1, Grade 1, and listed by the NSF for use in potable water systems. Needle valves shall have an angle pattern design and pressure rated for 200 psi at 75° F.

15.75.16 Brass Ball Valves

[CSI 40 05 63.34]

Part 1 – General

Performance Requirements

Ball valves rated for 250 psi W.O.G. minimum. Valve to be "full-port" style.

Part 2 – Products

Manufactured Unit

Ends to be threaded, unless specifically shown otherwise on the plans. Include ¼ turn lever handle. If available space does not allow handle to operate without interference, replace with tee handle.

15.75.20 Y-Strainers

[CSI 40 05 89.14]

Part 2 – Products

Manufacturers

Y-strainers shall be equal to Chemtrol YS Series Y-strainers.

Manufactured Unit

Provide Y-strainers fabricated from PVC Type 1, Grade 1 with viton seals. Provide filter screen fabricated from corrosion-resistant materials with an open area equivalent to twice the nominal pipe size. Y-strainers shall be rated for pressures as specified in the pressure rating section of this division.

© 2023 RH2 Engineering, Inc.

15.75.21 Unions

[CSI 40 05 06]

Part 2 – Products

Manufactured Units

As shown on the Plans, unions shall be water tight, capable of pressure forces of the pipe it is connected to, and allow a minimum of ¼-inch of play for installation and maintenance flexibility. Unions shall be threaded to match the pipe it connects and match the pipe material (copper, brass or PVC).

15.75.22 Quick Disconnect Fittings

[CSI 40 05 06 or 40 05 89.33]

Part 2 – Products

Manufacturers

Couplers shall be equal to Harrington Model 153 quick disconnect fittings cam operated couplings. Hose clamps shall be equal to Ryan Herco snapper hose clamps.

Manufactured Units

Quick disconnect fittings shall be a cam-type coupling fabricated from glass-filled polypropylene. Couplers shall mate with other couplers, both metal and plastic, and shall be manufactured to Mil-C-27487 dimensions. Install couplers on both ends of braided vinyl hose.

Connect quick disconnect fittings to braided vinyl hose using a non-corrosive hose clamp fabricated from an acetyl copolymer. Hose clamps shall be pressure rated for the pressures identified in Division 1.81.40.

15.75.38 Hose Bibs

[CSI 22 42 39 or 40 05 81.33]

Part 2 – Products

Manufacturers

Interior hose bib shall be equal to Woodford Model 24 anti-contamination wall faucet.

Exterior hose bibs shall be equal to Woodford Model 65.

Woodford Model B65 or equal shall be used on exteriors of buildings where the public has access to the building exterior.

Manufactured Units

Provide hose bibs to building interiors with brass construction and a 3/4-inch connection and vacuum breaker.

© 2023 RH2 Engineering, Inc.

Provide hose bibs on exteriors to buildings as shown on the Plans. Provide automatic draining, freezeless wall hydrant with anti-siphon vacuum breaker to buildings that are fenced in to restrict public access. Public accessible areas shall have a flush mounting wall box.

15.75.39 Faucet

[CSI 22 42 39]

Part 2 – Products

Manufacturers

Faucets shall be equal to Kohler Bardney water-guard gooseneck spout faucet with aerator.

Manufactured Units

Gooseneck faucet for service sink: Handle shall specify cold water.

15.75.40 Polyethylene Tubing and Fittings

[CSI 22 11 13 or 40 05 31.83]

Part 1 – General

Design Requirements

Tubing rated for potable water or food-grade applications. Pressure rating of 100 psi.

Part 2 – Products

Manufacturers

Polyethylene tubing and fittings shall be equal to Kuriyama KuriTech 220 polyethylene flexible tubing.

Manufactured Units

Provide flexible polyethylene thermoplastic tubing fabricated from high molecular weight resins. Resistance to environmental stress cracking shall meet or exceed the requirements set forth in ASTM D 1693. Polyethylene tubing shall conform to standards set forth in ASTM D124878 for Type 1, Class A, Category 4, Grade E5 polyethylene tubing.

15.75.41 Water Hose, Nozzle, and Rack

[CSI 22 11 19.15]

Part 2 – Products

Materials

Provide a 50-foot-length of ¾-inch water hose with a ¾-inch coupling for each location as shown on the Plans.

Provide one adjustable pattern brass nozzle with 3/4-inch threads for each water hose provided.

© 2023 RH2 Engineering, Inc.

Provide one rigid molded plastic hose rack for each water hose provided. Mount securely to wall in locations shown on the Plans.

15.75.51 Water Hammer Arresters

[CSI 22 11 19.17]

Part 2 – Products

Manufacturers

Water hammer arrests shall be equal to Wade Shokstops.

Manufactured Units

Provide water hammer arresters fabricated from stainless steel, bellows type construction and pre-charged with nitrogen. Size and locate in accordance with Plumbing and Drainage Institute Standard PDI-WH201.

15.80 WATER TREATMENT PROCESS PIPING

Part 1 – General

The work and materials described in this section include the pipe, valves and fittings installation for conveying 10 to 50 percent caustic soda in high-pressure injection lines. It is required that the proper materials be used, and that skilled and experienced pipe fitters construct the chemical and injection piping. Pipe, fittings, primers and cements used shall be suitable for carrying the listed chemicals. All final joints on the piping system must be strong, watertight, free from stresses and ready for a 20-year life of daily use including any reused connections and fittings.

The Contractor shall submit list the names of the pipe fitters who will perform the installation, and the names of chemical treatment project, including chemical names, on which they have installed piping. Installers shall be experts at the installation of chemical process pipe and shall have performed at least 10 chemical treatments projects using the materials specified herein. Submittals shall also indicate the compatibilities of the wetted materials with the chemicals used and the applicable pressure ratings.

Related Sections

- Division 1.82 Pressure Rating
- Division 11.64 Water Treatment Chemical Systems Equipment
- Division 15.40.3 Pipe, Valve and Conduit Supports
- Division 15.60 Pressure and Level Measurement

Submittals and Design

Provide a detailed layout drawing annotating the proposed use of existing pipe, valves fittings and accessories and product information on all new pipe, fittings, valves, and accessories to be used. All pipe, fittings, valves and accessories shall be rated for the applicable working and testing pressures as indicated herein. All wetted materials provided, including gaskets, seals,

© 2023 RH2 Engineering, Inc.

diaphragms, etc. shall be compatible with the chemicals used in the application. All wetted materials used shall include a chemical compatibility chart to be submitted for approval. Provide submittal information on solvent cement showing compatibility with specified chemicals and pressures.

The contractor shall submit the manufacturer's written installation methods to the Engineer for approval prior to installing PVC or CPVC pipe. The installation instructions shall include application methods and equipment; primer contact times and application quantities; cement curing time and application quantities; and all other special construction requirements.

Spare Parts

Supply each of the following for each diameter and material supplied unless otherwise noted:

- True Union Ball Valve(s)
- True Union Ball Check Valve(s)
- Air Release Valve
- Pressure Relief Valve
- (Combination) Back Pressure Sustaining and Anti-Siphon Valve
- Y-strainer
- Pulsation Dampener Bladder

Part 2 – Products

General

All pipe, fittings, valves and accessories shall be rated for the applicable working and testing pressures as specified herein. Unless otherwise noted on the Plans or specified herein, all valves, fittings and pipe for the chemical feed systems shall be as follows:

Chemical	Plastics	Metals	Elastomers
Caustic Soda:	PVC	316 Stainless Steel	EPDM
	PP	Copper	Neoprene

The Contractor shall verify the suitability of the existing equipment and materials proposed to be reused prior to bidding and submittals. Any discrepancies shall immediately be brought to the attention of the Engineer. Where discrepancies are noted, the Contractor shall assume that new materials will be required and existing materials cannot be reused.

Pipes and Fittings

Polyvinyl Chloride (PVC) and Chlorinated Polyvinyl Chloride (CPVC) Pipe and Fittings

Chlorinated polyvinyl chloride (CPVC) and polyvinyl chloride (PVC) pipe for pipe fittings and couplings shall conform to ASTM F-441, F-437, and F-439. Pipe for chemicals shall be Schedule 80. All other PVC or CPVC pipe shall be the schedule thickness shown on the plans.

The objective of the primer and cement shall be to form a fused CPVC or PVC weld between the CPVC or PVC pipe and fittings. The contractor shall submit, for the Engineer's approval,

© 2023 RH2 Engineering, Inc.

the names of the proposed primer and cement and the CPVC or PVC pipe manufacturer's written recommendations stating the selected primer's and cement's suitability for use with the listed chemicals; this shall be equal to Weld-on 724 for sodium hypochlorite and sodium hydroxide (caustic soda) applications. All primer and cement shall be new.

Polyethylene (PE) Tubing and Fittings

Provide flexible polyethylene thermoplastic tubing fabricated from high molecular weight resins. Resistance to environmental stress cracking: meet or exceed requirement set forth in ASTM D 1693. Polyethylene tubing shall conform to standard set forth in ASTM D124878 for Type 1, Class A, Category 4, Grade E5 polyethylene tubing and shall be equal to Harrington polyethylene flexible tubing.

Valves

True Union Ball Valves

Provide true union ball valves fabricated from materials suitable for the intended chemical application and as specified above. All PVC or CPVC Ball Valves must be of the True Union type and for Bleach service with an energized seat that will concurrently provide automatic adjustment for wear and leak-free service at the lower pressure port, and with a ball containing an adequate vent to the higher-pressure port. The manufacturer of all PVC and CPVC Bleach Ball Valves must complete all components prior to the factory assembly, test and packaging of those valves. Modification of assembled valves by any manufacturer or vendor is unacceptable. Also, the valves must be individually packaged with each carton label depicting Bleach Ball Valve, size, material and manufacturer. The ball valve bodies must be permanently marked externally with NSF (symbol of NSF International), indicating approval for use with potable water, "bleach" and two opposing directional arrows, one inscribed with "flow", and the other with "vent." Valves designed for panel mounting shall have handle extension designed for panel mounting. Valves shall be equal to Hayward, Chemtrol, George Fischer (+GF+), ASAHI/America, or engineer approved equal.

True Union Ball Check Valves

Provide true union ball check valves fabricated from materials suitable for the intended chemical application and as specified above. Ball check valves shall be listed by NSF for use in potable water systems. Valves shall be equal to Hayward, Chemtrol, George Fischer (+GF+), ASAHI/America, or Engineer-approved equal.

Butterfly Valve

All valve materials used shall be recommended by the manufacturer for the intended process and/or chemical service application. Valves shall be lug style with ANSI standard bolt pattern. Valves shall be equal to Hayward, Chemtrol, George Fischer (+GF+), ASAHI/America, or Engineer approved equal.

Air Release Valves

Provide air release valves at chemical piping system high points and as shown on the Plans. Unless otherwise shown on the Plans, air release valves should be routed to the building exterior and shall not be combined with any other chemical system and DWV vent line. The air release relief valve shall be a Plastomatic, in the size shown on the plans, or approved equal.

© 2023 RH2 Engineering, Inc.

Valves shall be fabricated from materials suitable for the intended chemical application and as specified above.

Pressure Relief Valves

Relief valves shall prevent over-pressurization of the lines to which they are attached. Valves shall be fabricated from materials suitable for the intended chemical application and as specified above. The valve shall be Griffco, in the size shown on the plans, or approved equal, and designed for in-line operation, unless otherwise shown on the Plans.

(Combination) Back Pressure Sustaining and Anti-Siphon Valve

Provide combination backpressure sustaining and anti-siphon valves designed to prevent siphoning in system where discharge pressure may drop below suction line pressure. The valve shall also function as a backpressure sustaining valve to maintain a constant backpressure on the metering pump. Valves shall be fabricated from materials suitable for the intended chemical application and as specified above. The valve shall be a Griffco, in the size shown on the plans, or approved equal, and designed for in-line operation, unless otherwise shown on the Plans.

Part 3 – Execution

A. All piping shall be cut square, deburred, and cleaned of all dirt, grease, and oils before joining.

B. Once installed, all piping shall be flushed to clear the lines of debris. Pressure test to the system using water. Upon passing water pressure test, fill all pipes with chemical solution to be used during normal operations. Pressurize all piping to normal operating pressure for a period of five days. Correct all leaks and drips at the conclusion of this testing. At the determination of the Engineer, pressure test may have to be repeated if a large number of leaks or drips are repaired. All valves and appurtenances shall be set based on manufacturers' recommendation and the operation pressures identified.

© 2023 RH2 Engineering, Inc.

16.00 GENERAL

The Contractor shall provide all labor, material, tools, equipment and services required to complete the furnishing, installation, wiring, connection, calibration, adjustment, testing and operation of all electrical equipment, devices and components as indicated and implied by the plans and specifications.

Sections in these specifications titled "*Common Work for . . .*" shall apply to all following sections whether directly referenced or not.

The Contractor shall reference Division 1.25 regarding substitutes and "or-equals".

16.05 Common Work for Electrical

[CSI 26 05 00]

Part 1 – General

Summary

Plans are diagrammatic and indicate general arrangements of systems and equipment, except when specifically, dimensioned or detailed. The intention of the plans is to show size, capacity, approximated location, direction and general relationship of one work phase to another, but not exact detail or arrangement.

Regulatory Requirements

The Contractor shall coordinate and provide all permits, licenses, approvals, inspections by the authority having jurisdiction and other arrangements for work on this project and all fees shall be paid for by the Contractor. The Contractor shall include these fees in the bid price.

Related Sections

See the following sections for items that may be provided and/or installed with other electrical equipment.

- Division 8.90 Motorized louvers/dampers
- Division 10.14 Signs for electrical equipment
- Division 11.20 Pump motors
- Division 11.95.34 Fans
- Division 15.30 Valves with position indication and controls
- Division 15.51 Flow meter transmitters
- Division 17 Automatic Controls

Codes and Standards

Provide all electrical work in accordance with latest edition of National Electrical Code, National Electrical Safety Code, Washington State Electrical Code, and local ordinances. If

© 2023 RH2 Engineering, Inc.

any conflict occurs between government adopted code rules and these specifications, the codes are to govern. All electrical products shall bear a label from a certified testing laboratory recognized by the State of Washington. Recognized labels in the State of Washington are UL, ETL, and CSA-US.

Definitions

Dry Locations: All those indoor areas which do not fall within the definitions below for wet, damp, or corrosive locations and which are not otherwise designated on the Plans.

Wet Locations: All locations exposed to the weather, whether under a roof or not, unless otherwise designated on the Plans.

Damp Locations: All spaces wholly or partially underground, or having a wall or ceiling forming part of a channel or tank unless otherwise designated on the Plans.

Corrosive Locations: Areas where chlorine gas under pressure, sulfuric acid, or liquid polymer are stored or processed. These areas are identified on the Plans.

The words "plans" and "drawings" are used interchangeably in this specification and in all cases shall be interpreted to mean "Plans".

The word "provide" shall be interpreted to mean furnish and install.

Design Requirements

Unless otherwise noted, provide enclosures as follows:

1. Class 1, Division 1 and 2 Locations: NEMA Type 7
2. Indoors Unclassified Locations: NEMA Type 12
3. Corrosive Locations: NEMA Type 4X
4. Outdoors and/or Wet Locations: NEMA Type 4X
5. Electrical Rooms: NEMA Type 1

Submittals

Provide submittals of each item specified in this division to engineer for approval in accordance with Division 1 of these specifications. Submittals for motor control centers, motor control panels, control panels, instrumentation panels, and pump control panels shall include at a minimum: a wiring diagram or connection schematic, and an interconnection diagram.

<u>Wiring Diagram or Connection Schematic</u>

1. Include all devices in a system and show their physical relationship to each other including terminals and interconnecting wiring in assembly. This diagram shall be in a form showing interconnecting wiring only by terminal designations (wireless diagram).

<u>Interconnection Diagram</u>

1. Show all external connections between terminals of equipment and outside points, such as motors and auxiliary devices. Show references to all connection diagrams which interface to the interconnection diagrams. Interconnection diagrams shall be of the

© 2023 RH2 Engineering, Inc.

continuous line type. Show bundled wires on a single line with the direction of entry/exit of the individual wires clearly shown. Identify all devices and equipment. Show terminal blocks as actually installed and identified in the equipment complete with individual terminal identification. All jumpers, shielding and grounding termination details not shown on the equipment connection diagrams shall be shown on the interconnection diagrams. Show spare wires and cables.

Provide submittal information for the following items:

1. Utility Meter Enclosure
2. Current Transformer Enclosure
3. Surge Protective Device (SPD)
4. Variable Frequency Drives
5. Distribution Transformers
6. Branch Circuit Panelboard
7. Circuit Breakers
8. Conduit and Fittings
9. Outlet and Junction Boxes
10. Electrical Handholes and Vaults
11. Underground Marking Tape
12. Electrical Grounding Components
13. Wire and Cables
14. Switches and Receptacles
15. Light Fixtures
16. Other Electrical Components listed in this Division and/or required by the Engineer.

Project Conditions

Contractor shall keep all power shutdown periods to a minimum. Carry out shutdowns only after a shutdown schedule has been submitted and approved by both the Owner and the Engineer.

Construction Power

See Division 1.51

Part 2 – Products

Source Quality Control

Provide adequate space and fit for the electrical installation, including, but not limited to, determination of access-ways and doorways, shipping sections, wall and floor space, and space occupied by mechanical equipment. Provide electrical equipment that fits in the areas shown on the Plans. All equipment shall be readily accessible for maintenance, shall have electrical

© 2023 RH2 Engineering, Inc.

clearances in accordance with National Electric Code (NEC) and shall be installed in locations which will provide adequate cooling.

Do not use equipment exceeding dimensions indicated or equipment or arrangements that reduce required clearances or exceed specified maximum dimensions unless approved by the Owner.

Identification of Listed Products

Electrical equipment and materials shall be listed for the purpose for which they are to be used, by an independent testing laboratory. When a product is not available with a testing laboratory listing for the purpose for which it is to serve, the inspection authority may require the product to undergo a special inspection at the manufacturer's place of assembly. All costs and expenses incurred for such inspections shall be included in the original contract price.

Materials

Use equipment, materials and wiring methods suitable for the types of locations in which they will be located, as defined in Definitions above.

All materials and equipment specified herein shall, within the scope of UL Examination Services, be approved by the Underwriter's Laboratories for the purpose for which they are used and shall bear the UL label.

Components

Fasteners for securing to walls, floors, and the like shall meet the requirements of Division 5.05.23.

Accessories

Wire Identification

1. Identify each wire or cable at each termination and in each pull-box using numbered and lettered wire markers. All electrically common conductors shall have the same number. Each electrically different conductor shall be uniquely numbered. Identify panelboard circuits using the panelboard identification and circuit number. Identify motor control circuits using the equipment identification number assigned to the control unit by the motor control center manufacturer and the motor control unit terminal number. Identify other circuits as approved by the Engineer. Identify each wire or cable in each pull-box with plastic sleeves having permanent markings. Conductors between terminals of different numbers shall have both terminal numbers shown at each conductor end. The terminal number closest to the end of the wire shall be the same as the terminal number.

Finishes

Refer to each electrical equipment section of these specifications for painting requirements of equipment enclosures.

© 2023 RH2 Engineering, Inc.

Part 3 – Execution

Installation

General

1. Complete the wiring, connection, adjustment, calibration, testing and operation of mechanical equipment having electrical motors and/or built-in or furnished electrical components in accordance with electrical code, UL listing requirements and manufacturer's instructions. Install electrical components that are furnished with mechanical equipment.
2. Provide the size, type and rating of motor control devices, equipment and wiring necessary to match the ratings of motors furnished with mechanical equipment.
3. Complete the procurement, installation, wiring, connection, calibration, adjustment, testing and operation of all electrical devices, components accessories and equipment which is not shown or specified but which is nonetheless required to make the systems shown and specified properly functional.

Workmanship

1. Assign a qualified representative who shall supervise the electrical construction work from beginning to completion and final acceptance.
2. Provide all labor using qualified craftsmen, who have had experience on similar projects.
3. Ensure that all equipment and materials fit properly in their installations.

Field Services

1. Provide field services of qualified technicians to supervise and check out the installation of the equipment, to supervise and check out interconnecting wiring, to conduct start-up and operation of the equipment, and to correct any problems which occur during testing and start-up.

Installing Equipment

1. Provide the required inserts, bolts and anchors, and securely attach all equipment and materials to their supports.
2. Install all floor-mounted equipment on 3½-inch high reinforced concrete pads.
3. Install all equipment and junction boxes to permit easy access for normal maintenance.

Cutting, Drilling, and Welding

1. Provide any cutting, drilling, and welding that is required for the electrical construction work.
2. Structural members shall not be cut or drilled, except when approved by the Engineer. Use a core drill wherever it is necessary to drill through concrete or masonry. Perform patch work with the same materials as the surrounding area and finish to match.

© 2023 RH2 Engineering, Inc.

Metal Panels

1. Mount all metal panels, which are mounted on, or abutting concrete walls in damp locations or any outside walls ¼-inch from the wall and paint the back side of the panels with a high build epoxy primer with the exception of stainless-steel panels. Film thickness shall be 10 Mils minimum.

Seismic Requirements

1. See Division 1.81.30

Load Balance

1. Balance electrical load between phases as nearly as possible on panelboards, motor control centers, and other equipment where balancing is required.
2. When loads must be reconnected to different circuits to balance phase loads, maintain accurate record of changes made, and provide circuit directory that lists final circuit arrangement.

Field Quality Control

Minor Deviations

1. The electrical plans are diagrammatic in nature and the location of devices, fixtures, and equipment is approximate unless dimensioned. Based on this, the right is reserved by the owner to provide for minor adjustments and deviations from the locations shown on the Plans without any extra cost. Deviations from the Plans and/or specifications required by code shall also be done, subsequent to Owner's approval, without extra cost.
2. Plans indicate the general location and number of the electrical equipment items. When raceway, boxes, and ground connections are shown, they are shown diagrammatically only and indicate the general character and approximate location. Layout does not necessarily show the total number of raceways or boxes for the circuits required. Furnish, install, and place in satisfactory condition all raceways, boxes, conductors, and connections, and all of the materials required for the electrical systems shown or noted in the contract documents complete, fully operational, and fully tested upon the completion of the project.

Project Record Plans

1. A set of Plans shall be maintained at the job site showing any deviations in the electrical systems from the original design. A set of electrical Plans, marked in red to indicate the routing of concealed conduit runs and any deviations from the original design, shall be submitted to the Owner for review prior to final acceptance.
2. After testing and acceptance of the project the Contractor shall furnish in the O&M manuals an accurate connection schematic and interconnection diagram for every service entrance panel, pump control panel, motor control center, and instrumentation panel provided this project.

© 2023 RH2 Engineering, Inc.

Cleanup and Equipment Protection

Equipment Protection

1. Always exercise care after installation of equipment, motor control centers, control panels, etc., to keep out foreign matter, dust debris, and moisture. Use protective sheet metal covers, canvas, heat lamps, etc., as needed to ensure equipment protection.

Cleaning Equipment

1. Thoroughly clean all soiled surfaces of installed equipment and materials upon completion of the project. Clean out and vacuum all construction debris from the bottom of all equipment enclosures.

Painting

1. Repaint any electrical equipment or materials scratched or marred in shipment or installation, using paint furnished by the equipment manufacturer.

Final Cleanup

1. Upon completion of the electrical work, remove all surplus materials, rubbish, and debris that accumulated during the construction work. Leave the entire area neat, clean and acceptable to the Owner.
2. Lamps and fluorescent tubes shall be cleaned, and defective units replaced at the time of final acceptance.

16.10 ELECTRICAL SITE WORK

16.10.1 Common Work for Electrical Site Work

[CSI 33 71 19]

Part 1 – General

Summary

The work included in this section consists of furnishing and installing conduit, fittings, handholes, pull vaults, warning tape, cables, wires, and related items, complete as specified herein and as indicated on the Plans for a complete and functional underground electrical system. Special vaults, grounding, trench backfill requirements may be specified with the particular equipment or electrical system involved.

Related Sections

Wire and cable per Section 16.60.

Raceways and conduit per Section 16.70.

Design Requirements

Materials and equipment shall conform to the respective specifications and standards; and to be the specifications herein. Electrical rating shall be as indicated on Plans.

© 2023 RH2 Engineering, Inc.

Part 3 – Execution

Construction

Provide all excavation, trenching, backfill, and surface restoration required for the electrical work.

Excavate to depths as required by Code, particular installation, or as shown on the Plans. Trench width and length as required by the installation or as shown. Trench bottom shall be free of debris and graded smooth. Where trench bottom is rock or rocky or contains debris larger than 1 inch or material with sharp edges, over excavate 3 inches and fill with 3 inches of sand. Separation between new electrical utilities and other utilities shall be 12 inches horizontal and 6 inches vertical minimum, except gas line separation shall be 12 inches both vertical and horizontal. Cross concrete or asphalt only after surface material has been saw cut to required width and removed.

Backfill around raceways shall be 3-inches of pea gravel or sand for systems of 600 volt or less. Provide red marker tape over raceways below grade. Place backfill material to obtain a minimum degree of compaction of 95 percent of maximum density at optimum moisture content. Moisten backfill material as required to obtain proper compaction. Do not use broken pavement, concrete, sod, roots or debris for backfill.

16.10.2 Underground Marking Tape (Detectable Type)

[CSI 33 05 97.23]

Part 2 – Products

Manufacturers

Tape shall be Brady "Detectable Identoline – Buried Underground Tape", or equal.

Materials

Underground marking tape shall be for location and early warning protection of buried power and communication lines. Tape shall be detectable by a pipe/cable locator or metal detector from above the undisturbed ground. Tape shall be nominally 2 inches wide with a type B721 aluminum foil core laminated between two layers of 5 Mil thickness polyester plastic. The plastic color shall be red for electrical lines and orange for telephone lines.

Part 3 – Execution

Installation

Unless noted otherwise on Plans, install approved underground marking tape 12 inches above and directly over the conduit or raceway in all trenches.

© 2023 RH2 Engineering, Inc.

16.10.3 Handholes and Pull Boxes

[CSI 33 71 19.13]

Part 2 – Products

Manufacturers

Handholes and Pull boxes shall be Oldcastle or approved equal unless specified otherwise on the Plans.

Materials

Provide handholes of reinforced precast concrete, or injection molded composite plastic material. Handholes shall include a base, a body, extensions and a cover. Provide handholes with a perimeter of 10 feet or more (e.g., 3 feet by 2 feet) with both pulling irons and cable racks. All hardware shall be stainless steel, or hot-dip galvanized after fabrication; cable racking and hardware, however, shall be non-metallic and corrosion resistant. If no handhole size is shown on the Plans, size units per NEC or provide 12 inches by 24 inches by 18 inches deep, whichever is larger.

All handholes located in areas subject to vehicular traffic or where identified on Plans shall be ASSHTO, H-20 rated in accordance with ASTM C857.

The lids to all pull boxes and vaults shall be permanently marked for its intended use, "signal" for all signal and instrumentation handholes and "electrical" for all power handholes. Letter shall be a minimum of 3-inches high.

Part 3 – Execution

Installation

Conduits entering handholes shall have grounding bushings installed and the conduit ends shall be sealed with Permagum sealing compound. Where conduits enter through sides of handholes, the penetration shall be made watertight. Use a core drill wherever it is necessary to drill through concrete. Perform patch work with the same materials as the surrounding area and finish to match.

Pull boxes shall be provided at least every 150 feet on long straight runs. Spacing shall be reduced by 50 feet for each 90-degree bend.

Install handholes flush with finished grade in all paved areas, roadways and walkways. All handhole edges shall be flush with final surface.

16.15 Grounding and Bonding for Electrical Systems

[CSI 26 05 26]

Part 1 – General

References

Service and equipment grounding shall be per Article 250 of the NEC.

© 2023 RH2 Engineering, Inc.

Performance Requirements

Verify that a low-resistance ground path is provided for all circuits so an accidental contact to ground of any live conductor will instantly trip the circuit.

Part 2 – Products

Components

The grounding systems shall consist of the ground rods, grounding conductors, ground bus, ground fittings and clamps, and bonding conductors to water piping and structural steel as shown on the Plans.

System components shall be as allowed in the NEC unless specified otherwise below:

1. Ground Rods: Ground rods shall be cone pointed copper clad Grade 40 HS steel rods conforming to ASTM B228. The welded copper encased steel rod shall have a conductivity of not less than 27 percent of pure copper.
2. Ground Conductors: Buried conductors shall be medium-hard drawn bare copper; other conductors shall be soft drawn copper. Sizes over No. 6 AWG shall be stranded. Coat all ground connections except the exothermic welds with electrical joint compound, non-petroleum type, UL listed for copper and aluminum applications.
3. Ground Rod Boxes: Boxes shall be a 9-inch diameter precast concrete unit with hot-dip galvanized traffic cover. Boxes shall be 12-inches deep minimum. Covers shall be embossed with the wording "Ground Rod".

Part 3 – Execution

General Grounding Installation

When available a UFER ground per latest edition of NEC shall be provided as the primary means to ground the electrical system.

Ground electrical service neutral at service entrance equipment to supplementary grounding electrodes.

Ground each separately derived system neutral to nearest effectively grounded building structural steel member or separate grounding electrode.

Provide a ground rod box for each ground rod to permit ready access to facilitate testing.

Provide a ground wire in every conduit carrying a circuit of over 110 volts to ground.

Make embedded or buried ground connections, taps and splices with exothermic welds. Coat ground connections.

Bond metallic water piping at its entrance into each building.

Motor Grounding Installation

Extend equipment ground bus via grounding conductor installed in motor feeder raceway. Connect to motor frame.

When using nonmetallic flexible tubing install an equipment grounding conductor connected at both ends to noncurrent-carrying grounding bus.

© 2023 RH2 Engineering, Inc.

Vault and Handhole Grounding

Exposed noncurrent-carrying metal parts of equipment, conductor supports or racks, conduits, and other metal appurtenances, including any metal cover and its supporting ring, shall be bonded together and connected to a common ground. The size of the grounding means shall be as prescribed in the NEC. Where the grounding means is exposed, the grounding conductor shall be not smaller than #8 AWG copper.

Ground Connections

Above grade ground connections shall be exothermic weld, mechanical, or compression-type connectors; or brazing.

Below grade ground connections shall be exothermic weld.

Install all ground connections is strict accordance with connector manufacturer's recommendations and methods.

Testing

Following completion of the grounding electrode system, if installed, measure ground resistance at each ground rod using the three-rod method. Submit results to engineer prior to final acceptance by the Owner.

Perform testing per NETA Standard ATS paragraph 7.13. Testing methods shall conform to NETA Standard ATS using the three-electrode method for large systems. Conduct tests only after a period of not less than 48 hours of dry weather.

Furnish to the Engineer a test report with recorded data of each ground rod location. See Division 16.95.4.

16.20 UTILITY SERVICE

16.21 Electrical Service

[CSI 26 21 00]

Part 1 – General

Description of Work

Work consists of installation of a new 400 amp, 277/480-volt, 3 phase underground service, utilizing an existing pad-mounted transformer.

Scheduling Work with the Utility Company

The Contractor shall be fully and completely responsible for all scheduling and coordination with the utility company. The Contractor shall coordinate and schedule power outages, power service for operation and construction, and power service as may be required prior to Certification of Occupancy.

The Contractor shall make all necessary applications for service with the utility and shall notify the Owner in writing of any obligations that the Owner must fulfill for service to be started, installed, or modified.

© 2023 RH2 Engineering, Inc.

Contractor/Utility Interface Responsibilities

The electrical utility providing service to these facilities is Puget Sound Energy.

During design, contact was made with Customer Service Representative, Lonnie Adams, who can be contacted by telephoning (360)-764-6738. The division of responsibilities stated below has been determined by coordination with the serving utility. The Contractor shall comply with all utility company standards and requirements.

All utility charges for and related to the final permanent service to the facility will be paid by the Owner, directly to the utility company and shall not be included in the Contractors bid price.

Contractor shall notify the Engineer/Owner of any changes to the responsibilities between the electrical utility and the Contractor as outlined in these specifications prior to submitting a bid. Any change(s) in responsibilities not brought to the attention of the Engineer prior to bidding will not be cause for additional payment.

The Contractor shall notify the Owner (in writing) of any obligations or forms that the Owner is responsible to provide for service.

The Contractor shall:

Install new raceway and conductors for secondary service from the existing pad-mount transformer location to the proposed utility meter including trenching, backfill and restoration. Terminate service conductors at the utility meter.

Install utility meter enclosure, raceway, and conductors for utility revenue metering as shown on the Plans.

The Contractor shall meet all the standard requirements for working in the right-of-way which includes a utility representative on site during work within the right-of-way. The Contractor shall be responsible for paying all cost for the representative to be on site.

The Utility Company shall:

Terminate conductors on the secondary side of the transformer.

Install a utility revenue meter in the proposed main revenue metering enclosure installed by the Contractor.

Project Conditions

Before submitting a bid, the Contractor shall become familiar with all the electrical service requirements that may affect the execution of their work.

Standards and Codes

Work involving service installation shall be done in accordance with the service utilities standards and the NEC.

Service equipment shall be listed and labeled by UL as "suitable for use as service equipment".

© 2023 RH2 Engineering, Inc.

16.21.2 Electrical Utility Meter Enclosure

[CSI 26 27 13]

Manufacturers

Meter enclosure shall be a Circle AW or equal and as required to meet the requirement of the serving utility. Installation shall be in vandal proof NEMA 3R enclosure with a lockable hinged door. Meter shall include a metal vandal screen that can be purchased from serving utility.

Materials

Contractor shall coordinate with Puget Sound Energy on the type of metering required and shall provide all labor and material necessary to meet Puget Sound Energy requirements.

16.30 BASIC PANEL EQUIPMENT AND DEVICES

16.31 Operating and Indicating Devices

[CSI 26 09 00, 40 78 00]

Part 1 – General

Operating and indicating devices minimum rating shall be NEMA 13. Operator devices mounted in outdoor panels, corrosive areas or where exposed to moisture shall be NEMA 4X.

16.31.2 Run Time Meters

[CSI 26 09 13.22, 40 78 13.22]

Manufacturers

HECON GO series or equal.

Manufactured Units

Hour meter (elapsed time meters) shall be 2-inch by 1-inch nominal size, rectangular case type for flush panel mounting. The meter face shall be of the style that most closely resembles the panel indicating instruments if provided and shall have black trim with white or aluminized face. The meters shall have a 6-digit non-resettable register with the last digit indicating tenths of an hour.

16.31.3 Start Count Meters

[CSI 26 09 13.23, 40 78 13.23]

Manufacturers

HECON GO series, Redington Model 3400-2010 or equal.

Manufactured Units

Start counters shall be 2-inch by 1-inch nominal size, rectangular case type for flush panel mounting. The meter face shall be of the style that most closely resembles the panel indicating

© 2023 RH2 Engineering, Inc.

instruments if provided and shall have black trim with white or aluminized face. The meters shall have a 6-digit resettable register.

16.31.4 Indicating Lights

[CSI 26 09 13.31, 40 78 16]

Manufacturers

Heavy-Duty, Watertight, and Corrosion-Resistant Type:

- Eaton/Cutler-Hammer, Type E34
- Square D Co., Type SK
- Allen Bradley, Type 800H
- General Electric Co., Type CR 104P

Manufactured Units

Indicating lights shall be NEMA type 4/4X/13, corrosion resistant, water-tight, oil-tight, full voltage, push-to-test, high visibility 28 chips LED type. Pilot lights shall be rated for the proper operating voltage. Appropriate lens caps shall be provided as shown on Plans.

16.31.5 Selector Switch

[CSI 26 09 16.21 40 78 19.21]

Manufacturers

Heavy-Duty, Watertight, and Corrosion-Resistant Type:

- Eaton/Cutler-Hammer, Type E34
- Square D Co., Type SK
- Allen Bradley, Type 800H
- General Electric Co., Type CR 104P

Manufactured Units

Selector switches shall be NEMA type 4/4X/13, corrosion-resistant/watertight/oil-tight, type selector switches with contacts rated for 10 amperes continuous at proper operating voltage. Operators shall be black knob type. Units shall have the number of positions and contact arrangements and spring return function (if any) as shown on Plans. Units shall be single-hole mounting, accommodating panel thicknesses from $^{1}/_{16}$-inch minimums to ¼-inch maximum.

© 2023 RH2 Engineering, Inc.

16.31.6 Pushbuttons

[CSI 26 09 16.23, 40 78 19.25]

Manufacturers

Heavy-Duty, Watertight, and Corrosion-Resistant Type:

- Eaton/Cutler-Hammer, Type E34
- Square D Co., Type SK
- Allen Bradley, Type 800H
- General Electric Co., Type CR 104P

Manufactured Units

Pushbuttons shall be NEMA type 4/4X/13, corrosion-resistant/watertight/oil-tight, type push buttons with momentary contacts rated for 10-ampere continuous at proper operating voltage. Button color shall be as specified in control panels and shall have a full guard. Pushbutton contact arrangements shall be as shown on Plans. Size of pushbuttons as indicated on the Plans.

Special Functions

Pushbutton for "emergency stop" applications shall have maintained contacts and red mushroom head operators.

16.32 Panel Relays

[CSI 26 09 16, 40 78 53]

Part 1 – General

General

Relays shall be provided as necessary to perform switching functions required of control panels and other control circuits as shown on the Plans and described in the technical specifications. Appropriate relay type and associated contacts shall be selected based on the application from the control wiring diagrams or the functional description. Where timing relays and control relays require additional contacts, provide auxiliary control relays properly sized for the application.

All contacts and relays shall be NEMA rated and UL recognized.

The electrical life expectancy for the relay shall be over 500,000 operations at 120V AC, 10 amp; (over 200,000 operations at 120V AC, 10 amp for SPDT, 3PDT, and 4PDT). The mechanical life expectancy for the relay shall be over 50,000,000 operations.

© 2023 RH2 Engineering, Inc.

16.32.1 Control Relays

[CSI 26 09 16.31, 40 78 53.21]

Manufacturers

- Square D Class 8501, Type K or R
- Allen Bradley 700 Type HA or HB
- IDEC RH Series; or equal

Manufactured Units

Relays for general purpose use shall be DPDT or 3PDT, 10-amp contacts with the appropriate coil voltage for the application. Relays shall be plug-in type with matching socket. All relays shall have LED indicators to signal when the coil is energized. Relay coils shall be rated for continuous duty.

16.32.3 Time Delay Relays

[CSI 26 09 19.35, 40 78 53.25]

Manufacturers

- Allen-Bradley 700 Type HR
- IDEC GE1, RTE or GT3 Series; or equal

Manufactured Units

Time delay relays shall be multi-function, multi-range with plug-in base, pin style terminations timing and timed out LED indicators, and calibrated scales. Relays shall have minimum 0.5 seconds to 60 minutes, 8 selectable timing ranges, 5-amp contacts. Select coil voltage for the application. Units shall be sealed to prevent entry of contamination in the form of dust, dirt, or moisture.

Appropriate relay shall be selected based on application from the control wiring diagrams.

Minimum accuracy (plus or minus) shall be as follows:

1. Repeat accuracy – ½ percent.
2. Timing change over full voltage range – ½ percent change over full temperature range.
3. Scale tolerance – 5-percent.

© 2023 RH2 Engineering, Inc.

16.35 Control Panel Accessories

16.35.1 Terminal Blocks

[CSI 26 05 83 or 26 27 26]

Part 2 – Products

Manufactured Units

Terminal blocks shall be one-piece, molded, plastic blocks with screw-type terminals and barriers rated for 600 volts. Terminals shall be double-sided and supplied with removable covers to prevent accidental contact with live circuits. Terminals shall have permanent, legible identification, clearly visible with the protection cover removed.

Part 3 – Execution

Installation

All wires between panel-mounted equipment and other equipment shall be terminated at terminal blocks. Switches shall be terminated at the terminal blocks with crimp-type, pre-insulated, ring-tongue lugs. Lugs shall be of the appropriate size for their terminal block screws and for the number and size of the wires terminated. All wires shall be labeled with the circuit number and common function.

16.35.2 Nameplates

[CSI 26 05 53, 10 14 23]

Part 2 – Products

Manufactured Units

Standard nameplates shall be made of $^{1}/_{16}$-inch thick machine engraved laminated phenolic having black letters not less than $^{3}/_{16}$-inch high on white background. One-inch high lettering shall be used for the large nameplates required for the control panels and motor control centers.

Part 3 – Execution

Installation

Nameplates shall be provided on all electrical devices including but not limited to motor control equipment, MCC cubicles, control stations, junction boxes, panels, motors, instruments, switches, indicating lights, meters, and all electrical equipment enclosures. Each motor control center compartment and control panel shall have a nameplate designating the equipment and its identifying number and size or rating. Data shall be as shown on the Plans and reviewed via the submittal process. Nameplates shall have name, number and/or function as is applicable for clear identification.

Provide one large nameplate for each motor control center and/or control panel identifying the equipment as indicated on the Plans.

© 2023 RH2 Engineering, Inc.

Nameplates on steel panels shall be secured with stainless steel drive screws. Where it is proposed that nameplates will be secured with pressure sensitive tape or bonding cement, the process and samples shall be submitted to the Engineer for acceptance.

Nameplates shall be provided for identifying all operator interface (lights, switches, etc.) and other devices that are located outside or inside the panels.

Nameplates shall be provided for identifying all relays and devices that are located inside the panels.

Special Functions

Provide warning nameplates on all panels and equipment, which contain multiple power sources. Lettering shall be white on red background.

16.36.1 Surge Protection Device (SPD)

[CSI 26 43 13, 40 78 56]

Part 2 – Products

General

The SPD shall be compatible with the electrical system voltage, current, system configuration, and intended applications.

Manufacturers

The SPD shall be manufactured by main distribution panelboard manufacturer.

Manufactured Units

Protect the electrical service with an SPD device as shown on the Plans. The SPD shall be bus-mounted in the main distribution panelboard and connected with the shortest conductors possible. The SPD shall meet the following:

1. Provide surge current withstand up to 160 kA per phase.
2. Short circuit current rating of 200 kAIC.
3. A ten-year free replacement warranty.
4. Enhanced UL 1283 Transient Tracking Filter.
5. Status indicator lights for each phase and one service LED.

16.40 LOW VOLTAGE MOTOR CONTROL EQUIPMENT

[CSI 26 29 00]

© 2023 RH2 Engineering, Inc.

16.45 Variable Frequency Drive

[CSI 26 29 23]

Part 1 – General

Summary

The Variable Frequency Drive (VFD) system shall contain all components required to meet the performance, protection, safety, and certification criteria of this specification.

Related Sections

- Division 10.14 Signage
- Division 16.30 Basic Panel Equipment and Devices
- Division 17 Automatic Control

References

- National Fire Protection Association - NFPA 70 - US National Electrical Code.
- National Electrical Manufacturers Association - NEMA 250 - Enclosures for Electrical Equipment.
- Underwriters Laboratory Inc. – UL 508.
- Canadian Standards Association International – CAN/CSA-C22.2 No. 14-05.
- International Electrical Code - IEC 146.
- Institute of Electrical and Electronics Engineers, Inc. - IEEE 519 - IEEE Standard Practices and Requirements for Harmonic Control in Electrical Power Systems.
- Seismic Standards ASCE 7-10, IBC, CBC, ICC_ESAC156, IEEE 693 and California OSHPD.

Submittals

Submit under provisions of Sections 1.33 and 16.05.

<u>Shop Drawings - Approval</u>

1. Elevation Drawings: Include dimensional information and conduit routing locations.
2. Unit Descriptions: Include amperage ratings, enclosure ratings, fault ratings, nameplate information, and so on, as required for approval.
3. Wiring Diagrams:
   a) Power Diagram: Include amperage ratings, circuit breaker frame sizes, circuit breaker continuous amp ratings, and so on, as required for approval.
   b) Control Diagram: Include disconnect devices, pilot devices, and so on.
4. Major components list.

© 2023 RH2 Engineering, Inc.

Product Data Sheets

1. VFD and Operator Interface publications.
2. Data sheets and publications on all major components including, but not limited to, the following:
   a) Contactors
   b) Circuit breaker and fuse (power and control)
   c) Control power transformers
   d) Pilot devices
   e) Relays/Timers

Test procedures shall be per the manufacturer's standards.

Closeout Submittals (Operation and Maintenance Manuals)

Submit under provisions of Sections 1.79.2 and 17.94.

Shop Drawings – Final as shipped

1. Elevation Drawings: Include dimensional information and conduit routing locations.
2. Unit Descriptions: Include amperage ratings, enclosure ratings, fault ratings, nameplate information, and so on, as required for approval.
3. Wiring Diagrams:
   a) Power Diagram: Include amperage ratings, circuit breaker frame sizes, circuit breaker continuous amp ratings, and so on, as required for approval.
   b) Control Diagram: Include disconnect devices, pilot devices, and so on.
   c) Diagrams shall updated based on field modifications and shall be accurate depicting point-to-point wiring.
4. Major components list.

Product Data Sheets

1. VFD and Operator Interface publications.
2. Data sheets and publications on all major components including, but not limited to, the following:
   a) Contactors
   b) Circuit breaker and fuse (power and control)
   c) Control power transformers
   d) Pilot devices
   e) Relays/Timers

Test procedures shall be per the manufacturer's standards.

© 2023 RH2 Engineering, Inc.

Operation and Maintenance Data

1. Service and Contact information
2. VFD and Operator Interface User Manuals
3. Troubleshooting / Service Manuals

Quality Assurance

Qualifications:

1. Manufacturers:
   a) The VFD and all associated optional equipment shall be UL listed or recognized.
   b) The VFD shall contain a UL label attached on the inside of the enclosure cabinet.
2. Suppliers:
   a) All inspection and testing procedures shall be developed and controlled under the guidelines of the Supplier's quality system and must be registered to ISO 9001 and regularly reviewed and audited by a third-party registrar.
   b) The VFD shall be factory pre-wired, assembled and tested as a complete package.

Delivery, Storage, and Handling

Contractor shall coordinate the shipping of equipment with the manufacturer.

Contactor shall store the equipment in a clean and dry space at an ambient temperature range of -25 degrees Celsius to 55 degrees Celsius (-13 degrees Fahrenheit to 130 degrees Fahrenheit).

The Contractor shall protect the units from dirt, water, construction debris, and traffic.

Design Requirements

Drive(s) shall be of the size, capacity and quantity as shown on the Plans. VFD supplier shall confirm motor HP, amperage, service factor and operating requirements with motor supplier.

The VFD motor controller shall convert 480 Volt, 3-phase, 60 Hertz utility power to adjustable voltage (0 - 460V) and frequency (0 - 60 Hz.) 3-phase, AC power for stepless motor speed control with a capability of 10:1 speed range. All general options and modifications shall mount within the standard adjustable frequency controller enclosure.

The controller(s) shall be suitable for use with any standard NEMA-B squirrel-cage induction motor(s) having a 1.15 Service factor. At any time in the future, it shall be possible to substitute any standard motor (equivalent horsepower, voltage, and current) in the field.

The variable frequency control shall operate satisfactorily when connected to a bus supplying other solid-state power conversion equipment which may be causing up to 10 percent total harmonic voltage distortion and commutation notches up to 36,500-volt microseconds, or when other VFDs are operated from the same bus. Manufacturers shall certify at submittal time that their equipment will function satisfactorily under these circumstances.

Individual or simultaneous operation of the VFDs shall not add more than 5 percent total harmonic current distortion to the normal bus, nor more than 10 percent while operating from

© 2023 RH2 Engineering, Inc.

standby generator per IEEE 519, 2014. Prior to project completion, the Contractor shall provide verification through both measurement and calculations that the system is compliant with IEEE 519, 2014.

Part 2 – Products

Manufacturers

The VFD shall be an Allen-Bradley Powerflex 753 model VFD with EtherNet/IP communication interface or pre-approved equal. Approved manufacturers and models are as follows:

- Allen-Bradley – Powerflex 753, 755, and 755TS
- Schneider Electric – ATV900 Series
- Eaton – PowerXL DG1

All drives shall be supplied by one manufacturer.

Manufactured Units

The variable frequency control shall include transient voltage suppression to allow reliable operation on a typical industrial or commercial power distribution system.

<u>Hardware</u>

1. Utilize diode bridge or SCR bridge on the input rectifier.
2. Utilize DC bus inductor on all six-pulse VFDs only.
3. Utilize switching logic power supply operating from the DC bus.
4. Incorporate phase to phase and phase to ground MOV protection on the AC input line.
5. Microprocessor based inverter logic shall be isolated from power circuits.
6. Utilize latest generation IGBT inverter section.
7. Battery receptacle for Lithium battery power to the Real Time Clock.
8. Additional DPI port for handheld and remote HIM options.
9. Dedicated Digital Input for hardware enable.
10. Conformal coated printed circular boards.
11. Informal coated printed circuit boards.
12. Optional onboard 24V DC Auxiliary Control Power Supply.
13. The drive shall have the following specific features to enable integration with a Rockwell Automation ControlLogix™ or CompactLogix™ Automation Controller.
    a) Shall have Add on Profile available for use with Rockwell Automation Studio 5000 programming software.
    b) Shall support Rockwell Automation controller's Automatic Device Configuration functionality.

© 2023 RH2 Engineering, Inc.

Control Logic

1. Ability to operate with motor disconnected when in V/Hz mode.
2. Provide a controlled shut down, when properly protected, with no component failure in the event of an output phase to phase or phase to ground short circuit. Provide annunciation of the fault condition.
3. Provide multiple programmable stop modes including Ramp, Coast, DC-Brake, Ramp-to-Hold, Fast Braking, and Current Limit Stop.
4. Provide multiple acceleration and deceleration rates.
5. Adjustable output frequency up to 650 Hz.
6. Ability to control outputs and manage status information locally within the VFD.
7. Ability to function stand-alone or complementary to supervisory control.
8. Ability to provide scaling, selector switches, or other data manipulations not already built into the VFD.

Motor Control Modes

1. Selectable Sensorless Vector, Flux Vector, V/Hz, and Adjustable Voltage Control modes selectable through programming.
2. The drive shall be supplied with a Start-up and Auto-tune mode.
3. The V/Hz mode shall be programmable for fan curve or full custom patterns.
4. Capable of Open Loop V/Hz.

Current Limit

1. Programmable current limit from 20 percent to 160 percent of rated output current.
2. Current limit shall be active for all drive states: accelerating, constant speed and decelerating.
3. The drive shall employ PI regulation with an adjustable gain for smooth transition in and out of current limit.

Acceleration / Deceleration

1. Accel/Decel settings shall provide separate adjustments to allow either setting to be adjusted from 0 to 3600 seconds.
2. A second set of remotely selectable accel/decel settings shall be accessible through digital inputs.
3. S Curve profiles shall be adjustable.

Adjustments

1. A digital interface can be used for all set-up, operation and adjustment settings.
2. All adjustments shall be stored in nonvolatile memory (EEPROM).

© 2023 RH2 Engineering, Inc.

3. No potentiometer adjustments shall be required.
4. EEPROM memory for factory default values shall be provided.
5. Software must be available for trending and diagnostics, as well as online and offline programming functionality.

Process PID Control

1. The drive shall incorporate an internal process PI regulator with proportional and integral gain adjustments as well as error inversion and output clamping functions.
2. The feedback shall be configurable for normal or square root functions. If the feedback indicates that the process is moving away from the set-point, the regulator shall adjust the drive output until the feedback equals the reference.
3. Process control shall be capable of being enabled or disabled with a hardwire input. Transitioning in and out of process control shall be capable of being tuned for faster response by preloading the integrator.
4. Protection shall be provided for a loss of feedback or reference signal.

Skip Frequencies

1. Three adjustable set points that lock out continuous operation at frequencies which may produce mechanical resonance shall be provided.
2. The set points shall have a bandwidth adjustable from Maximum Reverse Speed to Maximum Forward Speed.

Fault Memory

1. The last 100 fault codes shall be stored and time stamped in a fault buffer.
2. Information about the drive's condition at the time of the last fault such as operating frequency, output current, dc bus voltage and twenty-seven other status conditions shall be stored.
3. A power-up marker shall be provided at each power-up time to aid in analyzing fault data.
4. The last 100 alarm codes shall be stored and time stamped for additional troubleshooting reference.

Fault Reset / Run

1. The drive shall provide up to nine automatic fault reset and restarts following a fault condition before locking out and requiring manual restart.
2. The automatic mode shall not be applicable to a ground fault, shorted output faults and other internal microprocessor faults.
3. The time between restarts shall be adjustable from 0.5 seconds to 30 seconds.

© 2023 RH2 Engineering, Inc.

Run on Power Up

1. A user programmable restart function shall be provided to allow restart of the equipment after restoration of power after long duration power outages. Restart time dependent on presence of incoming signal.

Overload Protection

1. The drive shall provide internal class 10 adjustable overload protection.
2. Overload protection shall be speed sensitive and adjustable.
3. A viewable parameter shall store the overload usage.

Auto Economizer

1. An auto economizer feature shall be available to automatically reduce the output voltage when the drive is operating in an idle mode (drive output current less than programmed motor FLA). The voltage shall be reduced to minimize flux current in a lightly loaded motor thus reducing kW usage.
2. When the load increases, the drive shall automatically return to normal operation.

Terminal Blocks

1. Separate terminal blocks shall be provided for control and power wiring.
2. I/O terminal blocks shall be removable with wiring in place.
3. For frames 8 to 10 power wiring is landed on robust L-brackets behind the drive unit. This wiring remains in-place if the drive unit is removed.

Flying Start

1. The drive shall be capable of determining the speed and direction of a spinning motor and adjust its output to "pick-up" the motor at the rotating speed. This feature is disabled by default.

Inputs and Outputs

1. The Input / Output option modules shall consist of both analog and digital I/O.
2. No jumpers or switches shall be required to configure digital inputs and outputs.
3. All digital input and output functions shall be fully programmable.
4. The control terminal blocks shall be rated for 115V AC.
5. Inputs shall be optically isolated from the drive control logic.
6. The control interface card shall provide input terminals for access to fixed drive functions that include start, stop, external fault, speed, and enable.

© 2023 RH2 Engineering, Inc.

7. The VFD shall be capable of supporting up to 7 analog inputs, 7 analog outputs, 21 digital inputs, 7 relay outputs, 7 transistor outputs, and 3 positive temperature coefficient (PTC) inputs.
8. The Input / Output option modules shall have the following features:
   a) Analog Inputs:
      i. Quantity two (2) differentially isolated, ±10V (bi-polar), 88k ohm input impedance, 4-20 mA, 11 bit plus sign.
      ii. Analog inputs shall be user programmable for a variety of uses including frequency command and process loop input. Analog inputs shall be user programmable for function scaling (including invert), offset, signal loss detect, and square root.
   b) Analog Outputs:
      i. Quantity two (2) ±10V (bi-polar) / 11 bit and sign, 2 k ohm minimum load, 4-20 mA, 11 bit plus sign, 400 ohm maximum load.
      ii. The analog output shall be user programmable to be proportional to one of fourteen process parameters including output frequency, output current, encoder feedback, output power.
      iii. Programming shall be available to select either absolute or signed values of these parameters.
   c) Digital Inputs:
      i. Quantity of six (6) digital inputs rated 24V DC/115V AC.
      ii. All inputs shall be individually programmable for multiple functions including: Start, Run, Stop, Auxiliary Fault, Speed Select, Jog and Process PI functions.
   d) Digital Outputs:
      i. At least one (1) relay output (N.O. or N.C.).
      ii. For 240V AC or 24V DC, N.O. contact output ratings shall be 2-amp maximum, general purpose (inductive)/resistive. N.C. contact output ratings shall be 2-amp maximum, resistive only.
      iii. Relays shall be programmable to multiple conditions including: Fault, Alarm, At Speed, Drive Ready, and PI Excess Error.
      iv. Timers shall be available for each output to control the amount of time, after the occurring event, that the output relay actually changes state.
      v. At least one (1) transistor output.
      vi. For 24V DC, transistor output rating shall be 1-amp maximum, Resistive.

<u>Reference Signals</u>

1. The drive shall be capable of using the following input reference signals:
   a) Analog Inputs
   b) Preset Speeds

© 2023 RH2 Engineering, Inc.

c) Remote Potentiometer

d) Digital MOP

e) Human Interface Module

f) Communication Modules

Loss of Reference

1. The drive shall be capable of sensing reference loss conditions.
2. In the event of loss of the reference signal, the drive shall be user programmable to the following:
   a) Fault the drive and coast to stop.
   b) Issue a minor fault - allows the drive to continue running while some types of faults are present.
   c) Alarm and maintain last reference.
3. When using a communications network to control the drive, the communications adapter shall have these configurable responses to network disruptions and controller idle (fault or program) conditions:
   a) Fault
   b) Stop
   c) Zero Data
   d) Hold Last State
   e) Send Fault Configuration

Metering

1. At a minimum, the following parameters shall be accessible through the Human Interface Module, if installed:
   a) Output Current in Amps
   b) Output Voltage in Volts
   c) Output Power in kW
   d) Elapsed MWh
   e) DC Bus Voltage
   f) Frequency
   g) Heatsink Temperature
   h) Last eight (32) faults
   i) Elapsed Run Time
   j) IGBT Temperature
   k) Blown fuses, including specific fuse locations communicated to the host system

© 2023 RH2 Engineering, Inc.

Faults

1. At a minimum, the following faults shall be accessible through the Human Interface Module:
   a) Power Loss
   b) Undervoltage
   c) Overvoltage
   d) Motor Overload
   e) Heat Sink Over-temperature
   f) Maximum Retries
   g) Phase to Phase and Phase to Ground Faults

Predictive Maintenance Features

1. At a minimum, the following predictive diagnostic features shall be provided, and a parameter showing the remaining lifetime expressed as hours of the following components will be available:
   a) Relay Output Life Cycles based on load type and amps.
   b) Hours of Fan Life based on load and ambient temperature.
   c) Motor Bearing life based on expected hours of use.
   d) Motor Lubrication schedule based on hours of use.
   e) Machine Bearing life based on expected hours of use.
   f) DC Bus Capacitors based on actual use (temperature, current, and ripple).
   g) IGBTs based on actual load and temperature.
   h) LCL filter Capacitors based on actual use.

Real-Time Clock

1. Shall be capable of providing time stamped events.
2. Shall have the ability to be set locally or via a remote controller.
3. Shall provide the ability to be programmable for month, day, year and local time zones in HH:MM:SS.

VFD Packaged System

Basic Features

1. Ratings
   a) Voltage
      i. Capable of accepting nominal power of 480V AC at 60 Hz.
      ii. The supply input voltage tolerance shall be ± 10 percent of nominal line voltage.

© 2023 RH2 Engineering, Inc.

b) Displacement Power Factor

i. Six-pulse VFD shall be capable of maintaining a minimum true power factor (Displacement P.F. X Distortion P.F.) of 0.95 or better at rated load and nominal line voltage, over the entire speed range.

c) Efficiency

i. A minimum of 96.5 percent (+/- 1 percent) at 100 percent speed and 100 percent motor load at nominal line voltage.

ii. Control power supplies, control circuits, and cooling fans shall be included in all loss calculations.

d) Operating ambient temperature range without derating: 0 degrees Celsius to 40 degrees Celsius (32 degrees Fahrenheit to 104 degrees Fahrenheit).

e) Operating relative humidity range shall be 5 percent to 95 percent non-condensing.

f) Operating elevation shall be up to 1,000 Meters (3,300 ft) without derating.

2. Sizing

a) Systems rated at Normal Duty loads shall provide 110 percent overload capability for up to one minute and 150 percent for up to 3 seconds.

b) Systems rated at Heavy Duty loads shall provide 150 percent overload capability for up to one minute and 180 percent for up to 3 seconds.

3. Auto Reset/Run

a) For faults other than those caused by a loss of power or any other non-critical fault, the drive system shall provide a means to automatically clear the fault and resume operation.

4. Ride-Through

a) The VFD system shall attempt to ride through power dips up to 20 percent of nominal. The duration of ride-through shall be inversely proportional to load. For outages greater than 20 percent, the drive shall stop the motor and issue a power loss alarm signal to a process controller, which may be forwarded to an external alarm signaling device.

5. Run on Power Up

a) The VFD system shall provide circuitry to allow for remote restart of equipment after a power outage. Unless indicated in the contact drawings, faults due to power outages shall be remotely resettable. The VFD system shall indicate a loss of power to a process controller, which may be forwarded to an external alarm signaling device. Upon indication of power restoration the process controller will attempt to clear any faults and issue a run command, if desired.

6. Communications

a) VFD shall be capable of communicating on multiple networks.

b) The VFD shall provide a Dual Port EtherNet/IP interface.

© 2023 RH2 Engineering, Inc.

c) VFD shall be capable of supporting the following network options:

i. DeviceNet

ii. EtherNet/IP

iii. ControlNet Coax

iv. ControlNet Fiber

v. Interbus

vi. CANopen

vii. Modbus/TCP

viii. Modbus RTU

ix. Profibus DP

x. RS-485 DF1

xi. RS-485 HVAC

xii. Remote I/O

7. Enclosure Door Mounted Human Interface Module (HIM)

a) VFD shall provide a HIM with integral LCD display, operating keys and programming keys.

b) An enclosure door-mounted HIM, rated NEMA/UL Type 4/12, shall be provided

c) The HIM shall have the following features:

i. A seven (7) line by twenty-one (21) character backlit LCD display with graphics capability.

ii. Shall indicate drive operating conditions, adjustments, and fault indications.

iii. Shall be configured to display in the following three distinct zones:

a. The top zone shall display the status of direction, drive condition, fault / alarm conditions, and Auto / Manual mode.

b. The middle zone shall display drive output frequency.

c. The bottom zone shall be configurable as a display for either programming menus / information or as a two-line user display for two additional values utilizing scaled units.

iv. Shall provide digital speed control.

v. The keypad shall include programming keys, drive operating keys (Start, Stop, Direction, Jog, and Speed Control), and numeric keys for direct entry.

<u>Enclosure</u>

1. Shall be rated NEMA/UL Type (12).

2. Shall be painted per the manufacturer's standard.

© 2023 RH2 Engineering, Inc.

3. Shall provide entry and exit locations for power cables.
4. Shall contain a label for UL508.
5. The drive system nameplate shall be marked with system Short Circuit Current Rating (SCCR).

Drive Enclosure Input Disconnect

1. Provide an enclosure door interlocked disconnect thermal magnet circuit breaker, or motor circuit protector.
2. Operator Handles
   a) Provide externally operated main disconnect handle.
   b) Handles shall be lockable with up to three lockout / tagout padlock positions.

Branch Circuit Protection

1. Input inverse time circuit breaker shall be provided

Control Power Transformer

1. Provide a control power transformer mounted and wired inside of the drive system enclosure.
2. The transformer shall be rated for the VFD power requirements.

Harmonic Mitigation Techniques

1. The drive system shall be compliant with IEEE 519-2014 standards at the input VFD terminals based upon the input power phase imbalance within 0.5 percent of nominal line voltage and under full VFD output current ratings
2. Passive Harmonic Filter
   a) VFDs shown with passive harmonic line filters shall be supplied with an input AC line harmonic filter compensated reactor with minimum 5 percent impedance unless noted otherwise on the one-line diagram. Line reactor shall be designed to address performance issues of NEMA MG1-20.55 and to provide proper transient protection of the VFD input power devices. Harmonic line filters shall be MTE Matrix Series AP Harmonic Filters or equal, with Capacitor Contactor for disconnecting the filter capacitor bank when the drive is not running.

Auxiliary Relays

1. Provide relays for Drive Alarm, Drive Ready, Drive Fault, Drive Run, and System Status Faults (as required).
2. See section 16.32.1 Relays.

Control Interface

1. The control terminals shall be rated for 115V AC.
2. The control interface shall provide input terminals for access to VFD functions that include start, stop, external fault, speed select, and enable, as required.

© 2023 RH2 Engineering, Inc.

Hand/Off/Auto Selector Switch

1. Provide a "HAND/OFF/AUTO" selector switch, mounted on the enclosure door.
2. The "HAND/OFF/AUTO" selector switch shall start the drive in the "HAND" mode and stop the drive in the "OFF" mode.
3. In the "AUTO" mode the drive shall be started and stopped from a remote "RUN" contact.
4. In all modes, Auxiliary and Enable inputs to the drive control interface board must be present before the drive will start.
5. When a HIM is present, the stop function shall always be available to stop the drive regardless of the selected mode ("HAND" or "AUTO"). The HIM will be non-functional (except for the display and programming) when the switch is in "OFF" mode. The HIM shall stop the drive if the switch is in the "AUTO" mode with the remote start contact initiated.
6. The drive speed reference shall be controlled from the HIM, unless a separate door-mounted potentiometer is provided, when in "HAND" mode (factory default setting).
7. The drive speed reference shall be controlled by a remote 4…20 mA input when in "AUTO" mode.
8. See section 16.31.5 Selector Switch.

Drive Disable Mushroom Push Button

1. Provide a maintained mushroom style push button, mounted on the enclosure door that when pushed, will open the drive enable input.
2. See section 16.31.4 Pushbuttons.

Pilot Lights

1. Provide LED pilot lights, mounted on the enclosure door, for indication of the following status:
   a) Run
   b) Drive Fault
   c) Control Power On
   d) Motor Fault
2. See section 16.31.6 Indicating Lights.

Motor Run Time Meter

1. Provide a digital, non-resettable, door-mounted elapsed time meter.
2. The meter shall be electrically interlocked with the Drive Run relay and Bypass contactor to indicate actual motor operating hours.
3. See section 16.31.2 Run Time Meters.

© 2023 RH2 Engineering, Inc.

Output Filtering

1. 5 percent output line reactor.
2. DV/DT output filter.

Part 3 – Execution

Setup

VFD Manufacturer shall program:

1. All fault settings to reset after fault condition returns to normal
2. Minimum and maximum motor speeds provided by motor manufacturer.
3. Hertz change per second.
4. Hand speed control shall be set to 95 percent of full range for panel mounted HOA switch.
5. EtherNet/IP and HIM module communication faults/alarms to "No Action". Communication errors should not shut down the VFD.
6. Parameter 150 (Digital In Cfg) to "Run Level", not "Run Edge".
7. Parameter 292 and I/O card parameters 106 and 116 (Life Event Parameter Settings) to "No Action" so that these life event alarms do not fault the VFD.

VFD Supplier shall provide documentation on how to control the drive over EtherNet/IP. This information should include a unique list of parameter, relay, setpoint, input/output, and control addressing as shown on the Plans and detailed in these specifications. A generic list does not meet this requirement. An Add-on-instruction or profile compatible with Rockwell Automation Studio 5000 programming would meet this requirement.

Examination

Verify that location is ready to receive equipment.

Verify that the building environment can be maintained within the service conditions required by the manufacturer of the VFD.

Testing

This equipment shall be tested and placed into operation by a qualified factory representative trained in start-up and troubleshooting procedures for equipment being installed.

All components shall be factory tested both by the manufacturer at the manufacturer's facility and in the presence of the Engineer by the manufacturer or manufacturer's representative at the manufacturer's facility or at a Control System Integrator's shop located within 100 miles of the job site. Factory testing shall be witnessed by the Engineer. If factory witness testing is to occur at the manufacturer's facility, the manufacturer's facility where testing takes place shall be located within the United States of America. Shipment of VFD to the job site shall not be allowed until the Engineer has witnessed factory testing and approved the VFD for shipment to the job site.

© 2023 RH2 Engineering, Inc.

Installation

Installation shall be in compliance with all manufacturer requirements, instructions, and drawings.

Startup

At a minimum, the start-up service shall include:

1. Perform pre-Power Check
2. Megger Motor Resistances: Phase-to-Phase and Phase-to-Ground
3. Verify system grounding per manufacturer's specifications
4. Verify power and signal grounds
5. Check connections
6. Check environment

Drive Power-up and Commissioning:

1. Measure Incoming Power Phase-to-Phase and Phase-to-Ground
2. Measure DC Bus Voltage
3. Measure AC Current Unloaded and Loaded
4. Measure Output Voltage Phase-to-Phase and Phase-to-Ground
5. Verify input reference signal

All measurements shall be recorded.

Drive shall be tuned for system operation.

Drive parameter listing shall be provided.

The line side converter shall be configured and tuned for the local input power conditions.

The motor side inverter shall be tuned for system operation.

Training

Manufacturer to provide a quantity of one 4-hour sessions of on-site instruction.

The instruction shall include the operational and maintenance requirements of the variable frequency drive.

The basis of the training shall be the variable frequency drive, the engineered drawings and the user manual. At a minimum, the training shall:

1. Review the engineered drawings identifying the components shown on the drawings.
2. Review starting / stopping and speed control options for the controller.
3. Review operation of the HIM for programming and monitoring of the variable frequency drive.

© 2023 RH2 Engineering, Inc.

4. Review the maintenance requirements of the variable frequency drive.
5. Review safety concerns with operating the variable frequency drive.

16.50 PANELBOARDS

[CSI 26 24 00]

16.52 Panelboards

[CSI 26 24 16]

Part 1 – General

Description of Work

This section covers the furnishing and installation of all panelboard equipment complete.

Quality Assurance

Provide products specified in this Section that are listed and labeled as defined in NEC Article 100.

Standards and Codes

All materials and equipment specified herein shall, within the scope of UL Examination Services, be approved by the Underwriter's Laboratories for the purpose for which they are used and shall bear the UL label.

All material and equipment specified herein shall conform with all applicable NEMA, ANSI, and IEEE standards.

All materials and equipment specified herein, and their installation methods shall conform to the latest published version of the NEC.

Part 2 – Products

Manufacturers

Materials, equipment, and accessories specified in this section shall be products of:

- Eaton/Cutler-Hammer
- Schneider Electric/Square D Company
- Siemens

Panelboards shall be of the same manufacturer as equipment furnished under Section 16.50, Low Voltage Motor Control.

© 2023 RH2 Engineering, Inc.

Components

Panelboard Type

1. Panelboards shall be rated at proper voltage and current for intended use with bus bars of copper. Panels shall be 3-phase, 4-wire, 100 percent neutral, with equipment ground bar unless noted otherwise. Panelboards shall be dead front.

Wire Terminations

1. Panelboard assemblies, including protective devices, shall be suitable for use with 75 degrees Celsius or greater wire insulation systems at NEC 7 degrees Celsius conductor ampacity in accordance with UL 486E.

Load Current Ratings

1. Unless otherwise indicated, load current ratings for panelboard assemblies, including bus and circuit breakers, are non-continuous as defined by NEC. Continuous rating shall be 80 percent of non-continuous rating.
2. Where indicated "continuous", "100 percent", etc., selected components and protective devices shall be rated for continuous load value shown.
3. The following interrupting capacity shall be considered minimum. Other ratings shall be as specified on the Plans.

240V and 208Y/120V Panelboards	22,000 AIC symmetrical
480V/277V Panelboards	40,000 AIC symmetrical

Overcurrent Protective Devices

1. In accordance with NEMA AB 1, NEMA KS 1, UL 98 and UL 489, protective devices shall be adapted to panelboard installation.
2. Panelboards shall be capable of device replacement without disturbing adjacent devices and without removing main bus.
3. Spare Spaces: Cover openings with easily removable cover.
4. When not identified on Plans, provide minimum of 18 single-pole breaker spaces.

Circuit Breakers

1. Provide thermal-magnetic unless otherwise indicated, quick-make, quick-break, molded case, of indicating type showing ON/OFF and TRIPPED positions of operating handle. Mount breakers in all panelboards so that the breaker handles operate in a horizontal plan.
2. The bus connection shall be bolt-on circuit breakers in all panelboards. In power distribution panelboards, 225-ampere frame sizes and greater may be plug-in type where individual positive locking device requires mechanical release for removal.
3. Trip Mechanism:
   a) Individual permanent thermal and magnetic trip elements in each pole.

© 2023 RH2 Engineering, Inc.

b) Test button on cover.

c) Variable magnetic trip elements with a single continuous adjustment 3X to 10X for frames greater than 100 amps.

d) Two and three pole breakers shall have common trip.

e) Automatic opens all poles when overcurrent occurs on one pole.

f) Calibrated for 40 degrees C ambient, unless shown otherwise.

Ground Fault Circuit Interrupter (GFCI)

1. Where indicated, equip breaker as specified above with ground fault sensor rated to trip on 5-mA ground fault with 0.025 second (UL 943, class A sensitivity, for protection for personnel).
2. Ground fault sensor shall be rated same as circuit breaker.
3. GFCI shall have a push-to-test button and a reset button.

Equipment Ground Fault Interrupter (EGFI)

1. Where indicated, equip breaker as specified above with ground fault sensor rated to trip on 30-mA ground fault (UL listed for equipment ground fault protection).

Cabinets for Each Panelboard

1. Cabinets shall be flush, or surface mounted as indicated on the Plans with tight closing doors without play when latched. Where two cabinets are located adjacent to each other in finished areas, provide matching trim of the same height.
2. Provide cabinets of sufficient dimensions to allow for future expansion and addition of circuit breakers within the panelboards as indicated on the Plans.
3. Provide locks for each cabinet door. All electrical distribution equipment locks are to be keyed identically.
4. Fasten panelboard with machine screws with oval countersunk heads, finish hardware quality, with escutcheons or approved trim clamps. Clamps assessable only when dead front door is open are acceptable. Surface mounted panelboards with fronts greater than 48 inches vertical dimension shall have trim hinged at the right side in addition to the hinged door over dead front.
5. Material for Type 1, Type 3R, and Type 3S cabinets shall be code-gauge, hot-dip galvanized sheet steel with reinforced steel frame.
6. Finish all enclosures with rust inhibitor primer followed by manufacturer's standard gray baked enamel or lacquer.

Bus

1. Material for internal bus shall be full size copper throughout length. Provide for mounting of future protective devices along full length of bus regardless of number of units and spaces shown. Machine, drill and tap as required for current and future positions.

© 2023 RH2 Engineering, Inc.

Feeder Lugs

1. Main and neutral feeder lugs shall be replaceable, bolted mechanical or crimp compression type.

Equipment Ground Terminal Bus

1. Provide copper equipment ground terminal bus with suitably sized provisions for termination of ground conductors. The terminal bus shall be bonded to the enclosure.
2. Provide individual mechanical termination points no less than the quantity of breaker pole positions.
3. Provide individual termination points for all other grounding conductors such as feeder, grounding electrodes, etc.

Neutral Terminal Bus

1. Provide copper neutral terminal bus with suitably sized provisions for termination of neutral conductors. The neutral bus shall be isolated from the enclosure.
2. Provide individual mechanical termination points no less than the quantity of breaker pole positions.
3. Provide individual termination points for all other neutral conductors.
4. Termination points shall be bolted crimp compression lugs for conductors 6 AWG or larger.

Part 3 – Execution

General

Install in accordance with NECA 407, NEMP PB 1.2 and manufacturers' written installation instructions.

Installation

Install securely, plumb, in-line and square with walls.

Install top of panelboard trim 72 inches above floor, unless otherwise shown. Install panelboard so tops of protective device operating handles are no more than 72 inches above the floor.

Install filler plates in unused spaces.

System of Numbering and Bus Arrangement

System numbering and bus arrangement shall be as shown on the panel schedule on the Plans.

Panelboard Nameplate

Provide engraved plastic nameplate with ½-inch high characters for panel identifications (for panel name) attached with screws to each panelboard front. Include voltage, phase and wire (i.e., 208Y/120, 3-phase, 4-wire) in ⅜-inch characters.

© 2023 RH2 Engineering, Inc.

Circuit Index

Provide as-built information for each branch circuit panelboard by circuit with its proper load designation.

Ground Fault Protection

Install panelboard ground fault circuit interrupter devices in accordance with installation guidelines of NEMA 289.

16.55 Switches and Protective Devices

[CSI 26 18 00 (medium voltage) 26 28 00 (low voltage)]

16.55.1 Common Work for Switches and Protective Devices

[CSI 26 18 05, 26 28 05]

Part 1 – General

Design Requirements

Overcurrent devices shall be NEMA rated.

Extra Materials

Provide one fuse for each ungrounded conductor and a minimum of one spare fuse per phase of each ampacity and voltage used on the project. Deliver fuses to Owner at the completion of the project.

Part 3 – Execution

Installation

Overcurrent protection devices and safety switches shall be centered 60 inches above the finished floor unless noted otherwise on the Plans.

16.55.13 Fuses

[CSI 26 18 16, 26 28 13]

Part 1 – General

Design Requirements

Fuses shall be of the type and amperage indicated on the Plans. The voltage rating shall be appropriate for the application indicated. The fuse types indicated on the Plans imply a certain set of fuse characteristics. No substitutions of fuse types will be allowed without Engineer approval.

© 2023 RH2 Engineering, Inc.

Part 2 – Products

Manufacturers

Fuses shall be:

- Bussman,
- Gould Shawmut
- Littlefuse
- Reliance
- Or Equal

Materials

Fuses in motor circuits which are indicated but not sized, shall be provided with Manufacturer's recommended size based on the actual motor installed. In-line or integrally-mounted fuse clips shall be provided on all control power or low-voltage transformers.

16.55.16 Molded Case Circuit Breakers

[CSI 26 28 16.14]

Part 1 – General

Design Requirements

Breakers shall have the interrupting rating and trip rating indicated on the Plans. All breakers shall be calibrated for operation in an ambient temperature of 40 degrees Celsius.

Part 2 – Products

Manufactured Units

Molded case circuit breakers shall be quick-make and quick-break type with wiping type contacts. Each breaker shall be provided with arc chutes and individual trip mechanisms on each pole consisting of both thermal and magnetic trip elements. Two and three pole breakers shall be common trip. Molded case circuit breakers shall be trip-free. Each breaker shall have trip indication independent of the "ON" or "OFF" positions.

16.55.18 Disconnect Switches

[CSI 26 28 16.17]

Part 1 – General

Design Requirements

Furnish and install disconnect switches conforming to NEMA KS 1, type HD, sized for the ampere and voltage as shown on the Plans and as required by the NEC and nameplate requirements of the equipment served.

© 2023 RH2 Engineering, Inc.

Part 2 – Products

Manufactured Units

The switches shall be 600-volt type and horsepower rated. Auxiliary contacts shall be provided as indicated on the Plans.

Part 3 – Execution

Installation

Provide additional disconnects if required by Code.

16.60 CONDUCTORS

16.61 Low Voltage Wire and Cable

[CSI 26 05 19]

Part 1 – General

Design Requirements

This section is for power and control conductors for 600 volts or less.

All conductors shall be copper. Wire or cable not shown on the Plans or specified, but required, shall be of the type and size required for the application and in conformance with the applicable code.

Part 2 – Products

Materials

Conductors

1. Solid and stranded copper wire shall be 600-volt Type THW, THWN, or THHW, Class B stranding, sizes #14 AWG, #12 AWG, and #10 AWG only. Use of THHN insulation shall not be allowed. Aluminum conductors shall not be allowed.
2. Stranded copper wire shall be 600-volt Type XHHW, Class B stranding, sizes #8 AWG and larger. Aluminum conductors shall not be allowed.

Splices

1. For Lighting Systems and Power Outlets: Wire nuts shall be twist-on type insulated connectors utilizing an outer insulating cover and a means for connecting and holding the conductors firmly.
2. All Equipment: Crimp type connectors shall be insulated type, suitable for the size and material of the wires and the number of wires to be spliced and for use with either solid or stranded conductors.
3. Division 16 Equipment and Power Conductors: Bolted pressure connectors shall be suitable for the size and material of the conductors to be spliced.
4. All Equipment: Epoxy splice kits shall include epoxy resin, hardener, mold, and shall be suitable for use in wet and hazardous locations.

© 2023 RH2 Engineering, Inc.

Terminations

1. Crimp type terminals shall be self-insulating sleeve type, with ring or rectangular type tongue, suitable for the size and material of the wire to be terminated, and for use with either solid or stranded conductors.
2. Terminal lugs shall be split bolt or bolted split sleeve type in which the bolt or set screw does not bear directly on the conductor.
3. Wire Markers shall be plastic sleeve type. Wire numbers shall be permanently imprinted on the markers.

Finishes

Color Coding: Provide color coding for all circuit conductors. Insulation color shall be white for neutrals and green for grounding conductors. An isolated ground conductor shall be identified with an orange tracer in the green body. Ungrounded conductor colors shall be as follows:

1. 120/208 Volt, 3 Phase: Red, black and blue.
2. 277/480 Volt, 3 Phase: Yellow, brown and orange.
3. 120/240 Volt, 1 Phase: Red and black.

Part 3 – Execution

Location (Installment) Schedule

Provide the following conductors for the following applications:

1. Use stranded copper conductors for all power and control circuits unless noted otherwise on plans or below. Size as noted on the Plans.
2. Contractor may use solid copper conductors for lighting and receptacle circuits using screw-type terminals. Size as noted on the Plans.
3. Size #14 AWG wire or smaller shall not be allowed on power circuits.

Installation

Conductor Splices

1. Splices: Install all conductors without splices unless necessary for installation, as determined by the Engineer. Splices when permitted shall be completed using an approved splice kit intended for the type of conductor and the application. The splice shall be in accordance with the splice kit manufacturer's instructions.
2. Underground Splices: All underground outdoor splices when approved by Engineer shall be completed in an accessible pullbox or handhole using an approved watertight epoxy resin splice kit rated for the application up to 600 volts. Splices will not be allowed to be direct buried.

Conductor Identification

1. Except for interior lighting and receptacle circuits, identify each wire or cable at each termination and in each pullbox, junction box, handhole, and manhole using numbered

© 2023 RH2 Engineering, Inc.

and lettered wire markers. All electrically common conductors shall have the same number. Each electrically different conductor shall be uniquely numbered. Identify panelboard circuits using the panelboard identification and circuit number. Identify motor control circuits using the equipment identification number assigned to the control unit by the motor control center manufacturer and the motor control unit terminal number. Identify other circuits as shown in the circuit schedule as favorably by the Engineer.

2. Conductors between terminals of different numbers shall have both terminal numbers shown at each conductor end. The terminal number closest to the end of the wire shall be the same as the terminal number.

Testing

Insulation Resistance Tests: For all circuits 150 volts to ground or more and for all motor circuits over ½ horsepower, test cables per NETA Paragraph 7.3.1. The insulation resistance shall be 20 megohms or more. Submit results to Engineer for review.

16.63 Signal Cable

[CSI 27 15 00]

Part 2 – Products

Materials

Twisted Shielded Pairs (TSP)

1. Cable shall conform to IEEE 383, UL 13, and UL 83 and shall be type PLTC cable suitable for direct burial. Each TSP shall consist of two #16 AWG, 7-strand copper conductors per ASTM B8 with 15 Mils PVC insulation and individual conductor jacket of nylon. Conductors shall be twisted with 2-inch or shorter lay, with 100 percent foil shielding and tinned copper drain wires. The cable shall have an overall PVC jacket with a thickness of 35 Mils. The insulation system shall be rated at 90 degrees Celsius and for operation at 600 volts.

Cat 5E Ethernet Cable

1. The Ethernet cable shall be shielded 600V UL rated. The use of a 300V rated cable is not acceptable. All Ethernet cable terminating outside of a telemetry panel shall be grounded at the telemetry panel only.
2. Ethernet cables shall be industrial type Ethernet cable and UL listed for installation in the Motor Control Center. Ethernet cables shall be Allen-Bradley Ethernet Cable with metal In-cabinet RJ45 Connectors, no substitutions.

Fiber Optic Cable

1. Fiber optic cable shall be OM2 50/125 multimode fiber cable. Cable jacketing shall be orange and OFNR riser rated for vertical-run and general use. Provide cable with high grade PVC molded strain relief. Each fiber optic cable shall have an ST type connector for termination at Ethernet switches and fiber optic patch panels. Cables shall be listed and marked in accordance with the requirements of the NEC.

© 2023 RH2 Engineering, Inc.

Part 3 – Execution

Installation

Cable Installation

1. Cables shall be continuous from initiation to termination without splices.
2. Cable shielding shall be grounded at one end of the cable only. Bonding shall be to a single ground point only. Bonding from cable to cable in multiple run installations shall not be permitted.
3. Install instrumentation cables in separate raceway systems with voltages not to exceed 30 volts DC.

Conductor Identification

1. Except for interior lighting and receptacle circuits, identify each wire or cable at each termination and in each pullbox, junction box, handhole, and manhole using numbered and lettered wire markers. All electrically common conductors shall have the same number. Each electrically different conductor shall be uniquely numbered. Identify panelboard circuits using the panelboard identification and circuit number. Identify motor control circuits using the equipment identification number assigned to the control unit by the motor control center manufacturer and the motor control unit terminal number. Identify other circuits as shown in the circuit schedule as determined by the Engineer.
2. Conductors between terminals of different numbers shall have both terminal numbers shown at each conductor end. The terminal number closest to the end of the wire shall be the same as the terminal number.

Testing

Insulation Resistance Tests: Perform insulation resistance on all circuits. Make these tests before any equipment has been connected. Test the insulation with a 500 Vdc insulation resistance tester with a scale reading 100 mega ohms. The insulation resistance shall be 20 mega ohms or more. Submit results to Engineer for review.

16.70 RACEWAYS, BOXES, AND FITTINGS

[CSI 26 05 33]

16.71 Raceways

[CSI 26 05 33.23]

Part 1 – General

Design Requirements

Conduit sizes not noted on Plans shall be in accordance with NEC requirements for the quantities and sizes of wire installed therein.

Grounding of the raceway, junction boxes, fittings and any other boxes is the responsibility of the Contractor. Ground conductors, bushings, connections, clamps and other materials as

© 2023 RH2 Engineering, Inc.

needed to ground the raceway system is the responsibility of the Contractor. All raceways shall be grounded in accordance with the NEC.

Part 2 – Products

Components

Conduit and Fittings

1. Galvanized Rigid Steel (GRS): Rigid conduit shall be steel, hot dipped galvanized inside and out. The GRS must meet USA Standards Institute C80-1 Underwriters Laboratories Standard UL6 and carry a UL label. Use cast threaded hub fittings and junction boxes for all rigid conduit except in locations not permitted by the NEC.
2. PVC Coated Rigid Steel Conduit (PVC-GRS): PVC coated conduit shall meet the GRS standard above plus have a 40 Mil PVC factory applied PVC coating.
3. Nonmetallic Conduit: Nonmetallic Conduit shall be rigid PVC, Schedule 40 (PVC-40) or 80 (PVC-80). PVC conduit installed above grade shall be Schedule 80 extra heavy wall 90 degree Celsius. UL listed for aboveground use and UV resistant. Conduit shall be gray in color. Fittings shall be of the same material as the raceway and installed with solvent per the Manufacturer's instructions. Conduit, fittings, and solvent shall all be manufactured by the same Manufacturer.
4. Flexible Metal Conduit (Flex-LT): Flexible conduit shall be interlocking single strip, hot dipped galvanized and shall have a polyvinyl chloride jacket extruded over the outside to form a flexible watertight raceway. Flexible conduit shall be American Brass Company Sealtite Type VA, General Electric Type UA or equal.
5. Electrical Metallic Tubing (EMT): EMT shall be UL 797 and ANSI C80.3; steel tubing, hot dipped galvanized. EMT fittings shall be ANSI/NEMA FB 1; steel, rain tight, insulated throat, compression type.

Conduit and Cable Supports

1. Conduit Supports: Hot dipped galvanized framing channel shall be used to support groups of conduit. Individual conduit supports shall be one-hole galvanized malleable iron pipe straps used with galvanized clamp backs and nesting backs where required. Conduit support for PVC or PVC coated rigid steel shall be one-hole PVC or epoxy coated clamps or PVC conduit wall hangers.
2. Ceiling Hangers: Ceiling hangers shall be adjustable galvanized carbon steel rod hangers. Unless otherwise specified, hanger rods shall be ½-inch all-thread rod and shall meet ASTM A193. Hanger rods in corrosive areas and those exposed to weather or moisture shall be stainless steel.

Wireways

1. General: Wireways shall consist of prefabricated channel-shaped, lay-in trough with hinged convers, associated fittings and supports. Straight section shall not be longer than 5 feet. Use 45-degree elbow and tees at all transition points. Cross-sectional dimensions shall be as indicated on the Plans. Fittings shall consist of elbows, tees, crosses and closing plates as required. Wireways shall be designed for continuous grounding.

© 2023 RH2 Engineering, Inc.

2. Finish: Rust inhibiting primer and manufacturers standard paint inside and out except of stainless-steel type.
3. Standards: UL 870, NEMA 520
4. Watertight (NEMA 4X rated) Wireway
   a) 14-gauge Type 304 or 316 stainless steel bodies and covers without knockouts and 10-gauge stainless steel flanges.
   b) Cover: Fully gasketed and held in place with captive clamp type latches.
   c) Flanges: Fully gasketed and bolted.
5. Dust-tight (NEMA 12 rated) Wireway
   a) 14-gauge steel bodies and covers without knockouts and 10-gauge steel flanges.
   b) Cover: Fully gasketed and held in place with captive clamp type latches.
   c) Flanges: Fully gasketed and bolted.

Conduit Sealants

1. Moisture Barrier Types: Sealant shall be a non-toxic, non-shrink, non-hardening, putty type hand applied material providing an effective barrier under submerged conditions.
2. Fire Retardant Types: Fire stop material shall be a reusable, non-toxic, asbestos-free, expanding, putty type material with a 3-hour rating in accordance with UL 1479. Provide products indicated by the manufacturer to be suitable for the type and size of penetration.

Part 3 – Installation

Raceway Applications

Galvanized Rigid Steel (GRS) conduit shall be used in all locations unless noted otherwise below or on the Plans.

ABOVE GRADE CONDUITS (non-corrosive areas) shall be:

1. GRS for power and control wiring.
2. GRS for instrumentation and telecommunications wiring.
3. GRS for motor leads from VFDs.
4. EMT for above-grade lighting circuits.

ABOVE GRADE CONDUITS (wet or corrosive areas, NFPA 70 hazardous areas) shall be:

1. PVC-GRS for power and control wiring.
2. PVC-GRS for instrumentation and telecommunications wiring.
3. PVC-GRS for motor leads from VFDs.

CONCEALED ABOVE GRADE CONDUITS shall be:

1. GRS for all wire and cable types in wood stud frame walls.
2. PVC-40 for power and control wiring in concrete block or brick walls.

© 2023 RH2 Engineering, Inc.

3. PVC-40 for instrumentation and telecommunications wiring in CMU or brick walls.
4. GRS for motor leads from VFDs in CMU or brick walls.

BELOW GRADE CONDUITS IN DIRECT EARTH (not under slabs-on-grade) shall be:

1. PVC-40 for power and control wiring.
   a) Sweeps and risers for transition of PVC from below grade to above grade shall be PVC-GRS.
2. PVC-GRS for instrumentation and telecommunications wiring.
3. PVC-GRS for motor leads from VFDs.

UNDER SLABS-ON-GRADE CONDUIT shall be:

1. PVC-40 for power and control wiring
   a) Sweeps and risers for transition of PVC from below grade to above grade shall be PVC-GRS.
2. PVC-GRS for instrumentation and telecommunications wiring.
3. PVC-GRS for motor leads from VFDs.

CONCRETE-ENCASED CONDUITS shall be:

1. PVC-40 for power and control wiring
   a) Sweeps and risers for transition of PVC from below grade to above grade shall be PVC-GRS.
2. PVC-40 for instrumentation and telecommunications wiring.
   a) Sweeps and risers for transition of PVC from concrete-encasement to above grade shall be PVC-GRS.
3. PVC-GRS for motor leads from VFDs.

ALL CONNECTIONS TO VIBRATING EQUIPMENT OR MOTORS shall be:

1. Liquidtight flexible metallic conduit for indoor, non-corrosive areas and all motor leads from VFDs.
2. Connection to equipment outdoors or in corrosive areas shall be with non-metallic liquidtight flexible conduit (except for motor leads from VFDs shall be flexible metallic.)

Installation

All conduits shall be concealed in the floor, walls, ceiling slab, or beneath the floor slab. Surface mounted conduit will not be accepted unless noted otherwise on the construction Plans.

<u>Size of Raceways</u>:

1. Raceway sizes as shown on the Plans, if not shown on the Plans, then size in accordance with NFPA 70.

© 2023 RH2 Engineering, Inc.

2. Unless specifically indicated otherwise, the minimum raceway size shall be:
   a) Conduit: ¾-inch
   b) Wireway: 4-inch by 4-inch

All raceways shall contain a separate grounding conductor.

Spare conduits shall contain one $^{3}/_{16}$-inch diameter nylon pull rope.

Conduit routing is shown diagrammatic on the Plans. Contractor is responsible for routing the conduits in a neat manner, parallel and perpendicular to walls and ceilings.

Location of conduit ends are shown approximately. Contractor is responsible for ending conduits in location that will not conflict with electrical equipment. Route conduit ends to facilitate ease of equipment maintenance. Conduits extending from the floor to a device shall be located as close as possible to avoid creating a hazard.

Conduit shall not be routed on exterior of structures except as specifically indicated on the Plans.

Where water cannot drain to openings, provide drain fittings in the low spots of the conduit run.

Securely fasten raceways at intervals and locations required by NEC, or the type of raceway employed.

Provide all required openings in walls, floors and ceilings for conduit penetration.

1. Do not install one (1) inch and larger raceways in or through structural members (beams, slabs, etc.) unless approved by Engineer.
2. New Construction: Avoid cutting openings, where possible, by setting sleeves or frames in masonry and concrete, and by requesting openings in advance.
3. Existing Construction: Core drill openings in masonry and concrete. Avoid structural members and rebar.

Conduit encasement or embedment in the earth shall be separated from the earth by at least 3-inches of concrete unless otherwise shown on the Plans. Plastic conduit spacers shall be located five feet on centers. The spacers shall be secured to the conduits by wire ties. The conduits shall be watertight.

Analog signal conduits shall be separated from power or control conduits. The separation shall be a minimum of 12-inches for metallic conduits and 24-inches for nonmetallic conduits.

Install explosion-proof seal-offs in hazardous areas shown on the Plans and as required by the NEC.

Plastic raceway joints shall be solvent cemented in accordance with recommendations of raceway manufacturer.

All conduit openings not encased in a panel shall be sealed with duct seal.

© 2023 RH2 Engineering, Inc.

Wireway Installation

1. Straight sections and fittings shall be solidly bolted together to be mechanically rigid and electrically continuous. Dead ends shall be closed. Unused conduit openings shall be plugged.
2. Wireways shall be supported every 5 feet minimum.

16.72 Boxes and Enclosures

16.72.2 Outlet and Junction Boxes

[CSI 26 05 33.16]

Part 1 – General

Design Requirements

In corrosive areas, all junction boxes shall be NEMA 4X.

Outlet boxes and switch boxes shall be designed for mounting flush wiring devices.

Outlet boxes shall not be less than 4-inch square and 1½-inch deep. Ceiling boxes shall withstand a vertical force of 200 pounds for five minutes. Wall boxes shall withstand a vertical downward force of 50 pounds for five minutes.

Part 2 – Products

Materials

Use cast boxes with threaded hubs for all rigid and intermediate conduits. Steel boxes may be used with rigid and intermediate conduits where cast boxes are not allowed by the NEC. All boxes shall be of proper size to accommodate devices, connectors, and number of wires present in the box. Boxes shall be readily accessible.

Cast box bodies and cover shall be cast or malleable iron with a minimum wall thickness of ⅛-inch at every point, and not less than ¼-inch at tapped holes for rigid conduit. Bosses are not acceptable. Mounting lugs shall be provided at the back or bottom corners of the body. Covers shall be secured to the box body with No. 6 or larger brass or bronze flathead screws. Boxes shall be provided with neoprene cover gaskets. Outlet boxes shall be of the FS types. Boxes shall conform to FS W-C-586C and UL 514.

Sheet metal boxes shall conform to UL 50, with a hot-dipped galvanized finish conforming to ASTM A123. Boxes and box extension rings shall be provided with knockouts. Boxes shall be formed in one piece from carbon-steel sheets.

Non-metallic boxes shall be hot-compressed fiberglass, one-piece, molded with reinforcing of polyester material, with a minimum wall thickness of ⅛-inch.

Finishes

Where only cast aluminum is available for certain types of fixture boxes, an epoxy finish shall be provided.

© 2023 RH2 Engineering, Inc.

16.72.3 Watertight Enclosures

[CSI 26 05 33.17]

Part 2 – Products

Manufacturers

The watertight enclosure shall be equal to Hoffman.

Materials

Watertight enclosures for vault electrical outlets shall be molded from fiberglass reinforced polyester material. A hinged cover shall be gasketed and opened with quick release latches. The conduit penetrations shall be sealed watertight.

Part 3 – Execution

Installation

An epoxy plug shall be installed in the conduit to prevent the migration of water into the conduit. The enclosure shall be NEMA rated and installed per all applicable codes.

16.75 Wiring Devices

[CSI 26 27 26]

16.75.1 Common Work for Wiring Devices

[CSI 26 27 26]

Part 3 – Execution

Installation

<u>Wiring Devices</u>

1. Position of Outlets: All outlets shall be centered with regard to building lines, furring and trim, symmetrically arranged in the room or outside the structure. Device outlets shall be set plumb and shall extend flush to the finished surface of the wall, ceiling or floor without projecting beyond the same.
2. Unless otherwise noted, wall mounted outlet devices shall generally be 24-inches above the floor, 18 inches in architecturally treated areas, above process piping near process valve boards. Switches shall be 48 inches above the finished floor unless otherwise noted.

<u>Installation of Wall Plates</u>

1. Interior Dry Locations: Install plates so that all four edges are in continuous contact with the finished wall surfaces. Plaster filled will not be permitted. Do not use oversize plates or sectional plates.
2. Exterior and/or Wet Locations: Install plates with gaskets on wiring devices in such a manner as to provide a rain tight weatherproof installation. For receptacle devices, these plates shall maintain the weatherproof rating with an attachment plug inserted and be rated extra-duty. Cover type shall match box type.

© 2023 RH2 Engineering, Inc.

Testing

After installation of receptacles, circuits shall be energized, and each receptacle tested for proper ground continuity, reversed polarity, and/or open neutral condition.

GFI receptacles shall be tested with the circuits energized. Devices shall be tested with a portable GFI receptacle tester capable of circulating 7.5 milliamperes of current, when plugged in, between the "hot" line and "ground" to produce tripping of the receptacle. Resetting and tripping shall be checked at least twice at each GFI receptacle.

Submit results of all field testing to the Engineer for review.

16.75.2 Receptacles

[CSI 26 27 19]

Part 1 – General

Design Requirements

Receptacles shall be heavy duty, high abuse, grounding type conforming to NEMA configurations, NEMA WD1 and UL 514 Standards.

Part 2 – Products

Materials

<u>Single and Duplex Receptacles</u>

1. Indoor Clean Areas: Receptacles shall be duplex, 20 amp, NEMA 5-20R, and shall accept NEMA 5-15P and 5-15P plug caps. Receptacles shall be Hubbel 5362, General Electric 4108-2, or equal. Color shall be brown in industrial areas and ivory or white in office and laboratory areas.
2. Outdoor, Process, or Corrosive Areas: Receptacles shall be duplex, 20 amp, NEMA 5-20R, and shall accept NEMA 5-15P and 5-20P plug caps. Receptacle and plug caps shall be corrosion resistant, marine duty with yellow polycarbonate weatherproof lift covers. Receptacles shall be Hubbell 53CM62/53CM21 or equal.

<u>GFI Receptacles</u>

1. Device shall be rated 20 amp, 2-pole, 3-wire, 120-volt, conforming to NEMA WD1.10 configuration. Device shall have a test and reset push buttons. GFI device shall be Hubbell 5362 or equal.

<u>Surface Multiple Outlet Assemblies</u>

1. Units shall have outlets on center-to-center spacing as shown on the Plans. Assembly shall conform to Article 353 of the NEC.

© 2023 RH2 Engineering, Inc.

16.75.3 Line Voltage Switches

[CSI 26 27 26.21]

Part 2 – Products

Manufacturers

- Sierra Electric
- Monumental Grade, Catalog No. 5721
- Daniel Woodhead 1900 series
- Or Equal

Materials

Line Voltage Types: Switches shall be rated 20 amps at 120 or 277 volts AC only. Units shall be flush mounted, self-grounding, quiet operating toggle devices. Handle color shall be brown in industrial areas and white or ivory in office or laboratory areas. Units shall conform to Federal Specifications W-S-896 D and E, UL 20, and NEMA WD1 standards.

16.75.4 HOA (Hand-Off-Auto) Lighting Switches

[CSI 26 27 26.23]

Part 2 – Products

Manufacturers

- Bryant No. 4925 or Equal

Materials

HOA Switch (Lighting): Switches shall be rated 20 amps at 120 volts AC, 3-position toggle, positive action with "center-off" maintained contact, double pole.

16.75.5 Plates

[CSI 26 27 26.31]

Part 1 – General

Design Requirements

Plates shall be of the style and color to match the wiring devices, and of the required number of gangs. Plates shall conform to NEMA WD1, UL 514, and ANSI C73. In noncorrosive indoor areas, device plates shall be made of sheet steel, zinc electroplated with chrome finish.

Device plates in corrosive or outdoor areas shall be corrosion-resistant/marine-duty type with weather protective double doors. Device plates for explosion-proof equipment shall be factory provided with the equipment.

© 2023 RH2 Engineering, Inc.

Part 2 – Products

Manufacturers

As manufactured by

- Crouse-Hinds
- Appleton
- Or Equal

Components

Device plates shall be provided with engraved laminated phenolic nameplates with ⅛-inch white characters on black background. Nameplates for switches shall identify panel and circuit number and area served. Nameplates for receptacles shall identify circuit and voltage if other than 120 volts, single-phase.

16.85 Lighting

[CSI 26 50 00]

16.85.1 Common Work for Lighting Fixtures

[CSI 26 50 05]

Part 1 – General

Design Requirements

Fixtures shall be a standard, cataloged item general description as called for on the Plans. All fixtures shall be UL approved and so labeled. Provide suitable supports and mountings.

Part 2 – Products

Manufacturers

As shown on Plans. Equals will be accepted.

16.85.2 Lamps

[CSI 26 06 50 or 26 50 06.13]

Part 1 – General

Design Requirements

Provide all lamps as specified. Refer to the Lighting Fixture Schedule on the Plans for the ordering information on lamps. Fluorescent lamps shall be standard type, not energy efficient type due to low temperature conditions. Lamps shall be new at the time of acceptance.

Lamps shall be provided for all lighting fixtures.

© 2023 RH2 Engineering, Inc.

Warranty

Lamps that fail within 90 days after acceptance by the Owner shall be replaced at no cost to the Owner.

Part 2 – Products

Manufacturers

Approved manufacturers:

- Westinghouse
- Sylvania
- G.E.

16.85.3 Fixtures

[CSI 26 06 50.16 or 26 50 06.16]

Part 1 – General

Design Requirements

Fixtures shall be of the types, wattages, and voltages shown on the Plans, comply with UL 57, and shall be UL classified and labeled for intended use. Fixtures for use in hazardous locations shall be UL listed per UL Standard 844.

16.85.4 Ballast

[CSI 26 50 06.18]

Part 1 – General

Design Requirements

Fluorescent lamp ballast shall be UL "P" rated. Ballast shall be CBM certified and bear the UL label. Ballast shall be General Electric Maxi-Miser II, Advance Mark II, or equal.

Ballasts in luminaries for exterior use shall provide reliable starting of lamps at 0 degrees Fahrenheit at 90 percent of the nominal line voltage. All locations, other than totally enclosed rooms, shall be considered exterior.

Warranty

Ballasts producing excessive noise (above 36 dB) or vibration will be rejected and shall be replaced at no expense to the Owner.

16.95 Testing

[CSI 26 08 00]

© 2023 RH2 Engineering, Inc.

16.95.1 Common Work for Testing

[CSI 26 08 05]

Part 1 – General

Submittals

Test reports shall be submitted to the Engineer prior to final acceptance in accordance with Division 1.33 of these specifications.

Scheduling and Coordination

The Contractor shall inform the Engineer in advance of testing in accordance with the requirements listed in Division 1 of these specifications.

Prior to scheduling the testing, the Contractor shall have satisfied themselves that the project area is properly cleaned up; all patching and painting deemed necessary properly completed; and all systems, equipment and controls are functioning as intended.

Part 2 – Products

Source Quality Control

Submit reports of factory tests and adjustments performed by equipment manufacturers to the Engineer prior to field testing and adjustment of equipment. These reports shall identify the equipment and show dates, results of test, measured values and final adjustment settings. Provide factory tests and adjustments for equipment where factory tests are specified in the equipment specifications. The Engineer may inspect the fabricated equipment at the factory before shipment to job site. Provide the Engineer with sufficient prior notice so that an inspection can be arranged at the factory.

Part 3 – Execution

Site Testing

Test all circuits for continuity, freedom from ground, and proper operation during progress of the work.

Insulation Resistance, Continuity, and Rotation: Perform routine insulation resistance, continuity and rotation tests for all distribution and utilization equipment prior and in addition to tests performed by the testing laboratory specified herein.

Electric Motors: Perform voltage, current and resistance tests on all motors ½ horsepower and larger installed this project. Insulation resistance readings shall be taken with a 500-volt megger for 30 seconds with the circuit conductors connected to the motor. Verify that an overload condition does not exist.

Conduct special test as required for service and/or system ground.

© 2023 RH2 Engineering, Inc.

Field Quality Control

General

1. Conduct final test in the presence of Owner and/or their authorized representative. Contractor shall provide all testing instrumentation and labor required to demonstrate satisfactory operation of systems, equipment and controls.

Operational Tests

1. Operational test all circuits to demonstrate that the circuits and equipment have been properly installed, adjusted and are ready for full-time service. Demonstrate the proper functioning of circuits in all modes of operation, and including alarm conditions, and demonstrate satisfactory interfacing with the data acquisition and alarm systems.

© 2023 RH2 Engineering, Inc.

16.95.3 Conductor Test Report

[CSI 26 08 13]

Conductor Test Report Page 1 of 1														
PROJECT:									OWNER:					
Contractor Co. Name: Tested by:									Phone Number: Test Date:					
Race-way	V	C	Operating Load Voltage						Insulation Resistance - OHMS					
Label (1)	(2)	(3)	VAB	VCB	VCA	VAN	VBN	VCN	A-B	B-C	C-A	A-G	B-G	C-G
A														
B														
C														
D														
E														
F														
G														

1. Refer to raceway and wire schedule and one-line diagram for description of feeder identified by label shown on this report
2. Visual Inspection – Check when completed
3. Continuity Test – Check when completed

© 2023 RH2 Engineering, Inc.

16.95.4 Ground Electrode Resistance Test Report

[CSI 26 08 15]

Ground Electrode Resistance Test Report	
PROJECT:	OWNER:
Contractor Co. Name: **Tested by**:	Phone Number: Test Date:
Test Meter Type: **Test Distance-D**: **Soil Conditions**: **Measured Resistance**:	
DESCRIPTION OF TEST PROCEDURE, CONDITIONS, RESULTS:	

© 2023 RH2 Engineering, Inc.

17.00 GENERAL

This division covers all work necessary for furnishing, installing, adjusting, testing, documenting, and starting-up the Instrumentation and Control (I&C) and Telemetry System. Programmable logic controller (PLC) shall provide local, automatic control of on-site pumps and control valves. Computer-based telemetry system will provide remote control, alarm presentation, and data logging activities at the Owner's headquarters location.

Sections in these specifications titled "*Common Work for . . .*" shall apply to all following related subsections whether directly referenced or not.

These specifications are an integral part of the contract documents for the I&C and Telemetry portion of this contract. The written descriptions of system performance contained herein are given to assist the Contractor in interpreting the contract plans but are not intended to be all-inclusive. The Contractor shall be aware that all automatic control systems do not require the same components and accessories for complete system operation. Therefore, these specifications do not include all accessories and appurtenances required for a complete system. The Contractor shall, however, provide all accessories and appurtenances to result in a completely operational system as required to meet the functional requirements of these documents. Where specific equipment specifications are given, they are used to represent the level of quality required by these documents.

17.05 Common Work for Automatic Control

[CSI 40 60 05]

Part 1 – General

Summary

The work under this division covers construction specifically described in these specifications. Project Plans will be provided for this project. All work incidental and necessary to the completion of the project described herein shall be completed under the bid item listed in the bid proposal, and no other compensation will be allowed. The work generally consists of the following:

- Detailed system layout and design for the particular equipment bid in accordance with these functional specifications.
- Furnishing of I&C equipment including delivery, storage, software, programming, installation, testing, startup, and documentation.
- Providing operator maintenance manuals for all equipment and devices provided by this Contract.
- Providing system training to the operators of the proposed equipment.

© 2023 RH2 Engineering, Inc.

Related Sections

- Division 16 Electrical

References

The project Plans are based on Instrument Society of America (ISA) standards numbers S5.1, S5.2, S5.3, and S5.4. The Contractor is encouraged to be familiar with these standards since the project plans do not contain wiring or ladder diagrams, but are based on the functional requirements of the ISA format.

All equipment and materials shall conform to the latest revised editions of applicable standards published by the following organizations:

- American National Standards Institute (ANSI).
- Institute of Electrical and Electronic Engineers (IEEE).
- National Electrical Manufacturers Association (NEMA).
- Underwriters' Laboratories (U/L).
- Instrument Society of America (ISA)

All equipment and materials, and the design, construction, installation, and application thereof shall comply with all applicable provisions of the National Electrical Code (NEC), the Occupational Safety and Health Act (OSHA), and any applicable Federal, State, and local ordinances, rules and regulations. All materials and equipment specified herein shall be within the scope of Underwriter's Laboratory (UL) examination services, be approved by the UL for the purpose for which they are used and shall bear the UL label.

All control panels shall bear a label by UL or by an approved testing authority for the completed assembled panel.

Definitions

Contractor: The Contractor, as distinct from the Control System Integrator, shall install panels and other materials furnished by the Control System Integrator and provide all materials and work necessary and thereby, satisfy all requirements that are within the scope of this section.

Control System Integrator: A single company subcontracted by the Contractor, who shall design and furnish the system, provide the instrument panels; provide the ventilation control panel, startup, training services, and other instrument components.

Control System Programmer: A single firm, pre-selected and contracted by the owner, who shall furnish all programming, startup and training services related to programming. The Control System Programmer shall be RH2 Engineering, Inc.

Submittals

All submittals shall be complete, neat, orderly and indexed. Partial submittals will not be accepted. Submittal information shall be provided to the Owner for the following items:

© 2023 RH2 Engineering, Inc.

- Control Panel Modification Components
- Ventilation Control Panel
- Caustic Soda Filling Station High Level Alarm Panel
- Liquid Level Switch
- Radar Level Transmitter
- Pressure Switch
- Pressure Transmitter
- Level Float
- Wall Mounted Cooling Thermostat
- Photoelectric Smoke Detector
- Intrusion Alarm Switch
- Operator in Trouble (Panic) Alarm Button
- Operation and Maintenance Manuals per Division 1.79.2 and Division 17.94
- Full size nameplate wording schedules, in lettering style proposed for use.

In addition to the requirements of Division 1.33, the Contractor shall develop and submit the following information provided by the Control System Integrator.

Hardware Submittals

Before any components are fabricated, and/or integrated into assemblies, or shipped to the site, the Contractor shall prepare a complete hardware submittal. The Engineer shall require five (5) sets, including fully detailed shop drawing, catalog cuts, wiring connections, and such other descriptive matter and documentation as may be required to fully describe the equipment and to demonstrate its conformity to these Specifications. The decision of the Engineer, upon the acceptability of any submittal, shall be final. Catalog information shall be submitted for all components and equipment, regardless of whether or not it is of the same manufacture as that listed in the Specifications.

System Plan Submittals

Following approval of the hardware submittal, the Control System Integrator shall prepare complete system interconnect wiring diagrams and panel layout plans for approval.

Plans

The Control System Integrator shall develop all shop drawings required for design, fabrication, assembly and installation of the control system. Shop drawings shall include all plans required in manufacture of specialized components and for assembly and installation of them.

Plans shall be prepared with a CAD program capable of exporting to AutoCAD format, and printed on 11-inch by 17-inch media. Plans shall have borders and title blocks identifying the project system, revisions to the plans, and type of plan. Each revision of a plan shall carry a

© 2023 RH2 Engineering, Inc.

date and brief description of the revisions. Diagrams shall carry a date and brief description of the revisions. Diagrams shall carry a uniform and coordinated set of wire numbers and terminal block numbers in compliance with panel work wiring. Additionally, one set of electronic .DWG files shall be provided to the Owner.

Elementary Diagrams

The Contractor shall provide elementary diagrams for all discrete loops. Loop diagrams shall be prepared in compliance with ISA S5.4 and shall be provided for all analog loops. Elementary diagrams and loop diagrams shall show circuits and devices of a system. These diagrams shall be arranged to emphasize device elements and their functions as an aid to understanding the operation of a system and maintaining or troubleshooting that system. Elementary and loop diagrams shall also show wire numbers, wire color codes, signal polarities, and terminal block numbers.

Panel Fabrication and Arrangements Plans

The Contractor shall provide arrangement plans of all panel front- and internal-mounted instruments, switches, devices, and equipment indicated. All panel mounting details shall be shown. Outer dimensions of all panels shall be included on the plan. Deviations from approved arrangements require approval prior to installation.

Arrangement plans shall be drawn to scale using standard Architectural or Engineering scales.

Site Conditions

Specified instrumentation and control equipment shall be modified, if necessary, to make it suitable for operation in the ambient conditions specified in Division 16.

Warranty

In addition to any other warranties required by the specifications, the entire PLC system will be warranted against defects in materials, workmanship, and software functions for a period of one (1) calendar year following the successful completion of the Functional Acceptance Test (FAT). The Contractor or designated service organization will be available on 24-hour notice to correct any system problems without charge to the Owner during the warranty period. In addition, the Contractor will provide four 2-day site visits during the warranty period to perform inspection and calibration of the equipment or other work at the request of the Owner.

Extra Materials

The Contractor shall supply sufficient spare parts, components, and assemblies to replace *any* defective or malfunctioning control component provided in this system. Control components are considered any device or combination of devices without which normal automatic control as outlined in this specification cannot be accomplished, and includes:

1. Two (2) spares of each part, component, or assembly, if more than ten (10) of those components are normally in use in the system.
2. One (1) box of each fuse type provided on this project. If ten (10) or more of a fuse type is provided for the project, then two (2) spare boxes shall be provided.

© 2023 RH2 Engineering, Inc.

3. One (1) spare circuit breaker of each rating type provided on this project.
4. One (1) spare relay of each rating type provided on this project.

Spare part components shall be packaged for at ease of field installation by non-trained personnel, so that no soldering or special skills are required for installation. All spare parts shall be delivered in a hinged plastic box that is purposefully made for this contract. The box shall have a parts list permanently attached to the inside lid which lists all parts and refers to them by numbered code visible on the outside of the package. Fragile components shall be adequately protected with cut foam. Electronic components shall be wrapped in ultra-violet inhibiting file. The exterior of the box shall be labeled "Telemetry Spare Parts – Water Department." Provide the box with lifting handles.

Part 2 – Products

Components

These Specifications list major instruments required to provide the process instrumentation system. All instrument functions specified on this list shall be provided by the Control System Integrator. Any additional instruments required to complete the instrument loops because of certain characteristics of the particular equipment selected by the Control System Integrator shall be provided. Such additional instruments shall be provided and included in the original contract price even though not specified in the instrument index or on the Plans.

The following systems utilize automatic control:

- Pump controls
- Valve controls
- Engine generator set controls
- Ventilator controls

Accessories

Provide all accessories required to furnish a complete control system that meets the requirements of the Plans and Specifications.

Source Quality Control

Material shall be new, free from defects, and of the quality specified. All equipment and materials utilized in the system shall be the products of Manufacturers with at least five (5) years of experience in the manufacture of similar equipment. Similar items in the system shall be the products of the same Manufacturer. All equipment shall be of industrial grade and of standard construction, shall be capable of long, reliable, trouble-free service, and shall be specifically intended for control and monitoring of operation of motor-driven pumps and equipment. All equipment shall be of modular design to facilitate interchangeability of parts and to assure ease of servicing.

© 2023 RH2 Engineering, Inc.

Part 3 – Execution

Installers

Installation shall be performed by the workers who are skilled and experienced in the installation of I&C and Telemetry systems.

Installation

Installation and testing procedures shall be as specified in these and subsequent sections of this division.

The control system shall be installed in accordance with the installation plans and instructions prepared by the Control System Integrator.

Installation shall include all elements and components of control system and all conduit and interconnecting wiring between all elements, components, sensors, and valve operators.

Equipment shall be located so that it is readily accessible for operation and maintenance.

Field Equipment

Equipment shall be provided as specified on the Plans such that ports and adjustments are accessible for in-place testing and calibration. Where possible, equipment shall be located between 48 inches and 60 inches, unless specified otherwise on the Plans, above the floor or a permanent work platform. Instrumentation equipment shall be mounted for unobstructed access, but mounting shall not obstruct walkways. Equipment shall be mounted where shock or vibration will not impair its operation. Support systems shall not be attached to handrails, process piping or mechanical equipment except for measuring elements and valve positioners. Instruments and cabinets supported directly by concrete or concrete block walls shall be spaced out not less than ⅝-inch by framing channel between instrument and wall.

Steel used for support of equipment shall be hot-dip galvanized after fabrication. Support systems including panels shall be designed in accordance with the Seismic Restraint and Anchorage section of Division 1.81 of these specifications and to prevent deformation greater than ⅛-inch under the attached equipment load and an external load of 200 pounds in any direction.

Electrical Power Connection

Electric power wiring and equipment shall be in compliance with Division 16. Power disconnect switches shall be provided within sight of equipment and shall be labeled to indicate opened and closed positions and specific equipment served. "Within sight of" is defined as having a clear unobstructed view from the equipment served and within 50 feet of the equipment served. Disconnect switches shall be mounted between 36 inches and 72 inches above the floor or permanent work platform. Where equipment location is such that the above requirements cannot be met by a single disconnect switch, two switches, one at the equipment and one at the work platform, shall be provided.

Signal Connection

Electrical signal connections to equipment shall be made on terminal blocks or by locking plug and receptacle assemblies. Jacketed flexible conduit shall be used between equipment and rigid raceway systems except that flexible cable assemblies may be used where plug and receptacle

© 2023 RH2 Engineering, Inc.

assemblies are provided and the installation is not subject to mechanical damage in normal use. The length of flexible conduit or cord assemblies shall not exceed 2 feet. Flexible cable, receptacle and plug assemblies shall be used only where specified.

17.06 Control System Integrator

[CSI 40 61 13]

Part 1 – General

Division of Responsibility

All instrumentation and industrial electronic systems shall be provided under the supervision of a single Control System Integrator, chosen by the Contractor, which is regularly engaged in the design and installation of such systems of similar scope and complexity. The Control Systems Integrator shall be enjoined by the Contractor as a Subcontractor. The assignment of specific responsibilities herein to the Control System Integrator shall not, in any way and under any conditions, diminish the Contractor's full and complete responsibility for all work performed and all materials installed under the contract. The contract between the Contractor and the Control System Integrator shall specifically require that the Control System Integrator conform to and meet all requirements specified in the contract documents.

The assignment of a Control System Integrator that is an equipment supplier shall not be acceptable.

<u>Control System Integrator's Responsibility</u>

The Control System Integrator shall be solely and completely responsible for the final design and assembly of the entire control system. Responsibilities include:

- Provision of, and the detailed design of, custom control panels and the motor control center. The plans show general layout of the control panels. The Integrator shall provide detailed scaled design of all components on and in the control panels and determine specific requirements.
- The design of all interconnecting wiring of control equipment including remote control panels, packaged equipment panels, mechanical equipment with control components, etc.
- Testing of the control panels in the Control System Integrator's shop.
- Coordinate with the Contractor for specific requirements and locations of raceway penetrations and field wiring in control panels.
- The Control System Integrator shall supply the Contractor with all necessary detailed installation plans and/or written instruction for installation of all control components and sensing devices for proper system operation.
- Coordinate with the Control System Programmer who has been selected by the Owner and are under separate contract with the Owner, to allow in-shop testing of the programming of all control devices and to execute the functions listed in the control strategies.

© 2023 RH2 Engineering, Inc.

- Develop an assembly and testing schedule, with the Control System Programmer to allow for testing of all new programs in the Control System Integrator's shop.
- Provide installation assistance.
- Provide Startup and Training Services.

General and Electrical Contractor's Responsibilities

The General and Electrical Contractor shall be responsible for the following equipment and services:

- Review of the Control System Integrator's submittals and wiring diagrams for coordination with space requirements, raceway requirements of field wiring, etc.
- Supply the Integrator with submittals of equipment related to the control system that the Integrator must include in their submittals and integrate. Such as motors, packaged control panels that the Integrator does not build, etc.
- Installation of the control panels provided by the Control System Integrator.
- Installation of the interconnecting wiring in accordance with these documents and the Control System Integrators wiring diagrams.
- Installation of I&C and Telemetry System components in accordance with these documents and plans or instructions of the Control System Integrator.

Part 3 – Execution

Installers

The Control System shall be designed, constructed, programmed and commissioned by full time employees with a minimum of 5 years of experience (minimum of 1 year with Integrator).

Integrators List

The Control System Integrator shall be selected by the Contractor from the following acceptable companies (Alphabetical Listing):

- L2 Systems LLC – Everett, Washington
    - Process Solutions, Inc. – Stanwood, Washington
    - Quality Control Corporation (QCC) – Lynnwood, Washington
    - S&B Inc. (Stead & Associates) – Bellevue, Washington
    - Systems Interface Inc. – Mukilteo, Washington
    - Taurus Power and Controls, Inc. – Kent, Washington
    - Technical Systems, Inc. – Lynnwood, Washington

Alternative Integrators

Alternate Control System Integrators not listed above shall be considered for acceptability by the Owner based on following qualifications:

© 2023 RH2 Engineering, Inc.

1. The Control System Integrator shall be an instrument and control system manufacturing company.
2. The Control System Integrator's manufacturing and assembly facility shall be located within a 100-mile drive from Bonney Lake.
3. The Control System Integrator shall be specialized in the design, assembly, testing, installation and service of municipal water and wastewater control and communication systems in the Pacific Northwest for at least five years.
4. The Control System Integrator shall employ technicians and engineers with documented experience in the design, assembly, testing, installation, operation, calibration, trouble-shooting, service and repair of control, and communication systems for municipal water and wastewater utilities.
5. The Control System Integrator shall have completed the design, assembly, testing and installation of control systems that include the instruments and devices cited on the Plans by specific manufacturer's name.

An alternate Control System Integrator selected by the Contractor shall be subject to the approval by the Owner. Prior to placement of purchase orders for services and equipment, the Contractor shall provide the following information about the selected alternate Control System Integrator for review by the Owner:

1. Description of ownership and organization of Integrator.
2. Resumes of principals and/or key employees who will be working directly in the engineering, assembly, testing and commissioning of the system for this project.
3. Description of expertise in design, assembly, testing and installation of control systems for municipal utility facilities.
4. Description of municipal control systems designed, assembled and installed in the last 5 years. Description shall include:
    - Names of employees involved in each system.
    - Detailed description and plans of each system.
    - Cost of each system.
    - Names and telephone numbers of persons involved in operation and maintenance of each system.
    - Description of the service capabilities normally provided by the company including resumes of employees assigned to field service and listing of service equipment.
    - Additional information that may assist the Owner in ascertaining the company's general ability to perform the work. The acceptability of the Integrator will be determined solely by the Owner.

<u>Approval of Personnel and Alternatives</u>

The Contractor and the selected Control System Integrator shall anticipate that the Owner may withhold approval of the selected Integrator or employee if, in the opinion of the Owner,

© 2023 RH2 Engineering, Inc.

the Control System Integrator or employee does not have the experience, capability or an acceptable performance and execution record of similar projects in the past.

Neither the Contractor or Control System Integrator or employee not approved by the Owner, shall be entitled to an extension of time or to any claim for damages because of extra and unanticipated costs, hindrances, delays or complications caused by or resulting from the Owner not approving any Control System Integrator or employee for whatever reason.

17.07 Control System Programmer (Control System Programmer Contracted Directly by Owner)

[CSI 40 68 66]

Part 1 – General

Division of Responsibility

The Control System Programmer shall be selected and Contracted for the control system programming by the Owner. The Control System Programmer Contracted by the Owner is RH2 Engineering, Inc., who may be contacted at (425) 951-5358. It is the responsibility of the Control System Programmer to provide PLC programming that will accomplish control of the proposed and modified systems as described in the Specifications and Plans.

Control System Programmer's Responsibility:

The Control System Programmer Responsibilities include:

- Develop a testing schedule to allow for testing of all new telemetry panel programs.
- Notify the Control System Integrator of all components needed to test equipment panels.
- Software testing of the control panels in the Control System Integrator's shop.
- Programming of the PLC, operator interface, and HMI Computer System.
- Provide required software startup, troubleshooting, and commissioning services needed to complete implementation of programs.

17.08 System Description

[CSI 40 61 96]

Part 1 – General

Summary

The I&C and Telemetry system functions required are specified on the Plans and in subsequent sections of this Division.

Design and Performance Requirements

The system shall be designed to provide the control capabilities and functions indicated and implied by the Plans and these Specifications and to provide trouble-free operation with

© 2023 RH2 Engineering, Inc.

minimum maintenance. The system shall readily enable manual operation of any and all functions in the event of failure of any one component.

The control system shall be designed and assembled by the Control System Integrator to provide:

- Control of motor driven pumps, equipment, and processes.
- Monitoring of operation of motor driven pumps, equipment, and processes.
- Indication of operating status of motor driven pumps, equipment, and processes.
- Monitoring and indication of pressures, temperatures, levels, and flows, as indicated and implied by the Plans and Specifications.
- The capabilities indicated and implied by the Plans and Specifications.

The I&C and Telemetry System shall be designed and assembled by the Control System Integrator to be an integrated system composed completely of components which are specifically designed and used for and in conjunction with control and operation of motor-driven pumps and process control equipment. The Control System Integrator shall supply all interfacing equipment, appurtenances and accessories and all such devices that may be required for proper interfacing as part of the control system.

Part 2 – Products

Manufacturers

The telemetry components of the RTU shall be manufactured by Allen-Bradley to be consistent with the Owner's existing system.

Components

The I&C and Telemetry System shall include the instruments, control devices, Remote Telemetry Unit, Human Machine Interface, input and output devices, sensors, interfacing devices, cabinets, enclosures and other components indicated and implied by the Plans and Specifications.

The following is a list of the RTUs, Control Panels, Pressure and Level Assemblies to be provided by the Control System Integrator:

- Pump Station Discharge Pressure Assembly
- Pump Discharge Pressure Switch Assembly (typical of 2)
- Ventilation Control Panel
- Caustic Soda Filling Station High Level Alarm Panel

Part 3 – Execution

Preparation

The Control System Integrator shall be responsible for the coordination and integration of control system with the motor control and other related equipment. The Control System Integrator shall communicate directly with the Manufacturer(s) and Supplier(s) of all related

© 2023 RH2 Engineering, Inc.

equipment to determine all details of the equipment, which may influence or affect the control system. The Control System Integrator shall determine all requirements for and shall cause integration of the control system into a unified operating system. The Control System Integrator shall define all requirements for all interfacing equipment and shall supply all appurtenances, accessories and all such devices, which may be required for proper interfacing as part of the control system.

The Control System Integrator shall be responsible to obtain submittal information on equipment supplied by other disciplines and to integrate them into the control system to form a complete working package as outlined by the contract documents.

Installation

The system shall be completely assembled in the shop by the Control System Integrator. All components and equipment shall be prewired to the maximum extent possible.

All Process Control shall be done within the control panels unless specifically listed on the Plans as other.

17.10 PANELS

[CSI 40 67 00]

17.12 Equipment Panels

[CSI 40 67 16, 40 67 19]

Part 1 – General

Related Sections

Division 10.14.23 Panel Signage. All panels shall be labeled.

References

Panels shall meet the requirements of UL-508 for water systems and UL-913 for sewer systems. All panels shall bear the appropriate label. The provider of the panels shall be a UL-508A certified facility. All field modifications shall be in conformance with UL-508 or UL-913.

Design Requirements

Control equipment panels shall be enclosures conforming to the requirements of the National Electrical Manufacturers Association (NEMA) and shall be NEMA 12 for indoor use and NEMA 4X for outdoor use.

Part 2 – Products

Components

- Enclosure shall be constructed of steel.
- Minimal metal thickness shall be 14-gauge.

© 2023 RH2 Engineering, Inc.

- All doors shall be rubber-gasketed with continuous hinge and key locking latch mechanism.
- Wherever practical, enclosures shall be a manufactured item.
- All doors shall be provided with quick-release latches to secure cover.
- Panels shall be sized to adequately dissipate heat generated by equipment mounted in or on the panel.
- Enclosure shall include a backpan.
- Enclosure shall be finished in ANSI 61 gray polyester powder coating inside and out over phosphatized surfaces.
- The enclosure shall be oversized to accommodate future racks and auxiliary devices as required.
- All outdoor enclosures shall be provided with a control panel heater and ventilation fan and filter with built-in thermostat to provide adequate climate control.

Fabrication

Panels should be completely fabricated, and instruments installed and wired in the manufacturer's factory (where possible). All wiring shall be completed and tested prior to shipment. All external connections shall be by way of numbered terminal blocks. Panel cutouts for instruments and devices shall be cut, punched or drilled and smoothly finished with rounded edges.

17.20 PANEL COMPONENTS

[CSI 40 78 00]

Part 1 – General

Design Requirements

All components shall be suitable for installation inside the I&C and Telemetry system panel enclosure.

17.20.3 Terminal Blocks

[CSI 40 78 71]

Part 1 – General

Design Requirements

Terminal blocks shall be one-piece molded plastic blocks with screw-type terminals and barriers rated for 600 volts. Terminals shall be double-sided and supplied with removable covers to prevent accidental contact with live circuits. Terminals shall have permanent, legible identification, and be clearly visible with the protective cover removed.

Fusible terminal blocks shall be provided with a LED blown fuse indicator for each terminal.

© 2023 RH2 Engineering, Inc.

Part 3 – Execution

Installation

All wires between panel-mounted equipment and other equipment shall be terminated at terminal blocks. Switches shall be terminated at the terminal blocks with crimp-type, pre-insulated, ring-tongue lugs. Lugs shall be of the appropriate size for their terminal block screws and for the number and size of the wires terminated.

17.22 Wire and Cable

[CSI 40 67 33]

17.22.2 Wiring

[CSI 40 67 33]

Part 1 – General

References

All electrical wiring shall be in accordance with the NEC.

Design Requirements

Wires shall be 600-volt class, PVC insulated, stranded copper and shall be the sizes required for the current to be carried but not less than No. 14 AWG conductor size.

Wires for signal circuits shall be twisted shielded pairs not smaller than No. 18 AWG.

Part 3 – Execution

Installation

All power wiring shall be supported on a sheet metal raceway or enclosed in a plastic wiring duct. Wiring for signal circuits shall be separated at least 6-inch from any power wiring.

17.22.3 Cables

[CSI 40 67 33]

Part 1 – General

Design Requirements

Cables and connectors shall be industry standard, shielded, and shall be provided to connect all peripherals and equipment.

17.24 Switches and Relays

[CSI 40 78 19, 40 78 53]

© 2023 RH2 Engineering, Inc.

17.24.2 Selector Switch

[CSI 40 78 19.21]

Part 2 – Products

Manufacturers

Heavy-Duty, Watertight, and Corrosion-Resistant Type: Eaton/Cutler-Hammer, Type E34; Square D Co., Type SK; Allen Bradley, Type 800H; General Electric Co., Type CR 104P.

Manufactured Units

Selector switches shall be NEMA type 4/4X/13, corrosion-resistant/watertight/oil-tight, type selector switches with contacts rated for 10 amperes continuous at proper operating voltage. Operators shall be black knob type. Units shall have the number of positions and contact arrangements and spring return function (if any) as shown on Plans. Units shall be single-hole mounting, accommodating panel thicknesses from $^{1}/_{16}$-inch minimums to ¼-inch maximum.

17.24.4 Panel Relays

[CSI 40 78 53]

Part 1 – General

Design Criteria

Relays shall be provided as necessary to perform switching functions required of control panels and other control circuits as shown on the Plans and described in the technical specifications. Appropriate relay type and associated contacts shall be selected based on the application from the control wiring diagrams or the functional description. Where timing relays and control relays require additional contacts, provide auxiliary control relays properly sized for the application.

All contacts and relays shall be NEMA rated and UL recognized.

The electrical life expectancy for the relay shall be over 500,000 operations at 120V AC, 10 amps; (over 200,000 operations at 120V AC, 10 amp for SPDT, 3PDT, and 4PDT). The mechanical life expectancy for the relay shall be over 50,000,000 operations.

Part 2 – Products

Manufacturers

<u>Control Relays</u>

Square D Class 8501, Type K or R; Allen Bradley 700 Type HA or HB; IDEC RH Series; or equal.

<u>Time Delay and Timing Relays</u>

Allen Bradley 700 Type HR; IDEC GE1, RTE or GT3 Series; or equal.

© 2023 RH2 Engineering, Inc.

Manufactured Units

Control Relays

Relays for general purpose use shall be DPDT or 3PDT, 10 amp contacts with the appropriate coil voltage for the application. Relays shall be plug-in type with matching socket. All relays shall have LED indicators to signal when the coil is energized. Relay coils shall be rated for continuous duty.

Time Delay Relays

Time delay relays shall be multi-function, multi-range with plug-in base, pin style terminations timing and timed out LED indicators, and calibrated scales. Relays shall have minimum 0.5 seconds to 60 minutes, 8 selectable timing ranges, 5 amp contacts. Select coil voltage for the application. Units shall be sealed to prevent entry of contamination in the form of dust, dirt, or moisture.

Appropriate relay shall be selected based on application from the control wiring diagrams.

Minimum accuracy (plus or minus) shall be as follows:

1. Repeat accuracy – ½ percent.
2. Timing change over full voltage range – ½ percent change over full temperature range.
3. Scale tolerance – 5-percent.

Part 3 – Execution

Installation

Provide adjustable time relays on all alarm and shut down circuits to prevent nuisance tripping of other alarm points. Time delay relays for these functions may not be shown on the Plans; however, provide as required on all circuits.

Provide additional form C contacts over and above the number indicated on the Plans for all relays provided.

120 VAC relays shall not be interchangeable with other voltages to prevent a hazardous interchange of relay voltages.

Provide DIN mounted or panel mounted type depending on application.

17.25 Indicating Lights and Readouts

[CSI 40 78 13, 40 78 16]

© 2023 RH2 Engineering, Inc.

17.25.2 Pilot Lights

[CSI 40 78 16.21]

Part 2 – Products

Manufacturers

Heavy-Duty, Watertight, and Corrosion-Resistant Type: Eaton/Cutler-Hammer, Type E34; Square D Co., Type SK; Allen Bradley, Type 800H; General Electric Co., Type CR 104P.

Manufactured Units

Indicating lights shall be NEMA type 4/4X/13, corrosion resistant, water-tight, oil-tight, full voltage, push-to-test, high visibility 28 chips LED type. Pilot lights shall be rated for the proper operating voltage. Appropriate lens caps shall be provided as shown on Plans.

17.30 INTELLIGENT CONTROL UNITS

17.31.2 Programmable Logic Controller (PLC) System

[CSI 40 63 43]

Part 1 – General

Summary

Work involved in this Contract includes modifying existing PLC programming to change the existing operation and add additional features.

Performance and Design Requirements

- The PLC system modifications shall accomplish the control requirements of the loop descriptions, Plans, and Specifications.
- The design application and installation of the PLCs shall conform to NEMA ICS 1.1.
- PLC programming shall be documented.
- All PLC control system components shall be capable of meeting or exceeding electromagnetic interference tests per ANSI/IEEE C37.90.2.

Project Conditions

The existing control panel contains a CompactLogix 1769-L24ER QBFC1B PLC that shall be modified to monitor and control equipment added to this project.

Part 3 – Execution

Installers

Control System Integrator and programmers shall have had experience in design installation and start-up of at least three similar installations using the existing hardware and existing software existing.

© 2023 RH2 Engineering, Inc.

Installation

Provide a completely integrated distributed programmable controller system capable of analog and sequential control, data acquisition and display, alarm annunciation and communications using the PLC system. I/O cards and memory shall be added as necessary to complete work shown on the Plans and described in the specifications.

The system shall provide true distributed control wherein each PLC is an intelligent stand-alone controller programmed for the specific functions required at its respective location. Certain information in the form of control commands, interlocks and data will be passed directly between the PLCs for use in executing the local control programs.

Input/Output Connection Requirements

1. Make connections to I/O subsystem by terminating all field wiring on terminal blocks within the I/O enclosure.
2. Prewire I/O modules to terminal blocks.
3. Provide terminal blocks with continuous marking strip.
4. Size terminals to accommodate all active data base points and spares.
5. Provide terminals for individual termination of each signal shield.
6. Field wiring shall not be disturbed when removing or replacing an I/O module.

PLC Installment

1. Component placement:
    a. Mount all components according to manufacturer's instructions.
    b. Locate incoming line devices (isolation or constant voltage transformers, local power disconnects, surge suppressors, etc.) so as to keep power wire runs within an enclosure as short as possible.
    c. If items such as magnetic starters, contactors, relays and other electromagnetic devices are located within the same enclosure as the PLC system components, provide at least 6 inches of separation between the magnetic area and the control area.
    d. Oversize enclosure to accommodate future racks and auxiliary devices as required.
2. Provide enclosure with a single quick disconnect of incoming power. Mount disconnect switch or breaker on enclosure exterior and label.
3. Enclosures shall comply with these specifications.
4. Enclosures shall be equipped with H2S inhibitor(s) suitable for the enclosed volume.

© 2023 RH2 Engineering, Inc.

17.33 Network Equipment and Computers

17.33.1 Industrial Network Equipment

[CSI 40 66 13]

Part 1 – General

Design Requirements

All specified "industrial network equipment" shall comply with the following minimum specifications:

1. Rated for a 5-30VDC power supply.
2. UL listed.
3. Designed for an industrial environment.
4. Operating temperature of -40 degrees Fahrenheit to 176 degrees Fahrenheit.
5. IP66 rated water and dust resistant.
6. Control network device shall be capable of remote monitoring using OPC protocol.
7. All devices on fiber backbone shall have a minimum of two sets of transmit/receive ports.
8. Twisted pair network speed shall be a minimum of 100Base-TX.
9. Fiber optic network speed shall be a minimum of 100Base-FX.

These requirements do not apply to non-industrial network equipment.

Part 2 – Products

Control Network Equipment

Data highway communications shall be accomplished on a control network consisting of nodes, one at each PLC or computer workstation and a physical link layer consisting of cables and all interfacing hardware. Control Network equipment shall consist of the following devices.

<u>Unmanaged Ethernet/Fiber Switch</u>

One (1) N-Tron 710FX2-ST Ethernet Switch with ST style fiber optic ports, or equal.

Part 3 – Execution

Installation

All network equipment in Control Panels shall be installed as per Plans, specifications and product installation instructions. All components shall be suitable for installation in the environment where installed. All devices shall be installed as specified by the manufacturer. All devices shall be installed to be field serviceable without taking the facility out of service. Device displays shall be positioned to be easily read when viewing directly into control panels.

© 2023 RH2 Engineering, Inc.

17.50 SENSORS AND CONTROLS

[CSI 40 70 00]

17.50.1 Common Work for Sensors and Controls

[CSI 40 70 05]

Part 1 – General

Design Requirements

Provide sensors and controls scaled and rated for their intended application.

Part 3 – Execution

Installation

All devices shall be installed to be field serviceable without taking the facility out of service. Readouts shall be positioned to be easily read from a standing position, central to the room unless allowed otherwise by the Engineer.

17.51 Emergency Sensors and Controls

17.51.2 Smoke Detectors

[CSI 28 46 11]

Part 1 – General

Design Requirements

Provide all components suitable for installation in the environment where installed. Detector shall be provided complete with sensing head and mounting base.

The photoelectric smoke detector shall be 24-volt powered with a local audible alarm and Form C contacts for remote annunciation through two-wire connection to telemetry panel. The voltage requirement is dependent of the power source available at the telemetry panel. The detector shall detect both smoke particles and heat. The detectors shall have a latching alarm feature that resets only by a momentary power interruption.

Part 2 – Products

Manufacturers

The smoke detector shall be a System Sensor 4WTAR-B, or equal.

Part 3 – Execution

Examination

The Contractor shall verify power supply before selecting the appropriate model.

© 2023 RH2 Engineering, Inc.

Site Testing

Test each smoke detector with artificial smoke in a can per manufacturer's instructions. Test the thermal sensing units with a heat gun or blow dryer per manufacturer's instructions.

Other testing methods will only be acceptable if approved by the manufacturer. Each failed smoke detector shall be replaced.

17.51.4 Intrusion Alarm Switch

[CSI 28 31 11.23]

Part 1 – General

Design Requirements

The switch shall be two-pole side plunger type switch with one normally open and one normally closed set of contacts. The switch shall be a Type C and NEMA rated.

Part 2 – Products

Manufacturers

Intrusion switches shall be as specified on the Plans, or equal.

Components

Provide with a standard box plug-in and connecting cable of significant length to reach a junction box located near the switch.

Part 3 – Execution

Installation

The Contractor shall install intrusion alarm switches on all entrance doors and access hatches as shown on the Plans. All components shall be suitable for installation in the environment where installed.

Mount the switch as shown on the Plans to detect the opening of each entrance door and access hatch identified on the Plans. Connect to the normally open contacts so that the switch is closed when the door is closed and open when the door is open. A factory provided cord shall be of significant length to reach from the device to a junction box.

17.51.5 Operator in Trouble (Panic) Alarm Button

[CSI 40 78 19.25]

Part 2 – Products

Manufacturers

Allen-Bradley, Eaton, Siemens, Square-D, or equal.

Materials

The pushbutton shall be heavy duty, oil-tight, push-pull mushroom type with contacts rated for 10 amps continuous at 24 VDC. Button color shall be red. Each pushbutton shall be

© 2023 RH2 Engineering, Inc.

furnished with a permanently mounted "Operator in Trouble – Push to Alarm" sign above the button. A junction box shall be provided for mounting.

Part 3 – Execution

Installation

The contractor shall install operator in trouble alarm buttons as shown on the Plans. Unless otherwise noted, mount device 48 inches above the floor. The alarm button when pushed shall transmit a signal into the telemetry for remote and local enunciation of an alarm condition. Each alarm button shall be wired in series to the input point at the telemetry panel.

17.52 Pressure and Level Sensors and Controls

[CSI 40 72 00, 40 73 00]

17.52.2 Flood Liquid Level Switches

[CSI 40 72 83]

Design Requirements

The switch shall be SPST rated for 20VA. The float shall be constructed on Buna-N material and the stem shall be constructed from brass.

Part 2 – Products

Manufacturers

Switches shall be Omega, LVN-20 or equal.

Part 3 – Execution

Installation

The contractor shall install a liquid level switch as shown on the Plans. Mount the switch to the end of ½-inch PVC Coated GRS or galvanized pipe, depending on the area classification. Provide threaded busing as necessary to provide a complete assembly. Secure pipe to wall with a minimum of two galvanized conduit hangers. Mount the liquid level assembly ½-inch above the finished floor.

17.52.4 Clean Water Level Float Switches

[CSI 40 72 76.15]

Part 2 – Products

Manufacturers

The float switch shall be an NSF Standard 61 rated Model SJE MilliAmpMaster Float as manufactured by SJE Rhombus, or equal.

Manufactured Units

Float switch body shall be constructed of high impact, corrosion resistant, polypropylene housing measuring not less than 2¾-inch in diameter. A long life, high reliability, potted SPST

© 2023 RH2 Engineering, Inc.

magnetic reed switch rated for not less than 100 VA at up to 250 Volts shall be mounted inside the float and connected to a multi-stranded, two (2) conductors plus ground, 18 gauge, CPE jacketed cable. The cord shall have fine strand conductors (Not more than 34 Gauge) made especially for heavy flexing service. The cable connection point shall be potted in epoxy providing a strong bond to the float and reed switch forming a water/moisture tight connection.

Part 3 – Execution

Installation

Level switches shall be normally closed type and provided for the following:

- Overflow level sensing

The Contractor shall provide a high level backup float. A flexible Neoprene sleeve, not less than ⅛-inch thick, shall be provided over the CPE jacketed cable extending not less than 5 inches from the top of the mounting bracket extending down through the cable mounting bracket hinge point to the top of the float switch body, providing cable stress point relief and extended operational life.

17.52.5 Pressure Switches

[CSI 40 73 36]

Part 1 – General

Design Requirements

Provide pressure switches that are surface mount type with ¼-inch or ½-inch NPT bottom fittings (or as shown on the plans if different) and completely suitable for operation when connected to potable water pipeline. All wetted parts shall be brass or stainless steel; no aluminum will be allowed. Provide unit with clear Lexan cover over trip settings that are screwdriver adjustable and displayed in psi. Housings shall be NEMA 4 rated with waterproof conduit connections.

Select switches to provide suitable over-pressure protection for specific pressure range involved at each location. Sensors shall be seamless brass or stainless steel. Setpoints shown are estimates and may require adjustment at startup.

Location	Scale Range	High Setpoint	Low Setpoint	Run Setpoint
Pump #1 and 2 Discharge	0-300 psi	250 psi	180 psi	210 psi

Part 2 – Products

Manufacturers

United Electric 400 series, or equal.

© 2023 RH2 Engineering, Inc.

Part 3 – Execution

Installation

Install switches as shown on the Plans. If not shown, securely install and mount in a location approved by the Owner.

17.52.10 Gauge Pressure Transmitter

[CSI 40 73 26]

Part 1 – General

Design Requirements

Provide transmitter with ¼-inch or ½-inch process connections or as shown on the plans if different, and completely suitable for measuring pressure in potable water pipeline. Select ranges to provide a system that utilizes the largest percentage of available span for each transmitter. Transmitter shall transmit in pounds per square inch displayed at the device screen and through the 4-20mA output.

Location	Low end of range	High end of range (minimum)	High end of range (maximum)
Discharge pressure	180 psi	220 psi	300 psi

Part 2 – Products

Manufacturers

Pressure transmitter shall be Foxboro IGP10, Endress+Hauser Cerabar S PMP71B, Siemens Sitrans P DS III, or equal.

Manufactured Units

Pressure transmitters shall be all solid state with a 4-20ma output. All wetted parts shall be stainless steel. Transmitter shall be hermetically sealed to withstand submergence or an operating environment of 100 percent humidity for an indefinite period of time. Total error band shall not exceed 0.25 percent of full scale over a temperature range of 0-100 degrees Celsius. Voltage input shall be 9 to 20 VDC without more than a 0.12 percent change in output. Volumetric displacement of bridge from 0 psi to max-rated pressure shall be less than 0.01 cubic inches. Provide electronics with built-in protection against AC line transients and lightning spikes, and an R/F filter to reject external electrical and internal noise. Zero and span adjustments shall be non-interacting.

A digital indicator with on-board pushbuttons shall be provided to display the measurement with a choice of units. The pushbuttons shall allow zero and span adjustments and local configuration without the need for a hand-held terminal.

© 2023 RH2 Engineering, Inc.

Part 3 – Execution

Installation

Transmitter installations shall be equipped with drain and bleed and isolation valves to remove air from transmitter diaphragm. Contractor shall be completely responsible for proper operation and interface of transmitter with other electronics provided on the project.

17.52.14 Radar Level Transmitter

[CSI 40 72 13]

Part 1 – General

Design Requirements

The radar level transmitter shall be a 2-wire, 26 GHz pulse capable for continuous monitoring of liquids and slurries in storage vessels with nominal pressure and temperature, with a range of 0 feet to 10 feet. The unit shall be capable of operating in -40 to +176 degrees F ambient conditions. Performance accuracy shall be 0.1% of the measurement range of the unit.

The level transmitter shall be 24 VDC nominal loop-powered; and transmit a 4-20 mA analog signal. The transmitter shall have an integral graphical alphanumeric display for setup and calibration of the unit. If a separate handheld unit is required for programming of the unit, it shall be included and provided to the Owner.

The level transmitter shall be listed for the environment in which it is installed and be rated Type 4X/ Type 6 and IP 68. The rod antenna shall be of uni-construction propylene assembly with an integrated 80mm shield to eliminate vessel nozzle interference.

Radar level sensor and transmitter shall have an operating range as required for the installation shown on the Plans and shall be completely encapsulated in a corrosion resistant housing. The level sensor and transmitter shall provide a 4-20 mA signal proportional to the level reading. The level sensor and transmitter shall have an accuracy of 0.25 percent. The complete level transmitter assembly shall be completely rated for the environment for which it will be installed. The level sensor shall be equipped with a submergence shield. Integral level sensor cables shall be long enough to reach the termination locations as shown on the Plans. The transmitter shall be 24 VDC powered.

Part 2 – Products

Manufacturers

The radar level transmitter assembly shall be an Endress Hauser Micropilot FMR20, no substitutions, mounted as shown on the Plans.

Part 3 – Execution

Installation

Furnish and install radar level transmitter as shown on the Plans and according to manufacturer's recommendations and requirements.

© 2023 RH2 Engineering, Inc.

17.53 Environmental Sensors and Controls

17.53.2 Wall-Mounted Cooling Thermostat

[CSI 23 09 13.13]

Part 1 – General

Related Sections

- Division 11.95.34 Fans

Design Requirements

All components shall be suitable for installation in the environment where installed. The thermostat shall be a snap action, SPDT line voltage air switch controller rated for a 16-amp inductive load at 120 VAC.

Part 2 – Products

Manufacturer

The Wall-Mounted Cooling Thermostat shall be a Honeywell Model No. T775A2009 or equal with a 40 to 100-degree Fahrenheit range.

Part 3 – Execution

Installation

Furnish and install wall-mounted cooling thermostat as shown on the Plans. Mount thermostat 4 feet above finished floor in location shown on the Plans. Set thermostat at 75 degrees Fahrenheit.

17.90 TESTING, STARTUP, AND TRAINING

17.90.1 Common Work for Testing, Startup, and Training

[CSI 40 61 21, 40 61 26, 40 80 00]

Part 1 – General

Summary

Total system hardware start-up is the responsibility of the Control System Integrator.

Maintenance

The Control System Integrator shall be solely and completely responsible for all hardware maintenance of the system from time of start-up to the date of acceptance, by formal action of the Owner, of all work under the contract. The Control System Integrator shall perform all such work required or considered to be required by the Owner to cause and maintain proper operation of the system and to properly maintain the system.

© 2023 RH2 Engineering, Inc.

Warranty

The Contractor shall cause the Control System Integrator to make any and all repairs, replacements, modifications and adjustments required to eliminate any and all defects in design, materials and workmanship which are disclosed within the one year guarantee period. The Control System Integrator shall begin all repairs, replacements, modifications and adjustments within twenty-four (24) hours of notification by telephone by the Owner and shall complete such repairs, replacements, modifications and adjustments within forty-eight (48) hours of notification. Should the Control System Integrator fail to begin the work within 24 hours or complete the work within 48 hours, the Owner may proceed to undertake or complete the work. In such event, the Contractor and his surety shall be liable for all costs incurred by the Owner.

Part 3 – Execution

Field Quality Control

Equipment Manufacturer's Support

1. The Control System Integrator shall pay for services of equipment manufacturer's field service representative(s) to:
    a. Inspect equipment covered by these Specifications.
    b. Supervise adjustments and installation checks.
    c. Conduct start-up of equipment and perform operational checks.
    d. Provide Owner with a written statement that manufacturer's equipment has been installed properly, started up and is ready for operation by Owner's personnel.

Repairs

The Control System Integrator shall correct all deficiencies and defects and make any and all repairs, replacements, modifications, and adjustments as malfunctions or failures occur.

The Contractor and the Control System Integrator shall anticipate that the Owner may delay acceptance of all work under the contract if, in the judgment of the Owner, malfunctions or failures in operation of the control system repeatedly occur after start-up. Both the Contractor and the Control System Integrator shall not be entitled to an extension of time or to any claim for damages because of hindrances, delays or complications caused by or resulting from delay by the Owner in accepting the work because of malfunctions or failures in operation of the control system.

17.91 Tests and Inspections

[CSI 40 61 21, 40 80 13]

Part 1 – General

Summary

Materials, equipment, and construction included under this specification shall be inspected in accordance with the specifications. Testing shall be performed by the Control System Integrator in accordance with Division 16, and this and subsequent sections of this division.

© 2023 RH2 Engineering, Inc.

Testing shall be required to determine if installed equipment and system(s) will operate in the manner in which they are intended to operate. The decision of the Owner upon the acceptability of the test procedures and conformance shall be final. The work will not be accepted until all testing has been satisfactorily performed.

Scheduling

The Contractor shall prepare factory and field test procedures to demonstrate conformance of the complete system to this specification. The Contractor shall submit the detailed test procedures within four weeks after the notice to proceed for the Engineer's review and approval.

The Contractor shall furnish all labor, materials, tools, equipment, instruments and services necessary to perform all specific functional testing of all installed equipment and systems at no additional cost.

The Control System Integrator and Contractor shall notify the Owner and Engineer (Control System Programmer) of the factory testing date 30 days before testing.

The Contractor and Control System Integrator shall include in the schedule 2 consecutive working days as part of the factory testing for the Control System Programmer to test the control system software with the hardware supplied by the Control System Integrator at the Control System Integrator's shop.

The Control System Integrator and Contractor shall submit to the Engineer (Control System Programmer) a detailed field testing schedule identifying each day that both the Control System Integrator and Control System Programmer will need to be on site for field testing of equipment. A preliminary schedule shall be submitted to the Engineer for review 60 days before testing. A final schedule shall be submitted to the Engineer for review 30 days before testing.

The Contractor and Control System Integrator shall include in the construction schedule 10 consecutive working days between the completion of field testing and the startup phase for the Control System Programmer to perform field software testing. Startup shall not proceed until the software field testing is complete.

Part 2 – Products

Factory Testing

All factory testing of control panels and computer systems shall be performed at the Control System Integrator's shop.

The completed control system shall be tested in the shop by the Control System Integrator and the Control System Programmer. All motor control centers and VFD's supplied by the Control System Integrator shall be interconnected with the control system and powered with rated incoming voltage. Testing shall be conducted in two phases. The initial hardware testing shall include, but not be limited to, operation of all input and output (I/O) points, control devices and motor controllers. The subsequent testing shall include, but not be limited to, testing of RTU programming and Operator Interface provided by the Control System Programmer.

The initial hardware testing of the control system shall include the following:

© 2023 RH2 Engineering, Inc.

1. The entire assembled panels shall be meggered and tested to be free from grounds and shorts.
2. Energize each discrete input and output and simulating each analog input and output using a loop simulator and calibrator. Circuits not energized shall be tested for continuity. Discrete input signals shall be tested in both the "on" and "off" state. Analog signals shall be tested at a minimum of three values (4 mA, 12 mA, and 20 mA). The test results shall be documented by the Control System Integrator in checklist format. The final test results shall be signed by both the Engineer and Control System Integrator prior to shipment of equipment to the job site.
3. Provide signal generators, multimeters, and other test equipment as required to verify proper operation of the assembled panels.
4. The Control System Integrator shall interconnect the control panels with the motor control centers and VFD's for both hardware and software testing phases. Control panels shall initially be hardware tested in one group. Similarly, the motor control centers and VFD's shall be hardware tested in another group. After both groups of hardware are confirmed to be operating correctly, the Control System Integrator shall interconnect the equipment with Ethernet cables and analog and discrete wiring as shown on the Plans. The equipment shall remain connected for the remainder of the factory testing period.
5. Correct, replace, or repair control panel and motor control center wiring, and/or components until testing demonstrates proper operation. Control panels and motor control centers shall not be shipped to the job site until testing has demonstrated complete operation of the panels.
6. Provide updated and complete as-built drawings for the control panels and motor control centers at the time of final factory testing. The Engineer shall review the drawings against the panel construction at the time of final factory testing. Drawings which do not reflect the actual construction of the panel shall be revised and reviewed again by the Engineer. As-built drawings that require revisions shall be submitted to the Engineer for review prior to shipment of equipment to the job site. This review process shall be repeated as necessary so that as-built drawings reflect the actual construction of the panels and motor control centers at the time of shipment. Panels and motor control centers shall not be shipped to the job site until the as-built drawings are updated, complete, and reflect the actual as-shipped status of the equipment.

Upon completion of the initial hardware testing, Control System Programmer shall conduct software testing for final inspection by the Owner. The Control System Integrator shall provide for time, equipment and support in their shop for Control System Programmer to completely demonstrate the functions of the entire control system. All control functions and all status and alarm monitoring and indication shall be demonstrated under simulated operating conditions. Simulating equipment shall be provided and wired into the control system for this testing. Testing shall be continued for the time period required by the Owner to observe and verify any revisions and as described above in the scheduling portion of this specification.

© 2023 RH2 Engineering, Inc.

Part 3 – Execution

Field Quality Control

Following installation by the Contractor, the Control System Integrator will verify the correctness of the interconnecting wiring and energize all control equipment in the field. Each point at the controller(s) shall be checked for proper functional operation through communication with the central computer.

Field Tests

The Control System Integrator in conjunction with the Contractor shall conduct field tests of all panels, motor control centers, VFD's, and instrumentation in the presence of the Engineer after installation of the equipment at the site. Testing shall be conducted by physically actuating signaling devices, installing temporary jumpers, or artificially imposing signals on the field wiring. This shall be done to establish proper operation of the field devices, the integrity of the field wiring, and the proper connection of field devices to the panels. The Contractor and Control System Integrator shall coordinate with the Engineer to provide for as complete testing of the control system as is practical prior to placing the equipment on line for actual control and monitoring. The Contractor and Control System Integrator shall make corrections or repairs to the wiring and/or devices as necessary to provide proper operation of the system.

After the initial testing is complete, commissioning shall be accomplished by the Control Systems Integrator, Control System Programmer, and Contractor, with the Owner and Engineer present. Commissioning shall include operation and verification of all control components and features of the entire control system. Each function shall be demonstrated to the satisfaction of the Owner.

Repairs

Should any part of the system fail during the test, the test shall be rescheduled and repeated to the satisfaction of the Owner after repairs.

17.92 Startup

[CSI 40 80 15]

Part 1 – General

Summary

All testing, startup and operation shall not be cause for claims for delay by the Contractor, and all expenses accruing therefrom shall be deemed to be incidental to this contract. The Contractor shall make arrangement for all materials, supplies and labor necessary to efficiently complete the testing, startup and operation.

Startup shall consist of testing, by a simulated operation, all operational equipment and controls. The purpose of these tests shall be to check that all equipment will function under operating conditions, that all interlocking controls and sequences are properly set, and that the facility will function as an operating unit.

© 2023 RH2 Engineering, Inc.

Scheduling

Factory representatives of all major units shall be present for the startup phase. The test shall continue until it is demonstrated that all functions of controls and machinery are correct.

Part 3 – Execution

Field Quality Control

When the installation of the Control System is substantially complete, the Contractor shall commence with calibration and field testing. Testing shall determine that all system components connect up correctly to each other so that the system works as designed. Refer to section 17.91 for field testing requirements.

All components of the control system shall be calibrated by the Control System Integrator after completion of installation. Each component shall be adjusted to be within the Manufacturer's required range and for the specific application.

Components that cannot be properly calibrated or that are found to exceed the Manufacturer's specified range or accuracy shall be removed and replaced at no additional cost to the Owner.

The control system shall be placed into operation by the Control Systems Integrator and Control System Programmer.

The Control System Integrator shall calibrate all instruments, indicators, recorders, loops, etc. and shall provide a five-point calibration test results sheet for each calibrated instrument supplied by the Control System Integrator. The five-point calibration shall include one point at: Minimum input range value, Maximum input range value, Midrange input value, no other point less than 25 percent of span to any other point. Test forms shall identify each instrument tested, input conditions vs. output signal results in tabulated form, and shall be submitted to the Engineer prior to final commissioning.

Repairs

All deficiencies observed during the start-up will be corrected by the Contractor.

17.93 Training

[CSI 40 61 26]

Part 1 – General

Submittals

Submit index of all training offered by PLC system equipment manufacturers including operation and maintenance.

The Control System Integrator shall prepare and assemble specific instruction materials for each training session and shall supply such materials to the Owner at least 2 weeks prior to the time of the training.

The Control System Programmer will provide additional training that is separate from this contract.

© 2023 RH2 Engineering, Inc.

Part 3 – Execution

Hands-On Training

The Control System Integrator shall conduct specifically organized training sessions in operation and maintenance of the control system for personnel employed by the Owner. The training sessions shall be conducted to educate and train the personnel in maintenance and operation of all components of the control system. Training shall include, but not be limited to, the following:

1. Preventative maintenance procedures
2. Trouble-shooting
3. Calibration
4. Testing
5. Replacement of components

At least two separate training sessions, each at least 4 hours in duration, shall be conducted at the facility after start-up of the system.

17.94 Documentation

17.94.2 Operations and Maintenance Manuals

[CSI 40 80 23]

Part 1 – General

Summary

Two types of operation and maintenance manuals (O&M) will be required for the contract:

1. General manuals for use by the Water Department staff for daily operation, maintenance and troubleshooting.
2. Technical manuals for use by trained electronics technicians for technical and "board level" maintenance and repair.

Submittals

Prior to the receipt of payment for more than 50 percent of the work, the Contractor shall deliver to the Owner one set of acceptable manufacturer's operating and maintenance instructions covering each piece of mechanical and electrical equipment, or equipment assembly, furnished under this contract. Each set of instructions shall be bound into multiple volumes; each volume to be complete with and index and bound in a suitable hard-cover binder. Manuals shall be assembled and indexed so that information on each piece of equipment can be readily found. Any additional operating and maintenance instructions from the Control Systems Programmer will be submitted separately.

Quality Assurance

Manuals shall be purposefully made for this installation, and general manuals which are vague or have limited applicability will not be accepted. The manuals shall be written in a non-

© 2023 RH2 Engineering, Inc.

technical format suitable for reading by water system operators with no previous automatic control equipment experience. The decision of the Owner on the acceptability of the manual shall be final.

Part 2 – Products

Materials

The Control System Integrator shall prepare and assemble detailed operation and maintenance manuals in accordance with the project general requirements. The manuals shall include, but not be limited to, the following:

1. Name, location and phone number of nearest supplier and spare part warehouse.
2. Step by step operating procedures.
3. Narrative of overall system performance and operation.
4. Listing of all equipment setpoints.
5. Preventative maintenance procedures
6. Trouble-shooting of master and remote equipment.
7. Calibration
8. Testing
9. Replacement of components
10. System schematics / shop drawings
11. As-built elementary and one-line diagrams
12. Catalog data and complete parts list for all equipment and control devices
13. Listing of recommended spare parts.
14. Listing of recommended maintenance tools and equipment.
15. Warranties.
16. Disassembly and reassembly instructions.

All plans shall be provided on hard copy and in electronic form on disk. Electronic drawing files shall be provided in both electronic PDF and AutoCAD .DWG formats with all "xrefs" bound. If "xrefs" are not bound, all "xref".DWG files shall be provided unlinked with instructions to reestablish the links. Files shall be in AutoCAD 2010 or later format.

© 2023 RH2 Engineering, Inc.

18.0 GENERAL

It is the intention of these specifications that performance of work under bid items shall result in complete construction, in proper operating condition, of improvements identified in these written specifications and accompanying plans. Work and material not specifically listed herein but required according to the plans and specifications and general practice shall be included in Contractor's bid price in the most closely applicable bid item.

If a minimum bid amount has been established for any item and the bidder's entry is less than the minimum specified amount, the Owner will unilaterally revise the price to the minimum specified amount and recalculate the total. The recalculated total will be used by the Owner for award purposes and to fix the contract price amount and the amount of the contract bond.

If a maximum or fixed bid amount has been established for any item and the bidder's entry exceeds the maximum or fixed specified amount, the Owner will reduce the bid item price to the maximum or fixed specified amount and relocate the offsetting amounts to bid items of the Owner's choosing.

Schedule A - Base Bid

Bid Item 1 – Mobilization, Demobilization, Site Preparation, and Cleanup

Lump sum price covers complete cost of furnishing, installing and testing, complete and in-place, all work and materials necessary to: move and organize equipment and personnel onto the job site; secure job site; provide and maintain necessary support facilities; obtain all necessary permits and licenses; prepare site for construction operations; maintain site and surrounding areas during construction; protect site from theft and intrusion, move all personnel and equipment off site after contract completion; cleanup site prior to final acceptance; and accomplish all other items of work not specifically listed in other divisions.

No more than 80-percent of bid amount for this item will be paid before final payment request, and this bid amount may not be more than 10-percent of value of total contract.

Bid Item 2 – Temporary Erosion and Sedimentation Control

Lump sum price shown shall cover the complete cost of providing all temporary erosion and sedimentation control relating to construction of improvements as shown on the Plans and detailed in these specifications and specified herein. Work includes, but is not limited to: silt fence, temporary trenching, temporary mulching, plastic sheeting, hydroseed,; control of water; dewatering and restoration of damage caused by storm events, and all other work necessary, for a complete installation of all temporary sedimentation and erosion control facilities.

© 2023 RH2 Engineering, Inc.

Bid Item 3 – Excavation Safety and Shoring

Lump sum price shown shall cover the complete cost of excavation safety and shoring including: all labor, materials, and equipment for the installation of the safety and shoring necessary for the work shown on the Plans, and detailed in the contract specifications, or as required by governing safety codes. Price includes design of the shoring system as required by applicable codes and standards, whether shown on the Plans or not. The price shall include all excavation safety and shoring necessary for the construction of the below grade clear well whether or not the Contractor chooses to use the excavation method shown on the plans.

Bid Item 4 – Demolition

Lump sum price shown shall cover the complete cost of providing all labor, materials, and equipment necessary for complete demolition, removal, and disposal of the existing pump house building and site elements including the roof, walls, equipment pads, concrete slab/floor as shown on the plans. Lump sum price shall also cover the complete cost of providing all labor, materials, and equipment necessary for demolition, removal, and disposal of existing electrical, plumbing, and mechanical including all items within the building that is not reused/relocated to the new pump house. Lump sum price shall also cover the complete cost of providing all labor, materials, and equipment necessary for demolition, removal, and disposal of all items outside the existing building that is shown to be removed on the plans including concrete pad, fencing and gate, overhead light, shed, culvert, and asphalt. The price shall also include demolition and abandonment of underground utilities as shown on the plans and the fill and abandonment of the existing clear wells.

Payment shall be lump sum.

Bid Item 5– Site Work

Lump sum price shown shall cover the complete cost of providing all site work relating to construction of improvements as shown on the Plans and specified herein. Work includes, but is not limited to: construction survey, staking and project control; clearing and grubbing; general backfill, and compaction; site grading; fine grading; swale; quarry spall pads; disposal of excess material; restoration (topsoil and hydroseed) for all disturbed areas not specifically called out as paving; fencing and gates; and all other work necessary for a complete installation of all site work. Lump sum price includes all crushed surfacing base course and crushed surfacing top course and asphalt paving. Payment shall be lump sum.

© 2023 RH2 Engineering, Inc.

Bid Item 6 – Dewatering

Lump sum price shown shall cover the complete cost of dewatering system design and approval to meet the requirements identified in these specifications, construction and maintenance of the dewatering system, and disposal of the excess groundwater. It is anticipated that dewatering for the clear well foundation installation will not be required. See test pit exploration results on the plans. Lump sum price shall only be paid if the Contractor determines dewatering is necessary and the Contractor submits and obtains approval for a dewatering plan and implements the dewatering plan during construction.

Bid Item 7 – Site Utilities

Lump sum price shown shall cover the complete cost of providing all materials, equipment and labor necessary for construction of the underground utilities as shown on the Plans and specified herein. Work includes, but is not limited to: trenching; disposal of excess material; control of water; select bedding; backfill; compaction; vaults; pipe, valves, fittings, restraint, structures materials and appurtenances for water (gravity and pressurized), stormwater, drains, overflow, and other underground utilities; and all other work necessary for a complete installation of all underground utilities. The price includes the packaged metering manhole and equipment pad, surge anticipator valve vault and all items, fittings, and rim, covers, foundation, connections and appurtenances within the packaged manhole and vault, and all overflow metering manhole items not provided by the packaged metering manhole supplier. The price includes all connection to existing utilities and manholes including all structures, fittings, and utility isolation necessary for connections to existing. The price does not include electrical and telemetry utilities which shall be included in the Electrical and Automatic Control bid items. The extents of site utilities shall be defined as those utilities outside the proposed pump house up to and including the first fitting outside the proposed pump house.

Bid Item 8 – Excavation

The lump sum price shown shall cover the complete cost of providing all materials, equipment, and labor necessary for the removal, moving, on-site placement (or off-site removal), and compaction of material excavated for the clearwell and building foundations. Lump sum price does not include excavation for utilities or utility structures, which is incidental to site utilities. The in ground "neat line" quantity is estimated to be 1,200 cubic yards as extrapolated from AutoCAD for the construction grading plan and final grading plan shown in the plans. Contractor shall take all precautions necessary to verify excavation quantities for the excavation method planned for by the Contractor. No additional compensation will be provided if the actual quantities vary from the estimate provided in this bid item description. The existing, construction grade, and final grade contours will be provided to bidders in AutoCAD 2023 format upon request.

© 2023 RH2 Engineering, Inc.

Bid Item 9 – Imported Structural Backfill

The unit price shown shall cover the complete cost of providing all materials, equipment, and labor necessary for imported structural backfill shown on the project plans. Unit price and quantity does not include backfill for utilities or utility structures, which is incidental to site utilities.

Measurement and payment shall be per ton of material as measured by truck tickets.

Bid Item 10 – Topsoil

The unit price shown shall cover the complete cost of providing all materials, equipment, and labor necessary for imported topsoil shown on the project plans for surface restoration, including the area for permanent on-site stockpiling of excavated soils.

Measurement and payment shall be per cubic yard of material in place.

Bid Item 11 – Structural

Lump sum price shown shall cover the complete cost of providing all materials, equipment and labor necessary for constructing the pump house structure and clear well complete as shown on the Plans and detailed in the contract specifications including: cast-in-place concrete, pre-cast concrete, masonry, grating and supports, miscellaneous metal work, pump pads, equipment pads, floor drains, doors and hatches, ceilings, insulation, carpentry, roof, waterproofing, coating, patching, testing, leak testing, and leak repair.

Bid Item 12 – New Pump and Motor (Pump No. 1)

Lump sum price shown shall cover the complete cost of providing all labor, materials and equipment necessary for the new pump and electric motor as shown on the Plans and detailed in the contract specifications. The lump sum price shall include all factory and field testing, manufacturer representatives, and warranties as required in these specifications.

Bid Item 13 – New Motor and Refurbish and Relocate Existing Pump (Pump No. 2)

Lump sum price shown shall cover the complete cost of providing all labor, materials and equipment necessary to refurbish the existing pump in order to lengthen the overall pump length to match the new pump. The price shall include all labor, materials and equipment necessary to relocate the existing refurbished pump, discharge head, and all pump components to the new pump house. Price shall include the new motor and all labor, materials and equipment necessary to install the new motor on the existing, refurbished, relocated pump to provide a fully complete and operational pump and motor. The lump sum price shall include all new motor factory and field testing, refurbished pump field testing, and manufacturer representatives as required in these specifications.

© 2023 RH2 Engineering, Inc.

Bid Item 14 – Mechanical

Lump sum price shown shall cover the complete cost of providing all labor, materials, and equipment necessary for the mechanical work shown on the Plans, and detailed in the contract specifications, including all mechanical work and equipment not listed in the other bid items. Lump price shown shall include the building Heating, Ventilation, and Air Conditioning (HVAC), installation of relocated flow meter, installation of spool in place of existing flow meter, specialties, and all pipe, fittings, appurtenances, and supports within the proposed building excluding the pump and motors. The lump sum price shall include all piping within the proposed building and up to but not including the first fitting outside the building envelope.

Bid Item 15 – Electrical

The lump sum price shown shall cover the complete cost of providing all labor, materials, and equipment necessary for the electrical work shown on the Plans, and detailed in the contract specifications.

Bid Item 16 – Telemetry and Automatic Control

Lump sum price shown shall cover the complete cost of providing all labor, materials, and equipment necessary for the automatic control system as shown on the Plans, and detailed in the contract specifications.

Bid Item 17 – Construction Records and O&M Manuals

Lump sum price shown shall cover the complete cost of providing all mark-up plans necessary for the Owner to create accurate as-built construction records as detailed in the specifications. The work includes surveying all structures and utilities to determine their as-constructed locations and elevations, records of all mechanical and electrical equipment for maintenance purposes, and operation and maintenance manuals. The price for this work will be $10,000. Failure to comply with the as-built requirements and furnish acceptable as-built records will result in the deletion of this bid item by change order.

Payment for this work will not be made prior to the final payment. Payment shall be lump sum.

Bid Item 18 – Testing, Startup, and Training

Lump sum price shown shall cover the complete cost of providing all labor and materials necessary for testing and startup of the project as shown on the Plans, and detailed in the contract specifications. Payment shall be lump sum. Partial payment of up to 50 percent of the total bid item cost is allowed no earlier than first Contractor initiated testing date. Final 50 percent of payment shall not be paid until testing of the station is complete, and the pump station is completely operational, and staff trained as determined by the Owner and Engineer. Minimum cost for this bid item shall be $15,000.

Bid Item 19 – Minor Change

Payments or credits for minor change work amounting to $10,000 or less may be under the bid item "Minor Change" at the discretion of the City. For the purposes of providing a

© 2023 RH2 Engineering, Inc.

common Proposal for all Bidders, the Contracting Agency has entered an amount of $50,000 for "Minor Change" in the Proposal to become part of the Bid by the Contractor. If no "Minor Change" agreements are entered into, no payments shall be paid for this bid item.

Schedule B - Additive Bid (Caustic Soda Treatment System Improvements)

Bid Item B1 – Caustic Soda Treatment System Improvements

Lump sum price shown shall cover the complete cost of providing all labor, materials, and incidentals necessary for the chemical systems shown on the Plans and detailed in the specifications, including all mechanical work and equipment not listed in the other bid items including bulk storage tanks, fill station, alarm panel, curbing, dike wall, pipe, fittings, and appurtenances. This work shall include but is not limited to: installation of the caustic soda bulk storage tanks and feed system complete and all associated piping, coatings of new and existing elements, valves, fittings and appurtenances required for a complete caustic soda treatment system. This work shall include all demolition; structural; mechanical; electrical; automatic control; and testing, startup, and training for the complete caustic soda treatment system.

Payment shall be lump sum.

© 2023 RH2 Engineering, Inc.

APPENDIX A
CITY STANDARD DETAILS

SOLID DUCTILE IRON LID

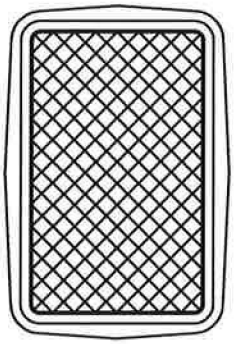

TOP VIEW

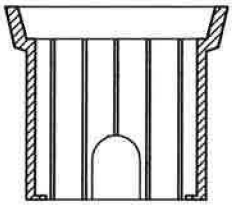

SHORT SIDE VIEW

DUCTILE IRON LID WITH READER DOOR AND AMR OPENING

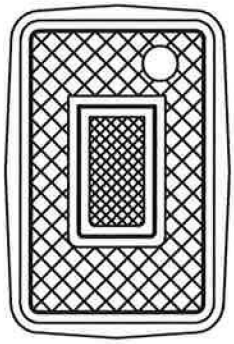

TOP VIEW

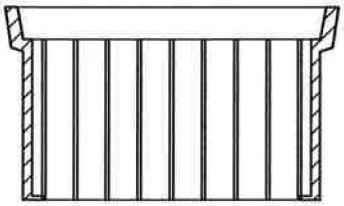

LONG SIDE VIEW

						OPTIONS	
*APPLICATION	MANUF.[1]	SIZE	MODEL	DEPTH	LID	READER DOOR	AMR OPENING
3/4" – 1" METER	CARSON	13"X24"	BCF1324	12"	DUCTILE IRON	☑	☑
1–1/2" – 2" METER	CARSON	17"X30"	BCF1730	12"	DUCTILE IRON	☑	☑
INDIVIDUAL PRV	CARSON	13"X24"	BCF1324	12"	DUCTILE IRON	SOLID LID	
TF250 HYDRANT	CARSON	17"X30"	BCF1730	18"	DUCTILE IRON	SOLID LID	
INDIVIDUAL DOUBLE CHECK	CARSON	17"X30"	BCF1730	18"	DUCTILE IRON	SOLID LID	
2" AIR & VACUUM RELEASE	CARSON	17"X30"	BCF1730	18"	DUCTILE IRON	SOLID LID	

*FOR LOCATIONS REQUIRING AN H20 TRAFFIC RATED BOX, THE FOLLOWING EQUIVALENT SIZED H20 TRAFFIC RATED BOXES AND CORRESPONDING LIDS SHALL BE INSTALLED.

EQUIVALENT SIZE	MANUF.[1]	SIZE	MODEL	DEPTH	LID	OPTIONS
13"X24"	OLYMPIC FOUNDRY	16"X22"	SM29	11"	DUCTILE IRON	SOLID LID
17"X30"	OLYMPIC FOUNDRY	16"X31"	SM30	16"	DUCTILE IRON	SOLID LID

1 MANUFACTURERS NOT LISTED SHALL HAVE APPROVAL IN WRITING BY THE CITY ENGINEER.

Approved: March 16, 2018

City Engineer Date

WATER STANDARD DETAIL

City of BONNEY Lake

Dwg No: W1

STANDARD WATER INFRASTRUCTURE BOX

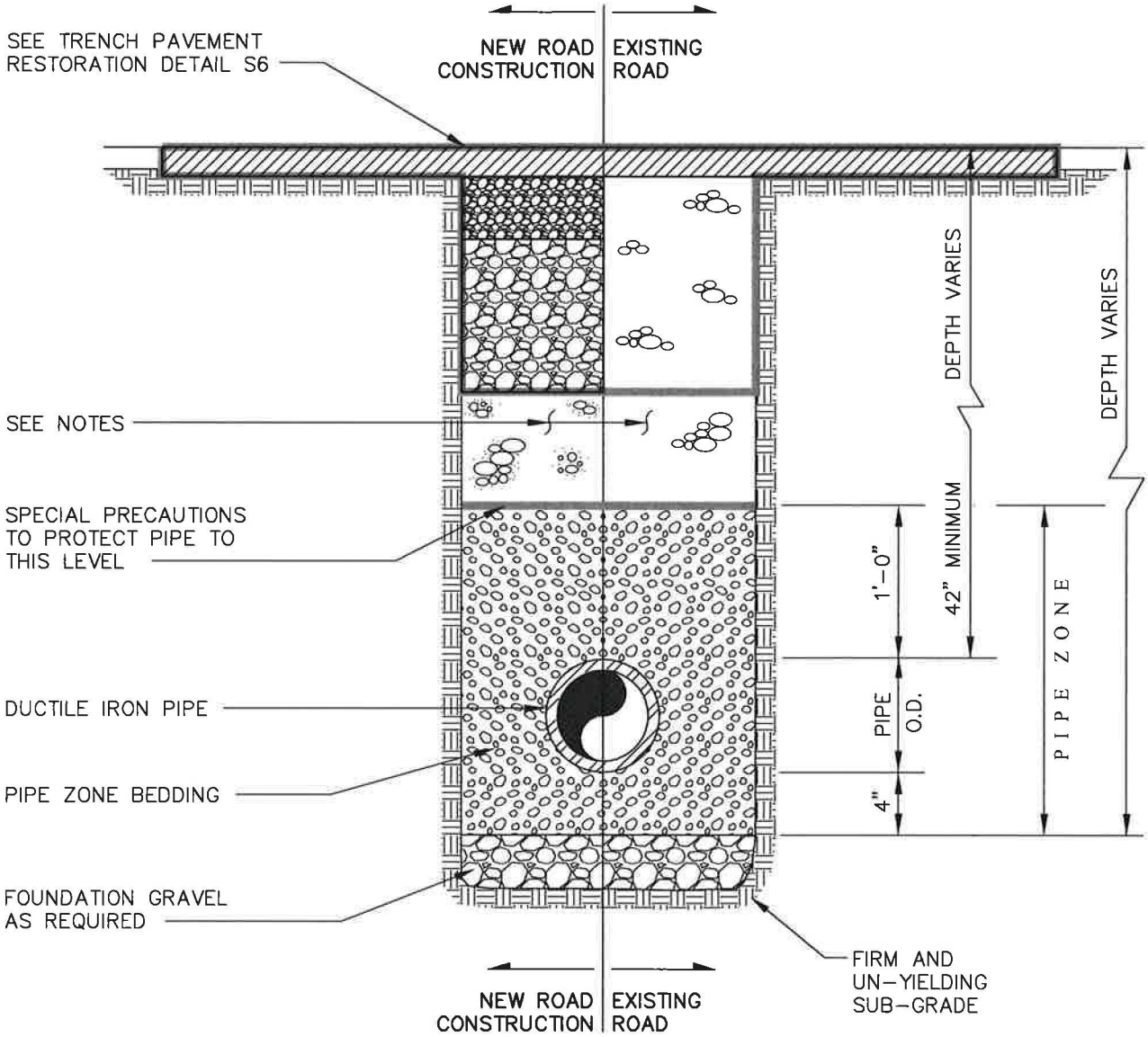

NOTES:

1. TRENCH SHALL BE BACKFILLED AND COMPACTED IN ACCORDANCE WITH WSDOT 7-09.3(10) & (11) OR AS APPROVED IN WRITING BY THE CITY ENGINEER.
2. PIPE ZONE BEDDING SHALL BE GRAVEL BACKFILL FOR PIPE ZONE BEDDING IN ACCORDANCE WITH WSDOT 9-03.12(3) OR AS APPROVED IN WRITING BY THE CITY ENGINEER.
3. FOR EXISTING ROADS, BACKFILL MATERIAL ABOVE THE PIPE ZONE SHALL BE 1¼" CRUSHED ROCK. FOR NEW ROAD CONSTRUCTION, BACKFILL MATERIAL ABOVE THE PIPE ZONE SHALL BE GRAVEL BORROW OR SELECT BORROW IN ACCORDANCE WITH WSDOT 9-03.14 OR 1¼" CRUSHED ROCK OR AS APPROVED IN WRITING BY THE CITY ENGINEER.

Approved: March 16, 2018 City Engineer Date **WATER STANDARD DETAIL**	City of BONNEY Lake	Dwg No: **W2** **WATER MAIN TRENCH SECTION**

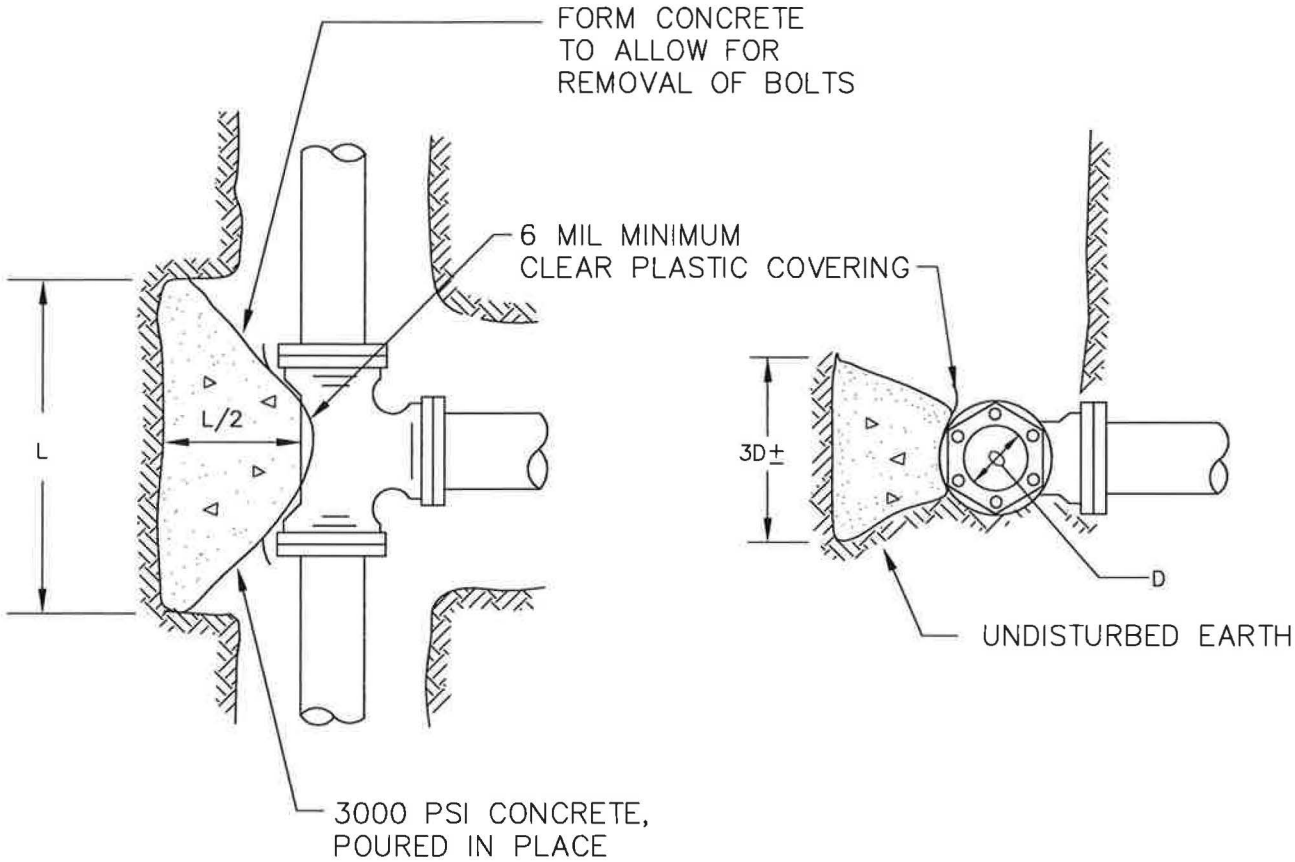

PLAN

ELEVATION

MINIMUM BEARING AREA TABLE					
FITTING DIA	TEE	90°	45°	22 1/2°	11 1/4°
6"	4 SQ.FT.	5 SQ.FT.	3 SQ.FT.	2 SQ.FT.	2 SQ.FT.
8"	7 SQ.FT.	9 SQ.FT.	5 SQ.FT.	3 SQ.FT.	2 SQ.FT.
10"	10 SQ.FT.	14 SQ.FT.	8 SQ.FT.	4 SQ.FT.	2 SQ.FT.
12"	15 SQ.FT.	20 SQ.FT.	11 SQ.FT.	6 SQ.FT.	3 SQ.FT.
16"	25 SQ.FT.	36 SQ.FT.	20 SQ.FT.	10 SQ.FT.	5 SQ.FT.

NOTE:

BEARING AREA TABLE BASED ON 250 PSI PRESSURE AND 2000 PSF SOIL BEARING. IF PRESSURE IS GREATER OR SOIL BEARING IS LESS, THE THRUST BLOCK SIZE SHALL BE INCREASED. USE WSDOT STD PLAN B-22a FOR SIZING THRUST BLOCKS.

THIS TABLE REPRESENTS THE "MINIMUM" CONSTRUCTION STANDARDS. THE DEVELOPER'S ENGINEER SHALL BE RESPONSIBLE FOR DETERMINING THE APPROPRIATE SIZE OF ALL THRUST BLOCKS BASED ON EXISTING AND LOCAL CONDITIONS.

Approved: March 16, 2018 City Engineer Date WATER STANDARD DETAIL	City of BONNEY Lake	Dwg No: W4 CONCRETE THRUST BLOCK

TYPE "A" BLOCKING FOR 11 1/4°–22 1/2°–30° VERTICAL BENDS						
		VB		S	D	L
PIPE SIZE NOMINAL DIAMETER– INCHES	TEST PRESSURE PSI	VERTICAL BEND DEGREES	No. OF CU. FT. OF CONC. BLOCKING	SIDE OF CUBE LIN. FT.	DIAM. OF SHACKLE RODS (2) INCHES	DEPTH OF RODS IN CONCRETE LIN. FT.
4"	250	11 1/4	6	1.8	5/8"	1.5
		22 1/2	12	2.3		
		45	22	2.8		
6"	250	11 1/4	14	2.4	5/8"	1.5
		22 1/2	27	3.0		
		45	50	3.7		
8"	250	11 1/4	25	2.9	5/8"	1.5
		22 1/2	48	3.6		
		45	89	4.5		
12"	250	11 1/4	55	3.8	5/8"	2.0
		22 1/2	108	4.8		
		45	200	5.1	7/8"	2.0
16"	250	11 1/4	98	4.6	5/8"	1.5
		22 1/2	192	5.8	7/8"	2.0
		45	355	7.1	1 1/8"	2.5

THIS TABLE REPRESENTS THE "MINIMUM' CONSTRUCTION STANDARD. THE DEVELOPER'S ENGINEER SHALL BE RESPONSIBLE FOR DETERMINING THE APPROPRIATE SIZE OF ALL ANCHOR BLOCKS BASED ON EXISTING AND LOCAL CONDITIONS.

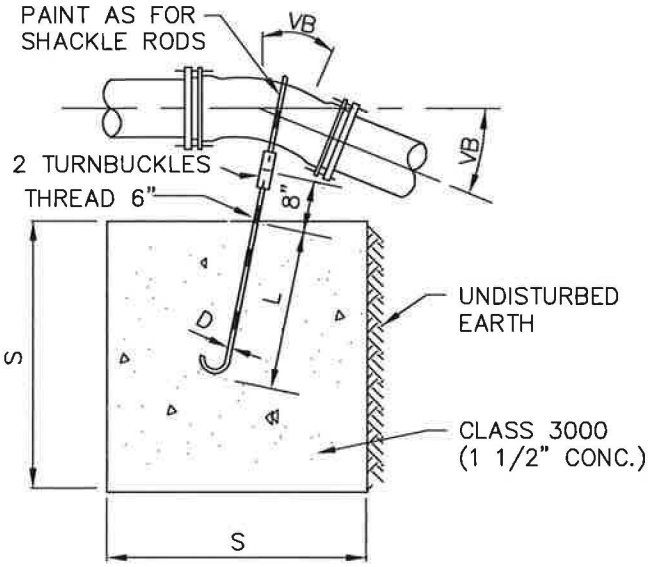

11.25° AND 22.5° BENDS

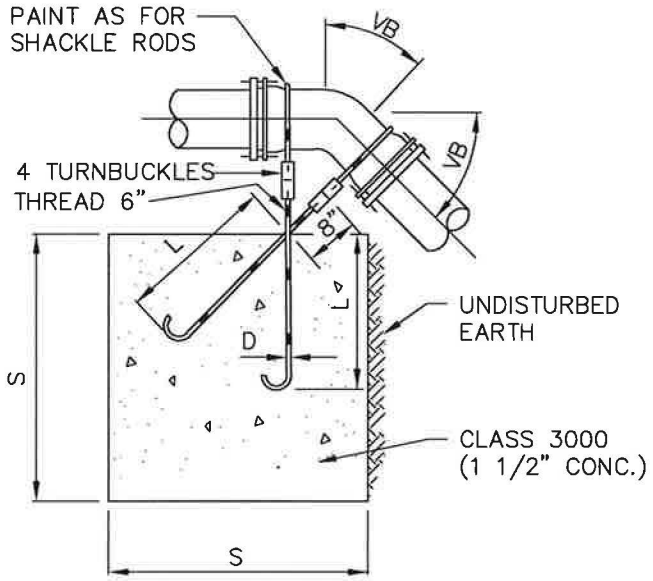

45° BENDS

Approved: March 16, 2018

City Engineer Date

WATER STANDARD DETAIL

City of BONNEY Lake

Dwg No: W5

VERTICAL ANCHOR BLOCK

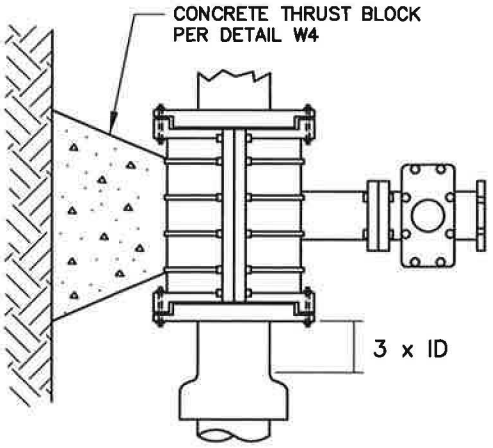

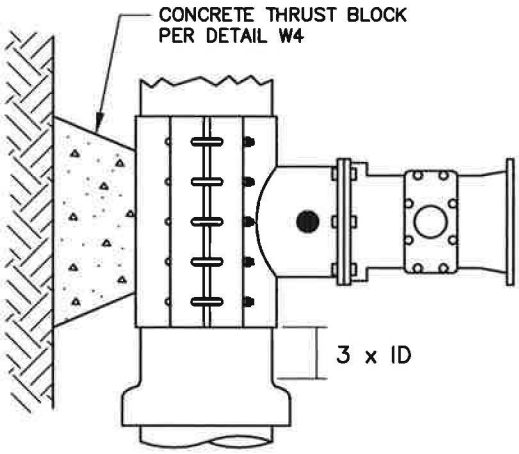

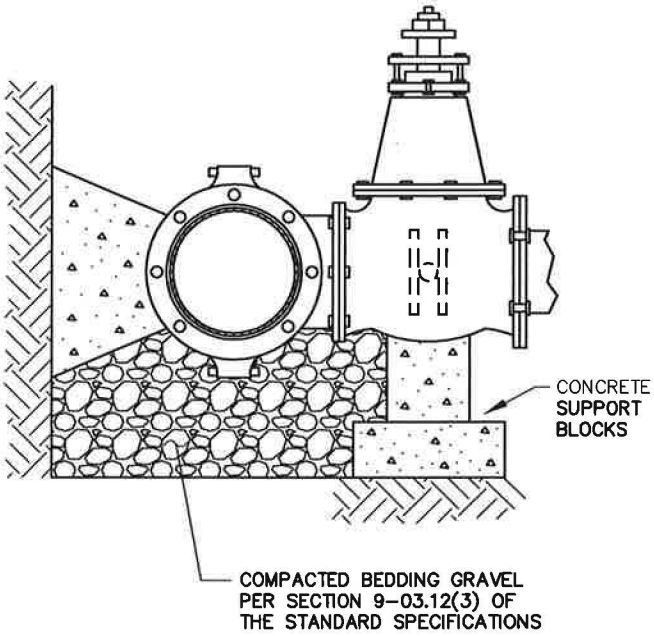

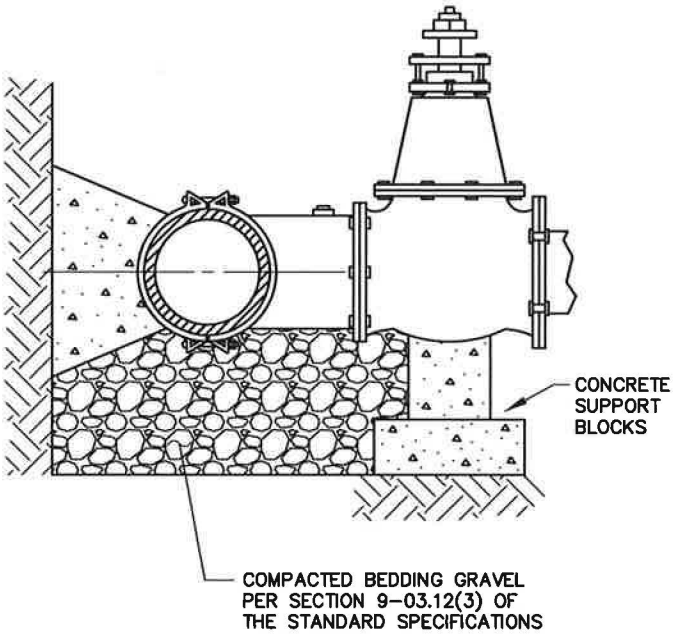

DUTILE IRON TAPPING TEE MECHANICAL JOINT SLEEVE

INSTALLED ON ASBESTOS CEMENT PIPE, CAST IRON PIPE AND DUCTILE IRON PIPE.

STAINLESS STEEL OR STEEL TAPPING TEE

STAINLESS STEEL TAPPING TEE

INSTALLED ON ASBESTOS CEMENT PIPE, CAST IRON PIPE AND DUCTILE IRON PIPE.

STEEL TAPPING TEE

INSTALLED ON DUCTILE IRON PIPE ONLY.

NOTES:

1. STAINLESS STEEL TAPPING TEES SHALL HAVE FULL CIRCLE SEAL. BOLTS AND NUTS SHALL BE STAINLESS STEEL.
2. STEEL TAPPING TEES SHALL BE EPOXY COATED. BOLTS AND NUTS SHALL BE COR-TEN, OR STAINLESS STEEL.
3. ALL TEES AND VALVES TO BE WATER TESTED BEFORE TAP.
4. TAPPING TEE MAY BE SIZE ON SIZE. TAP SHALL BE AT LEAST 2" SMALLER DIAMETER THAN THE EXISTING MAIN.

SPECIAL NOTE:
OPERATION SHALL BE BY CITY PERSONNEL ONLY. CONTRACTOR SHALL NOT OPERATE VALVE

Approved: March 16, 2018 City Engineer Date WATER STANDARD DETAIL	City of BONNEY Lake	Dwg No: W6 WET TAP CONNECTION

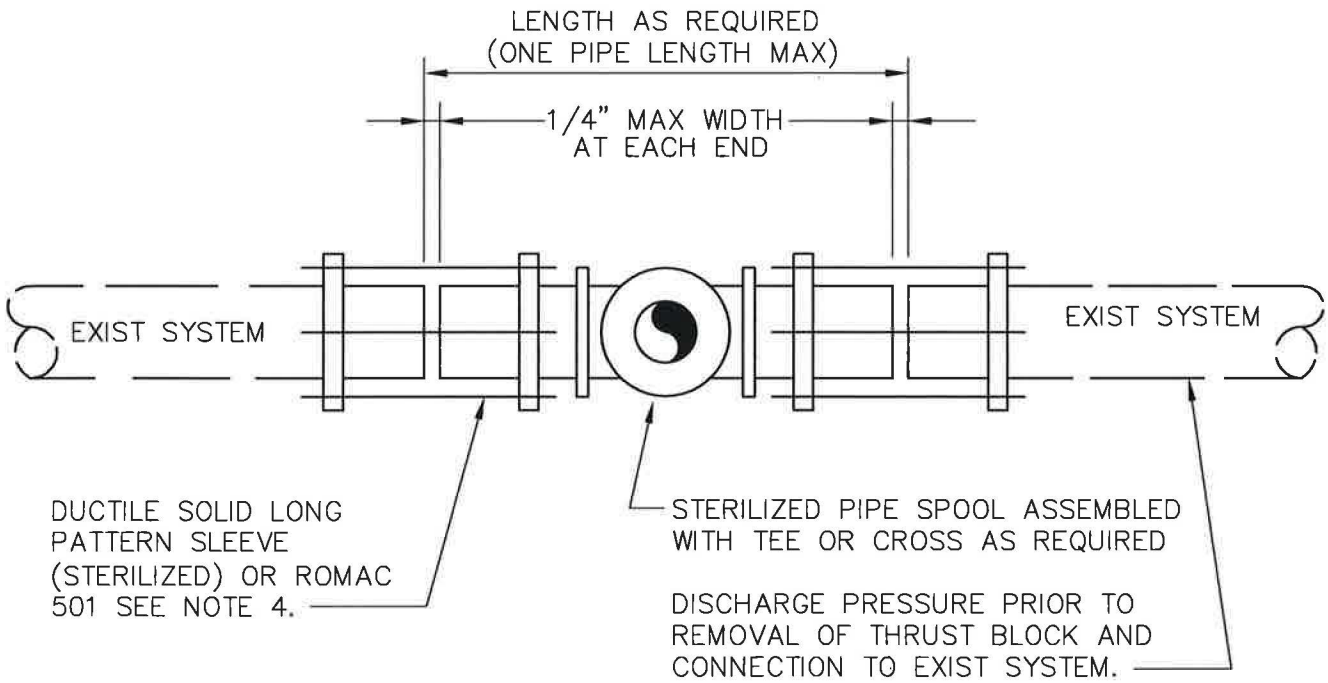

NOTES:

1. NO DEFLECTION SHALL BE ALLOWED AT EITHER COUPLING.
2. CUT-IN CONNECTIONS ON STEEL PIPE TO USE DIxOD STEEL TRANSITION COUPLINGS ROMAC OR EQUAL.
3. IN-LINE VALVE(S) IN EXISTING SYSTEM MAY BE REQUIRED AT THE SOLE DISCRETION OF THE CITY. (NOTE: VALVE(S) ARE NOT SHOWN ABOVE FOR CLARITY)
4. DUCTILE IRON LONG PATTERN SLEEVE IS REQUIRED WHEN CONNECTING TO CAST IRON, PVC, OR DUCTILE IRON PIPE. A ROMAC 501 COUPLING IS REQUIRED FOR CONNECTIONS TO ASBESTOS CONCRETE OR STEEL PIPE.

Approved: March 16, 2018 City Engineer Date WATER STANDARD DETAIL	City of BONNEY Lake	Dwg No: W7 CUT IN CONNECTION

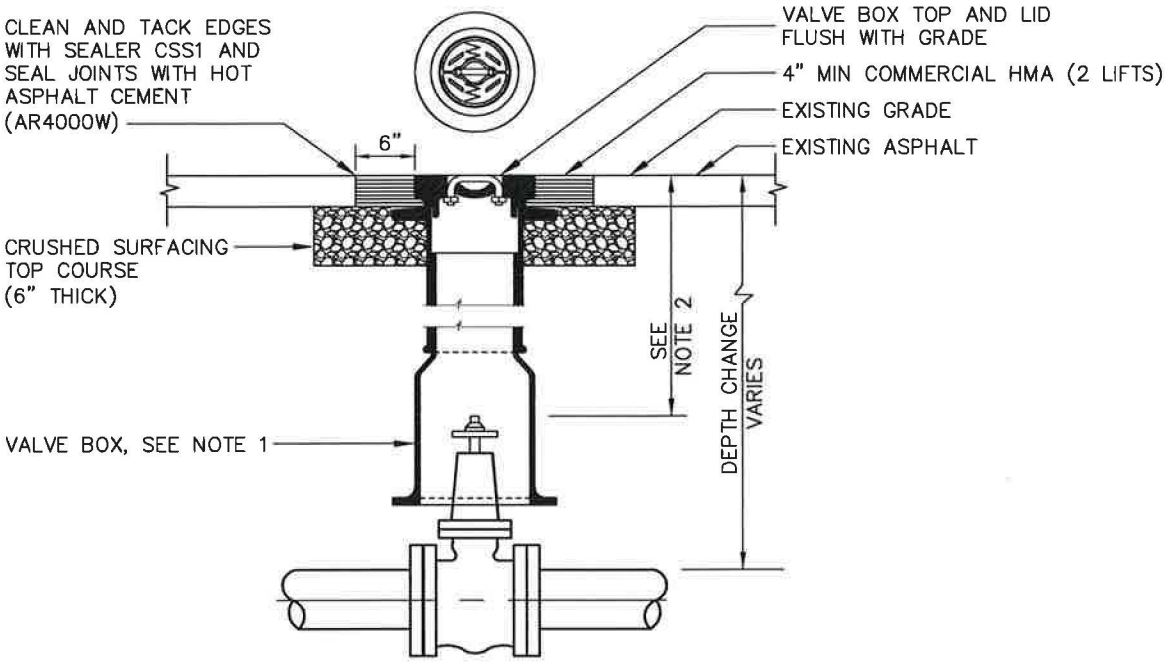

VALVE BOX IN ASPHALT AREA

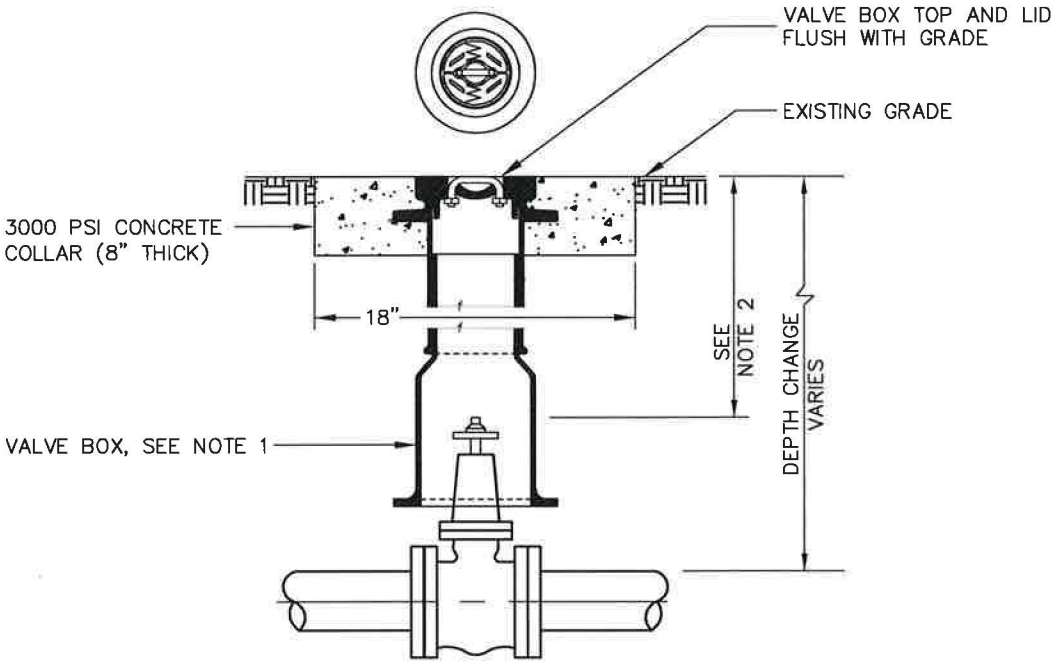

VALVE BOX IN UNIMPROVED AREA

NOTES:

1. EACH VALVE SHALL BE PROVIDED WITH THE FOLLOWING OLYMPIC FOUNDRY VALVE BOX PARTS OR APPROVED EQUALS; LID PART NO. 13-5010, TOP PART NO. 13-5020, & BASE PART NO. 13-5021.
2. 15" MINIMUM, 36" MAXIMUM FOR OPERATOR NUT. EXTENSION MAY BE REQUIRED, SEE DETAIL W19.
3. AS REQUIRED BY THE CITY, A VALVE MARKER POST PER DETAIL W24 SHALL BE INSTALLED WITH THE VALVE BOX IN UNIMPROVED AREAS.
4. VALVE BOX SHALL BE CENTERED ON VALVE.

Approved: March 16, 2018 City Engineer Date WATER STANDARD DETAIL	City of BONNEY Lake	Dwg No: W16 VALVE BOX

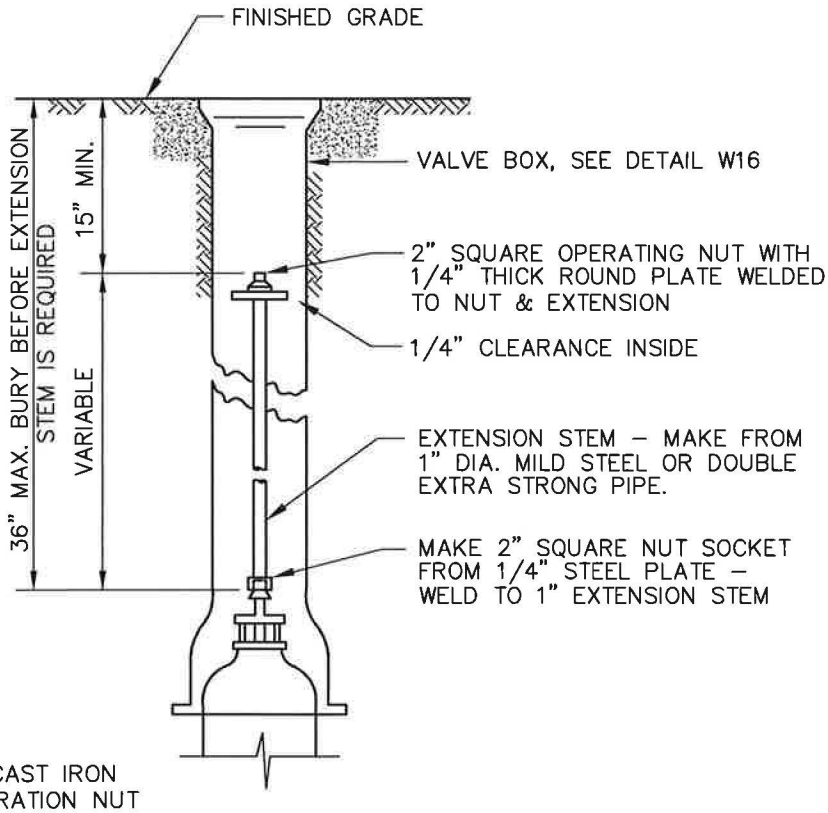

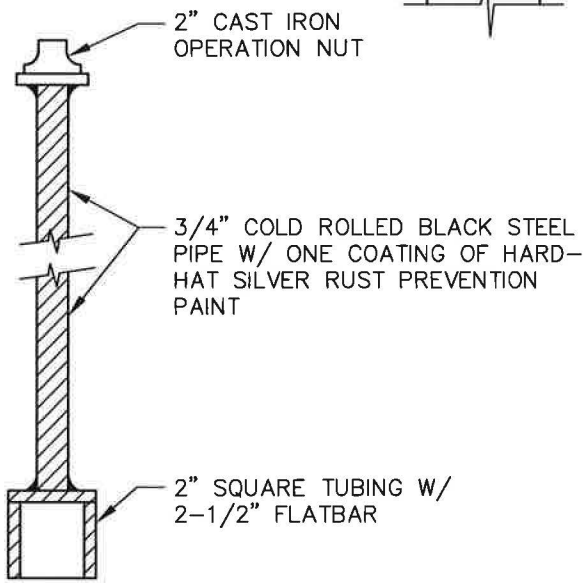

NOTES:

1. VALVE BOX SHALL BE CENTERED ON VALVE

Approved: March 16, 2018 City Engineer Date **WATER STANDARD DETAIL**	**City of BONNEY Lake**	Dwg No: **W19** **WATER VALVE STEM EXTENSION**

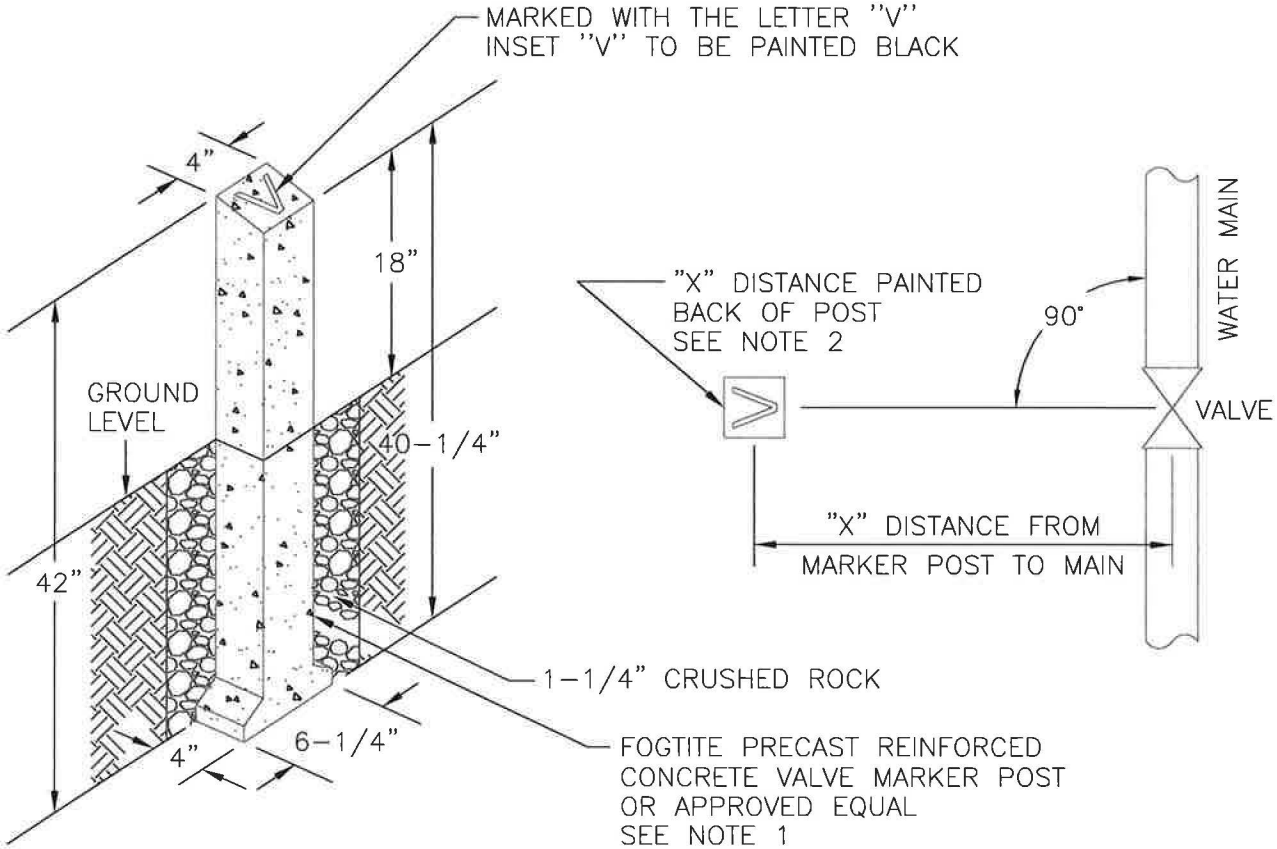

NOTES:

1. VALVE MARKER POST SHALL BE WHITE IN COLOR.
2. THE DISTANCE FROM THE MARKER POST TO THE WATER MAIN SHALL BE STENCILED ON THE BACKSIDE OF THE MARKER POST IN BLACK PAINT TO THE NEAREST FOOT AND 2" TALL.
3. VALVE MARKER POST SHALL BE REQUIRED WHEN A WATER VALVE IS LOCATED IN AN UNPAVED AREA.
4. POST SHALL BE REQUIRED FOR BLOW-OFF ASSEMBLIES IN THE SAME CONDITION AS WATER VALVES.
5. LOCATION OF VALVE MARKER POSTS SHALL BE OFFSET AT RIGHT ANGLES TO EACH LINE VALVE.

Approved: March 16, 2018 City Engineer Date **WATER STANDARD DETAIL**	City of BONNEY Lake	Dwg No: **W24** **VALVE MARKER POST**

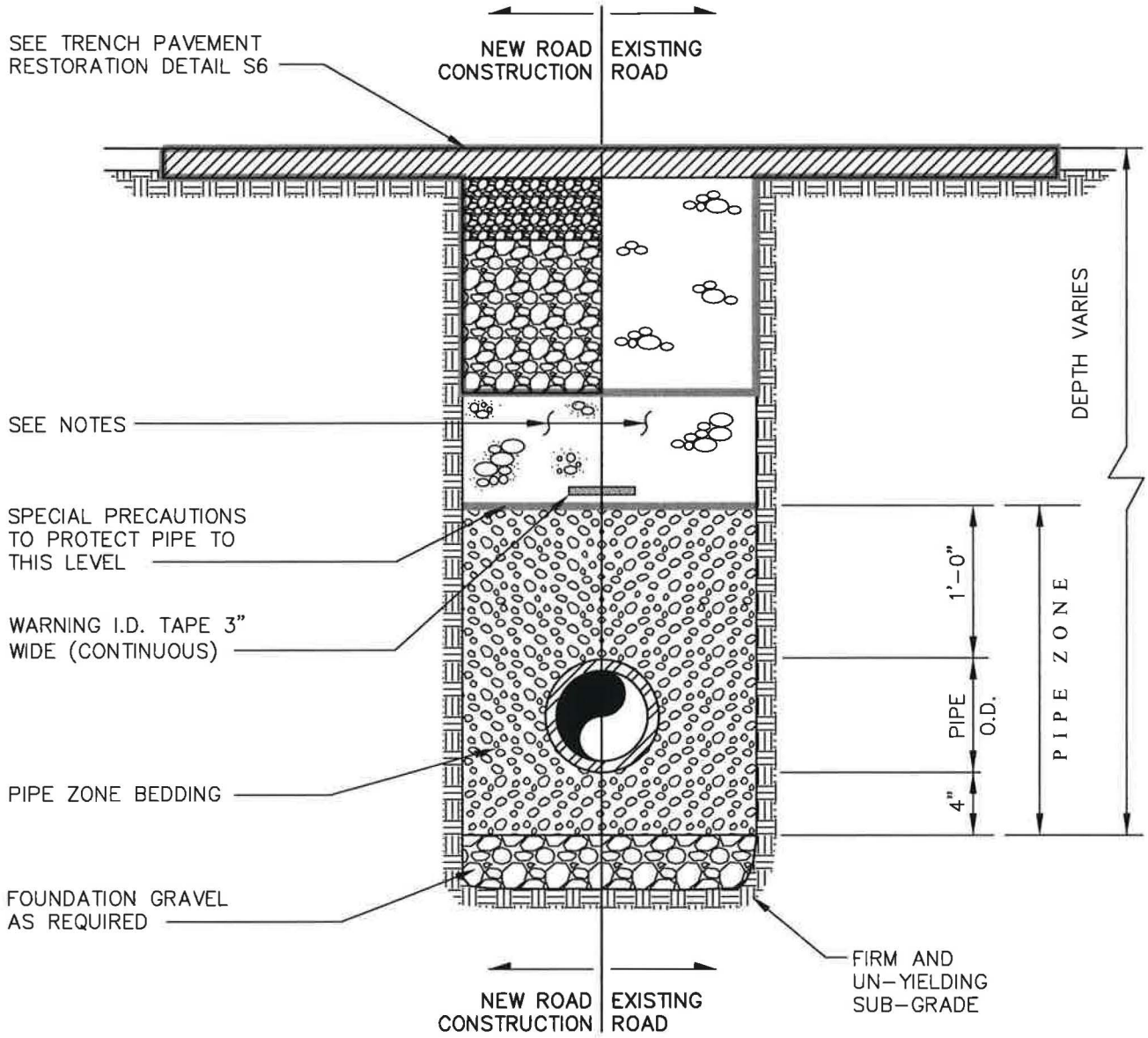

NOTES:

1. TRENCH SHALL BE BACKFILLED AND COMPACTED IN ACCORDANCE WITH WSDOT 7-08.3(3) OR AS APPROVED IN WRITING BY THE CITY ENGINEER.

2. PIPE ZONE BEDDING SHALL BE GRAVEL BACKFILL FOR PIPE ZONE BEDDING IN ACCORDANCE WITH WSDOT 9-03.12(3) OR AS APPROVED IN WRITING BY THE CITY ENGINEER.

3. FOR EXISTING ROADS, BACKFILL MATERIAL ABOVE THE PIPE ZONE SHALL BE 1¼" CRUSHED ROCK. FOR NEW ROAD CONSTRUCTION, BACKFILL MATERIAL ABOVE THE PIPE ZONE SHALL BE GRAVEL BORROW OR SELECT BORROW IN ACCORDANCE WITH WSDOT 9-03.14 OR 1¼" CRUSHED ROCK OR AS APPROVED IN WRITING BY THE CITY ENGINEER.

Approved: March 16, 2018 City Engineer Date STORM DRAIN STANDARD DETAIL	City of BONNEY Lake	Dwg No: SD1 TYPICAL STORM DRAIN PIPE TRENCH SECTION

FRAME AND GRATE:

1. THE FRAME AND GRATE SHALL BE EITHER VANED, BI-DIRECTIONAL VANED, OR A SOLID LOCKING COVER AS INDICATED IN THE APPROVED PLANS OR AS DIRECTED BY THE CITY.

2. MATERIALS AND SPECIFICATIONS FOR FRAMES AND GRATES SHALL BE PER THE WSDOT STANDARD PLANS AND SPECIFICATIONS

NOTE:

DEVIATION OF THE HORIZONTAL LOCATION OF THE CATCH BASIN LID FROM THE STRUCTURE SHALL NOT EXCEED 4-INCHES

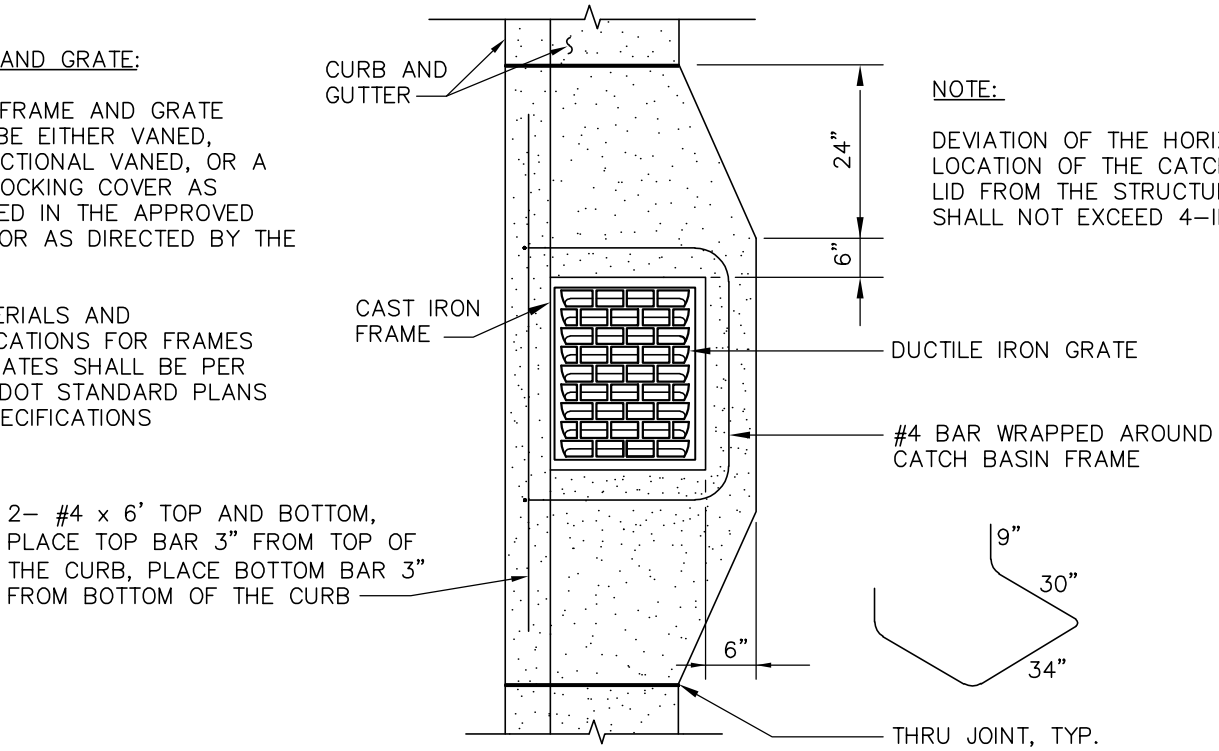

PLAN

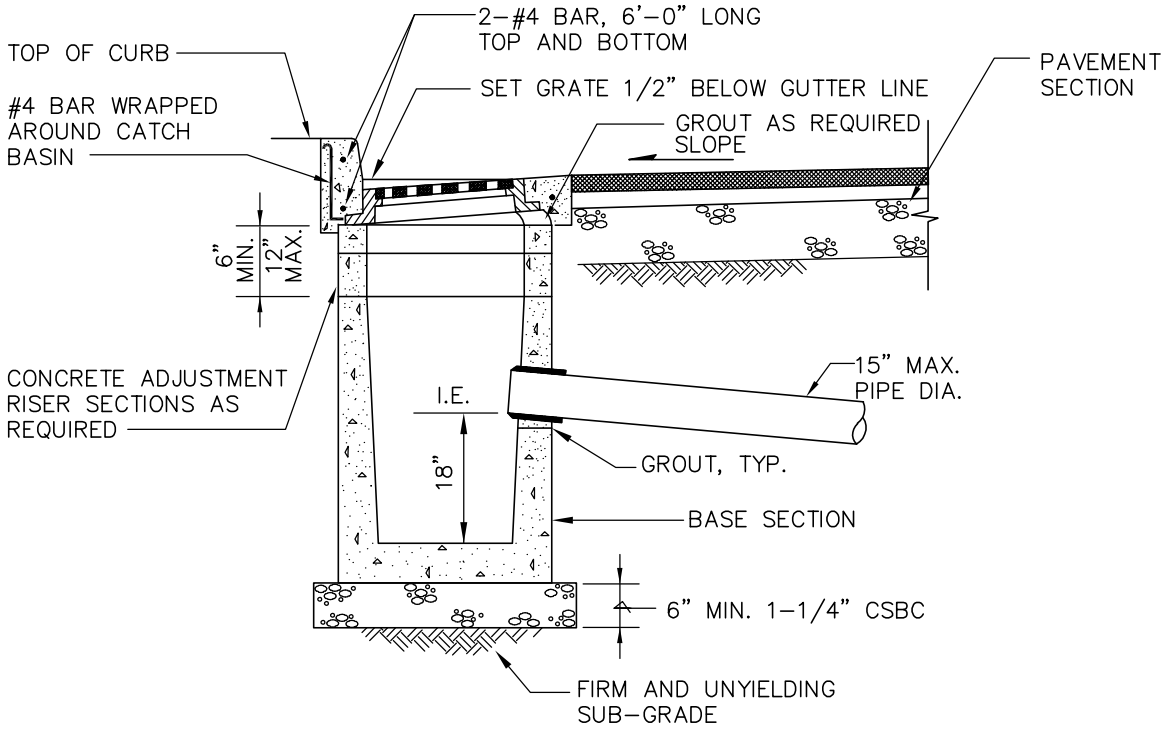

ELEVATION

NOTES:

1. PRE-FORMED CONCRETE MASONRY BRICKS SHALL BE USED TO ADJUST RIM TO THE FINISHED GRADE.

2. TYPE I CATCH BASIN IS USED FOR DEPTHS LESS THAN 5'-0" FROM THE TOP OF THE GRATE TO I.E. (INVERT)

Approved: September 28, 2020 City Engineer Date	City of BONNEY Lake	Dwg No: SD2
STORM DRAIN STANDARD DETAIL		CATCH BASIN TYPE I

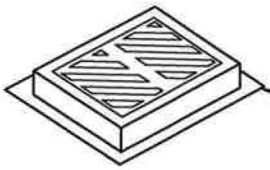

SQUARE FRAME AND OPEN GRATE, VANED GRATE, OR SOLID COVER, SEE DETAIL SD2.

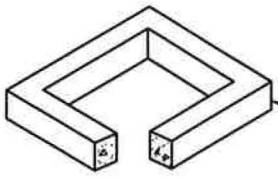

2"x4"x8" SOLID BRICK USED FOR FINAL ADJUSTMENT TO GRADE 6" HIGH MAX.

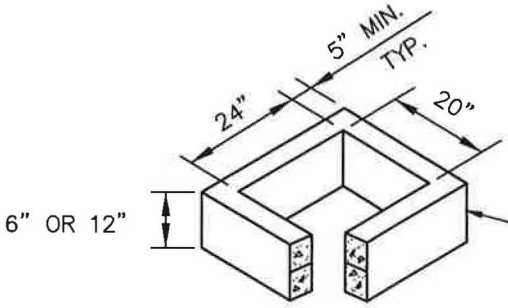

TOP SLAB WITH 24" ROUND ACCESS OR 20"x24" RECTANGULAR ACCESS

NOTES:

1. ALL TYPE 2 CB'S EQUIPPED WITH OPEN GRATES SHALL BE LOCKING TYPE.
2. ROUND LIDS SHALL BE AS SHOWN IN DETAIL.
3. CB'S SHALL BE SET SO THAT STEPS ARE DIRECTLY UNDER OPENING.
4. ALL TYPE II CB'S SHALL BE EQUIPPED WITH STEPS AND LADDER, SEE DETAIL SD5.
5. MINIMUM DISTANCE FROM THE LOWEST PIPE INVERT ELEVATION TO THE BOTTOM OF THE STRUCTURE SHALL BE 2-FEET.
6. CB SECTIONS AND LID WILL BE H-20 TRAFFIC LOAD CERTIFIED BY MFG.
7. HOLE SIZE = PIPE O.D. + 5"
   MAX MAX HOLE SIZE = 36" (48" CB) MAX
   HOLE SIZE = 42" (54" CB)
8. FOUNDATION MATERIAL SHALL BE 1-1/4" CSBC (8" MIN DEPTH) ON FIRM AND UNYIELDING SUB-GRADE MATERIAL.
9. THE CITY MAY REQUIRE THE STRUCTURE TO BE BACKFILLED WITH CONTROLLED DENSITY FILL WHEN THE EXCAVATION FOR THE STRUCTURE IS INSUFFICIENT TO ENSURE THAT THE CITY'S MINIMUM COMPACTION STANDARDS ARE MET.

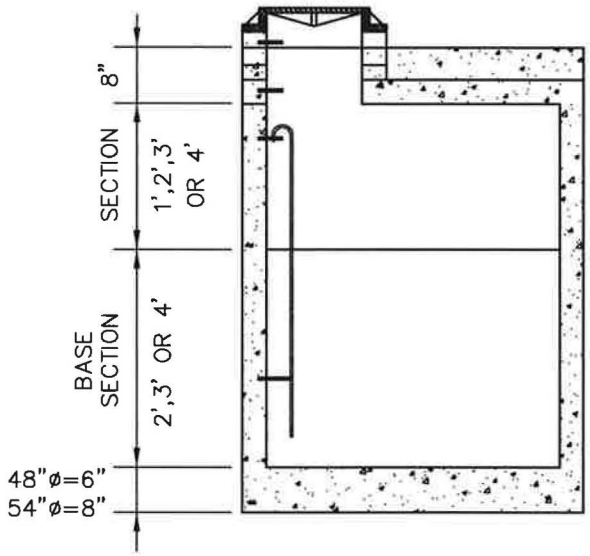

Approved: March 16, 2018 City Engineer Date **STORM DRAIN STANDARD DETAIL**	City of BONNEY Lake	Dwg No: **SD3** **CATCH BASIN TYPE 2**

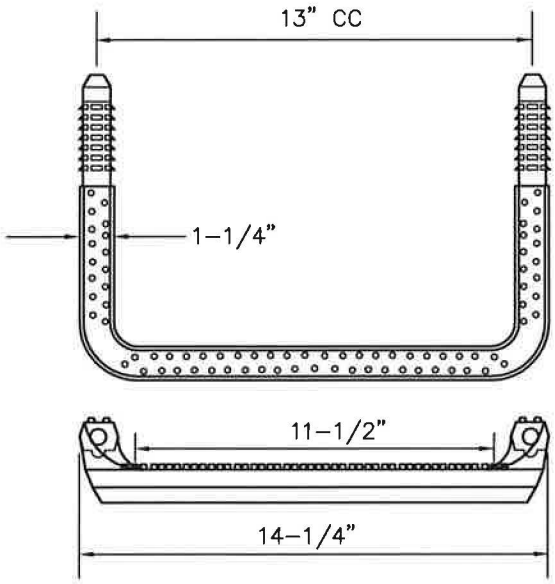

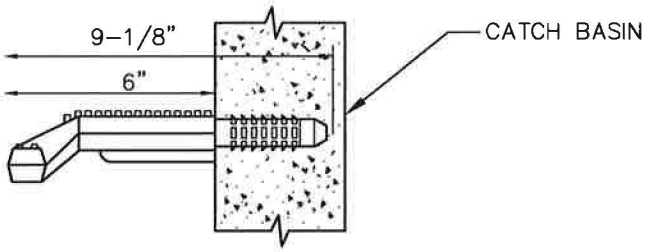

POLYPROPYLENE STEP, LANE NO. P-13938 OR EQUAL

POLYPROPYLENE STEPS

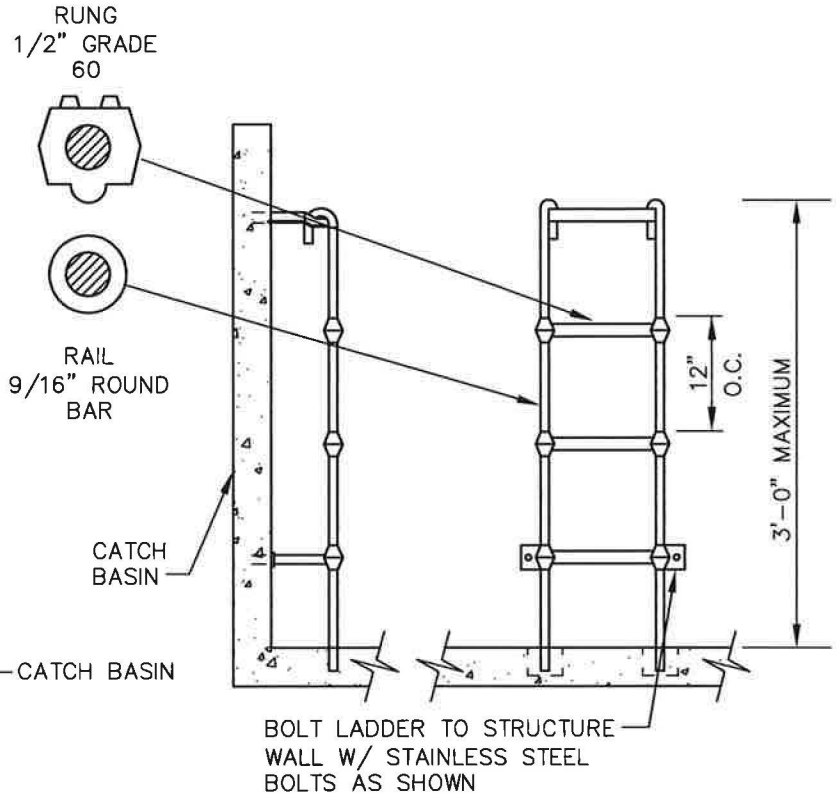

LADDER SHALL CONFORM TO POLYPROPYLENE ASTM D-4101 1/2" GRADE 60 REINFORCING BAR A-615 9/16" COLD DRAWN BAR C-1018

POLYPROPYLENE LADDER

Approved: March 16, 2018 City Engineer Date STORM DRAIN STANDARD DETAIL	City of BONNEY Lake	Dwg No: SD5 POLYPROPYLENE LADDER AND STEPS

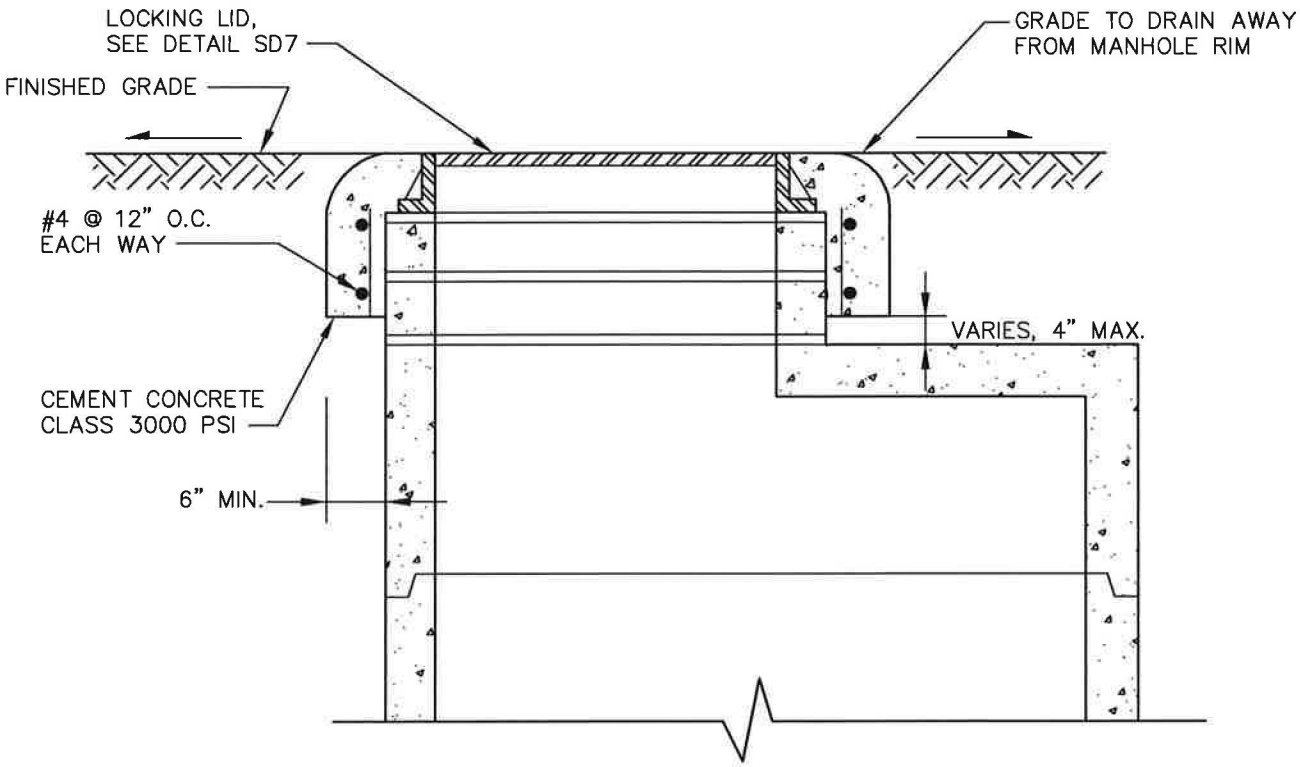

UNIMPROVED (UN-PAVED) AREAS

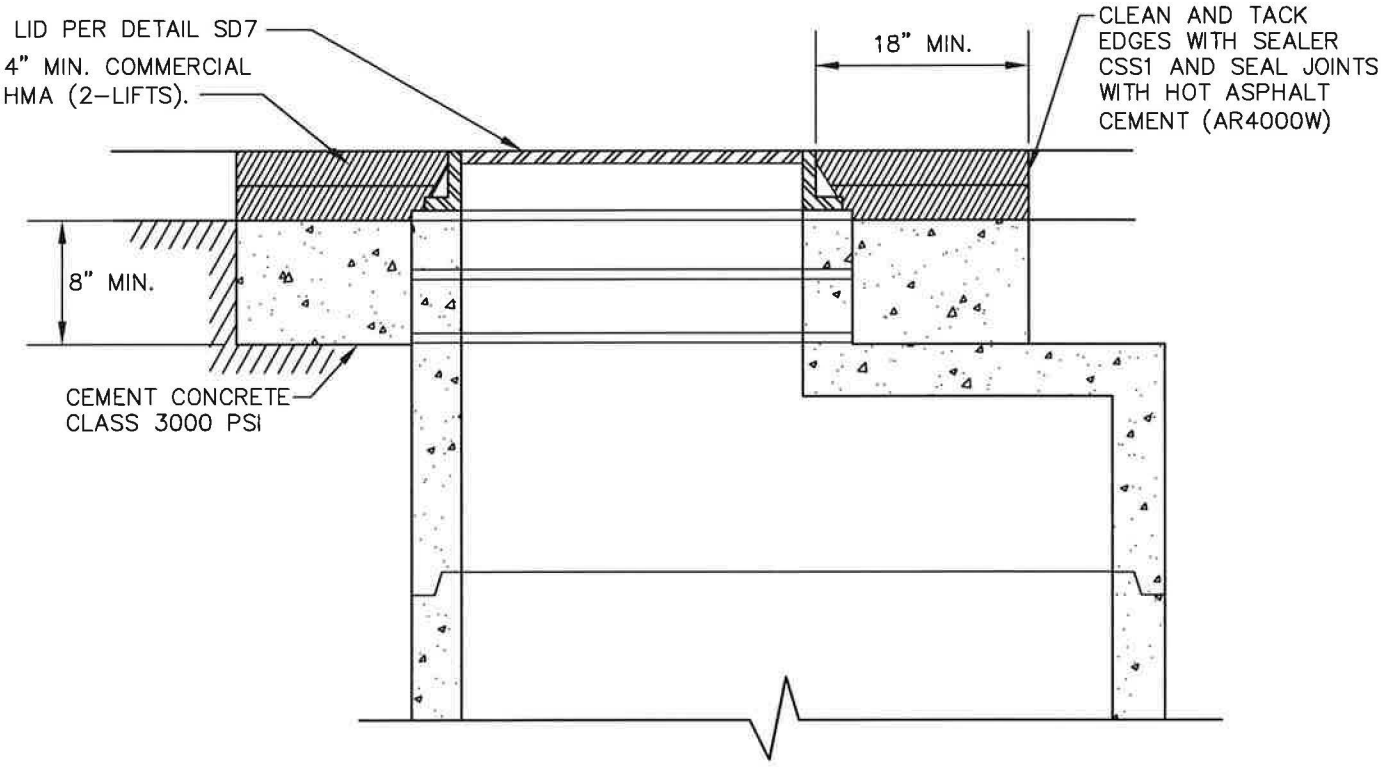

PAVED AREAS

Approved: March 16, 2018 City Engineer Date STORM DRAIN STANDARD DETAIL	City of BONNEY Lake	Dwg No: SD6 CATCH BASIN TYPE 2 FRAME AND COLLAR

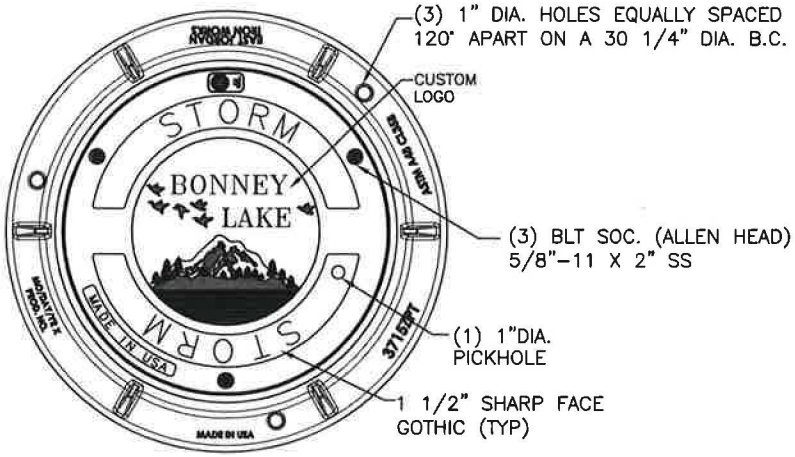

PLAN VIEW

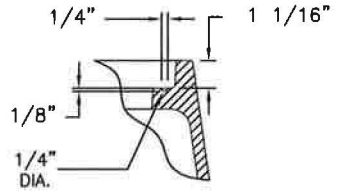

GASKET GROOVE DETAIL

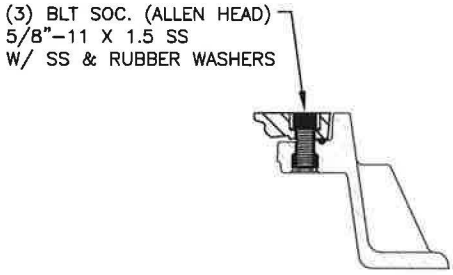

EON BOLTING DETAIL

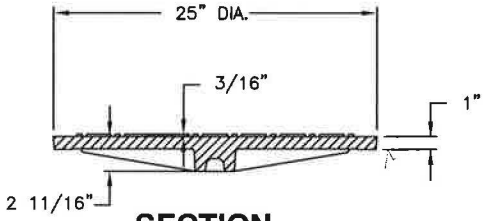

SECTION

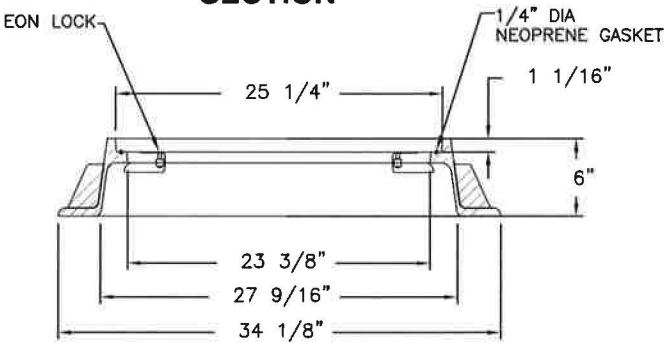

SECTION

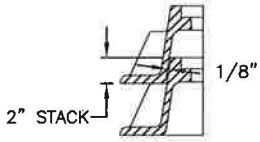

STACKING DETAIL

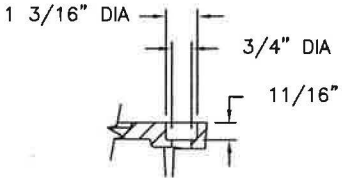

BOLTHOLE DETAIL

NOTES:

1. PRODUCTS MANUFACTURED BY EJ GROUP, INC. 800-626-4653 (PRODUCT NUMBER 00371581)
2. MATERIALS ARE DIPPED GRAY IRON ASTM A48 CL35B, LOAD RATING HEAVY DUTY
3. WATERTIGHT MANHOLE FRAME AND COVERS ARE REQUIRED AS DIRECTED BY THE CITY AND IN ALL LOCATIONS WHERE THE MANHOLE RIM IS SET BELOW FINISHED GRADE.

Approved: March 16, 2018 City Engineer Date STORM DRAIN STANDARD DETAIL	City of BONNEY Lake	Dwg No: SD7 SOLID ROUND FRAME AND COVER

APPENDIX B
RECORD DRAWINGS

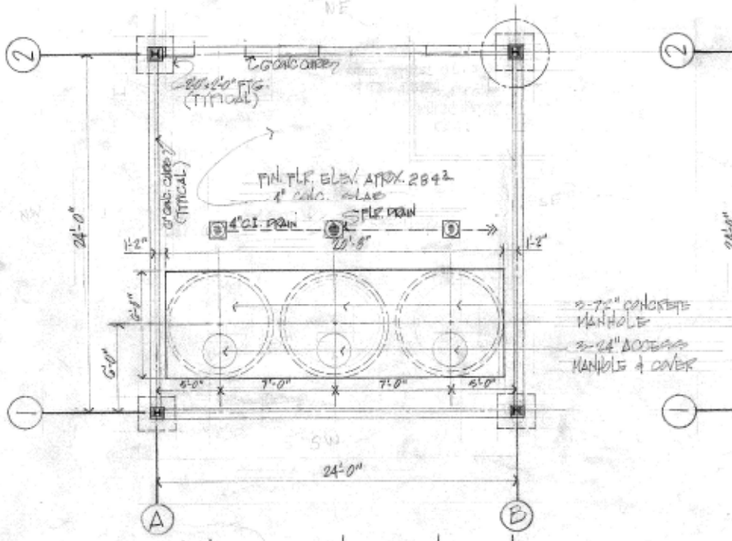

FOUNDATION PLAN
DO NOT SCALE

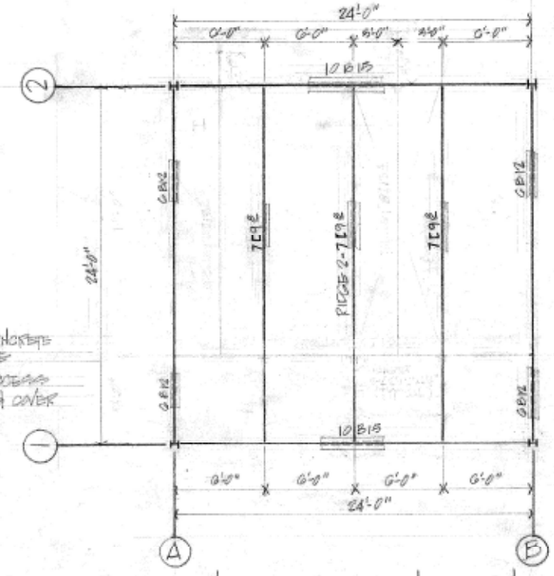

STEEL FRAMING PLAN
DO NOT SCALE

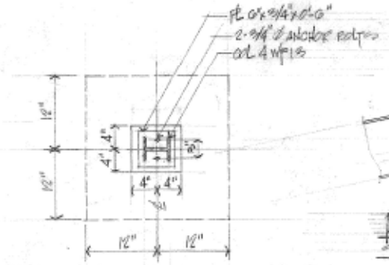

TYPICAL COL. DETAIL
SCALE 1"=1'-0"

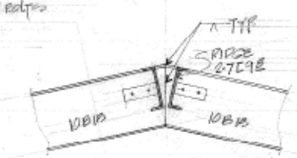

RIDGE DETAIL
SCALE 1"=1'-0"

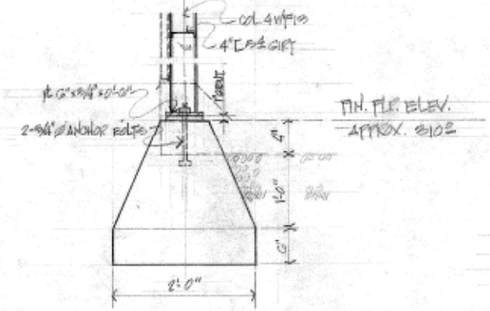

TYPICAL FTG. DETAIL
SCALE 1"=1'-0"

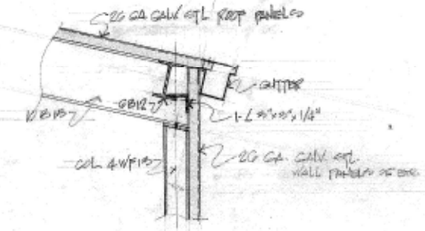

TYPICAL GUTTER DETAIL
SCALE 1"=1'-0"

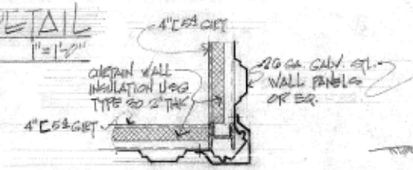

CORNER DETAIL
SCALE 1"=1'-0"

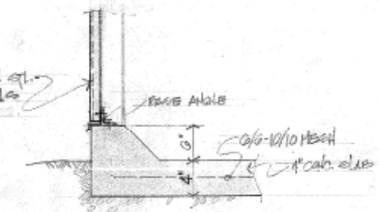

BASE TRIM
SCALE 1"=1'-0"

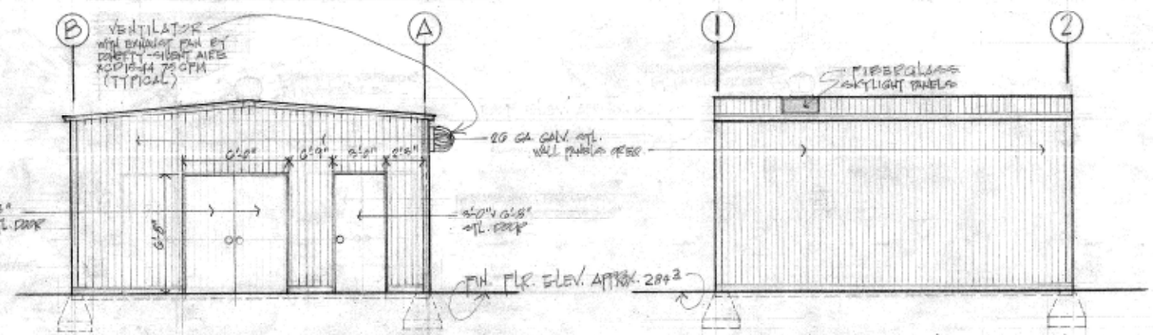

NORTHEAST ELEVATION
SCALE 1/4"=1'-0"

SOUTHEAST ELEVATION
SCALE 1/4"=1'-0"

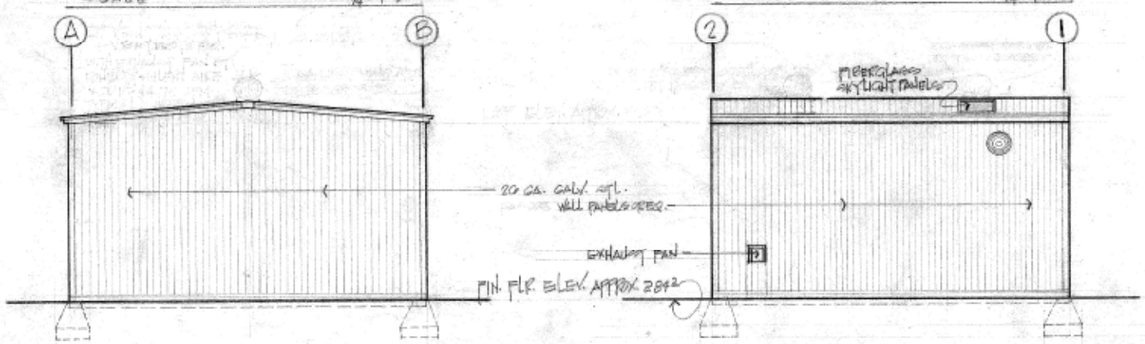

SOUTHWEST ELEVATION
SCALE 1/4"=1'-0"

NORTHWEST ELEVATION
SCALE 1/4"=1'-0"

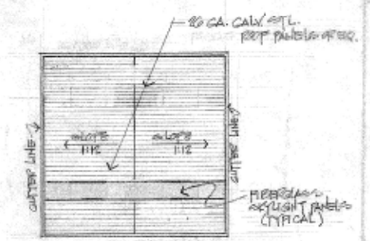

ROOF PLAN
SCALE 1/8"=1'-0"

NOTE:

1. STEEL BLDG. MAY BE A PROPRIETARY ITEM AS MANUFACTURED BY RAGCO, BUTLER OR EQUAL. CONTRACTOR SHALL INDICATE THE SUBCONTRACTOR HE INTENDS TO EMPLOY FOR THIS WORKS.

2. PREFABRICATED BUTLER BLDG. WAS INSTALLED.

AS BUILT DRAWING
DATE 8/4/79

HUD PROJECT NO. WS-WASH-187

CITY OF BONNEY LAKE, WASH.
GRANGER WATER SOURCE
STEEL BLDG. DETAILS - SCHED. "B"

CONSULTING ENGINEERS
PHILIP M. BOTCH & ASSOCIATES, INC.
831 AIRPORT WAY S. SEATTLE, WASHINGTON 98134

DRAWN: MT CHECKED: DATE: 6/23/72 DRWG. NO. 2/3

BILL OF MATERIAL

ITEM	DESCRIPTION	QUANT.	CLASS
1	6" GATE VALVE FxMJ IOWA	LIST 16	250
2	8" GATE VALVE FxF IOWA	LIST 16	250
3	6" GATE VALVE FxF IOWA	LIST 16	250
4	VALVE BOX	1	
5	4" CLAYVAL	2	61-P
6	12" 45° BEND MJxMJ	1	250
7	6" 45° BEND MJxMJ	1	125
8	12" 90° BEND FxMJ	1	250
9	6"x8" 90° RED. BEND FxF	1	250
10	4" 90° BEND FxMJ	2	125
11	4" 90° BEND MJxMJ	2	125
12	12"x12" TEE FxF	1	250
13	12"x8" TEE FxF	1	250
14	8"x8" TEE FxF	1	250
15	8"x4" TEE FxF	1	250
16	6"x4" TEE FxF	1	250
17	6"x4" TEE MJxMJ	1	125
18	4"x4" TEE MJxF	2	125
19	12"x8" RED FxF	1	250
20	12" SPOOL FxF 4'-0"±	1	250
21	8" SPOOL FxF 5'-3"	1	250
22	8" SPOOL FxF 5'-6"	1	250
23	6" SPOOL FxF 1'-9½"	1	250
24	12" NIPPLE FxPE 4'-1"±	1	250
25	4" NIPPLE PExPE 2'-8"±	1	100
26	4" NIPPLE FxPE 2'-8"±	2	100
27	4" NIPPLE PExPE 1'-3"±	1	100
28	4" NIPPLE PExPE 6'-0"	1	100
29	4" NIPPLE PExPE 5'-11"	1	100
30	8" CHECK VALVE FxF CHAPMAN	LIST 23½	250
31	6" CHECK VALVE FxF CHAPMAN	LIST 23½	250
32	12" SPARLING METER FxF	2'-9" LONG	250
33	12" CI PIPE	12 LF	250
34	6" CI PIPE	30 LF	100
35	4" CI PIPE	10 LF	100
36	4"x4" CONC. TEE	3	
37	4" DRAIN TILE	47± LF	
38	12"x6" RED FxMJ		250

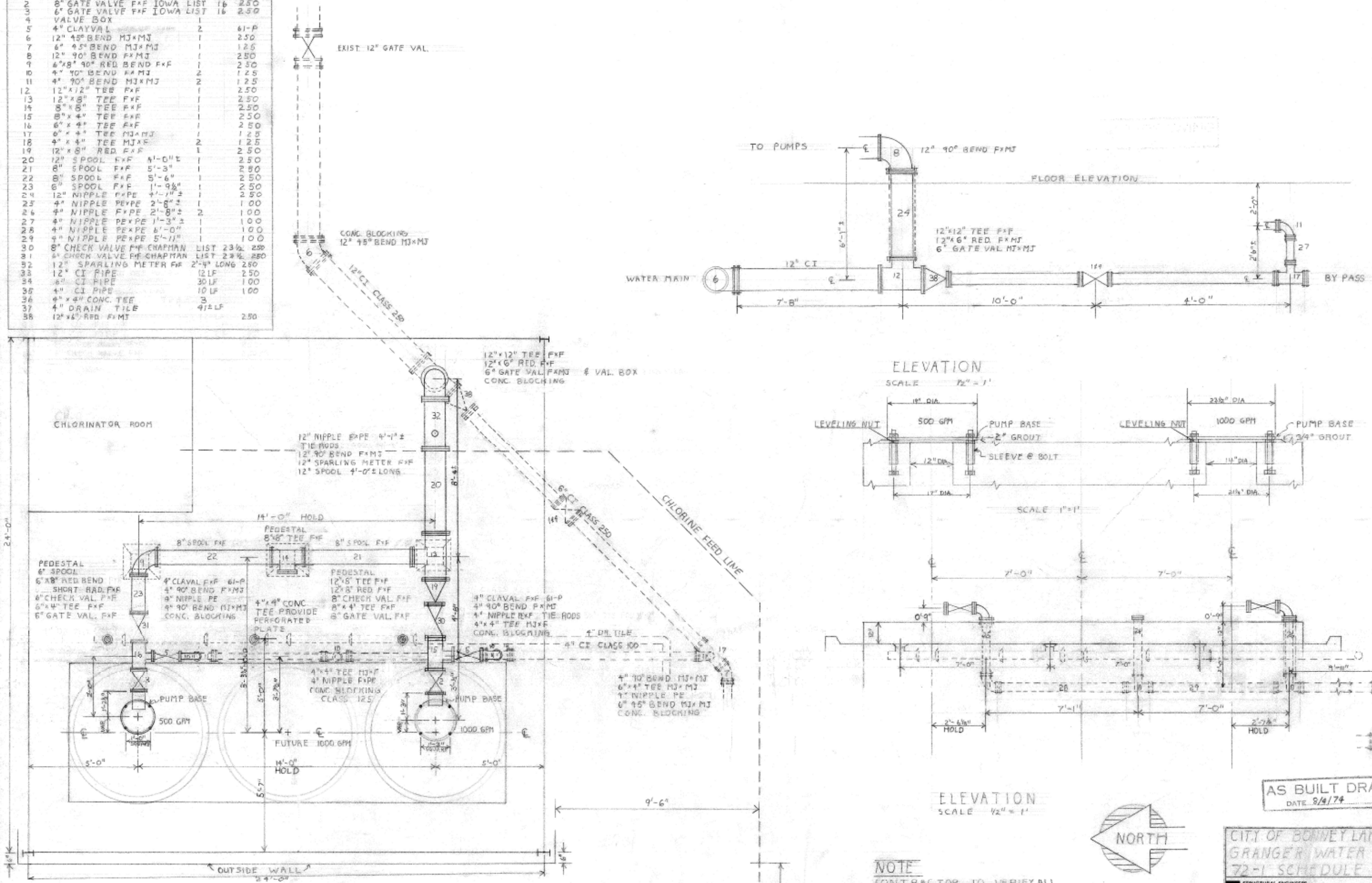

PLAN VIEW - PUMPING DIAGRAM
SCALE ½" = 1'

NOTE
CONTRACTOR TO VERIFY ALL DIMENSIONS IN THE FIELD

AS BUILT DRAWING
DATE 8/4/74

CITY OF BONNEY LAKE, WASH.
GRANGER WATER SOURCE
72-1 SCHEDULE "B"

STRUCTURAL ENGINEERS
PHILIP M. BOTCH & ASSOCIATES, INC.
831 AIRPORT WAY S. SEATTLE, WASHINGTON 98134

DRAWN DKW CHECKED DATE 11-17-72 DRWG. NO. 3-A/3

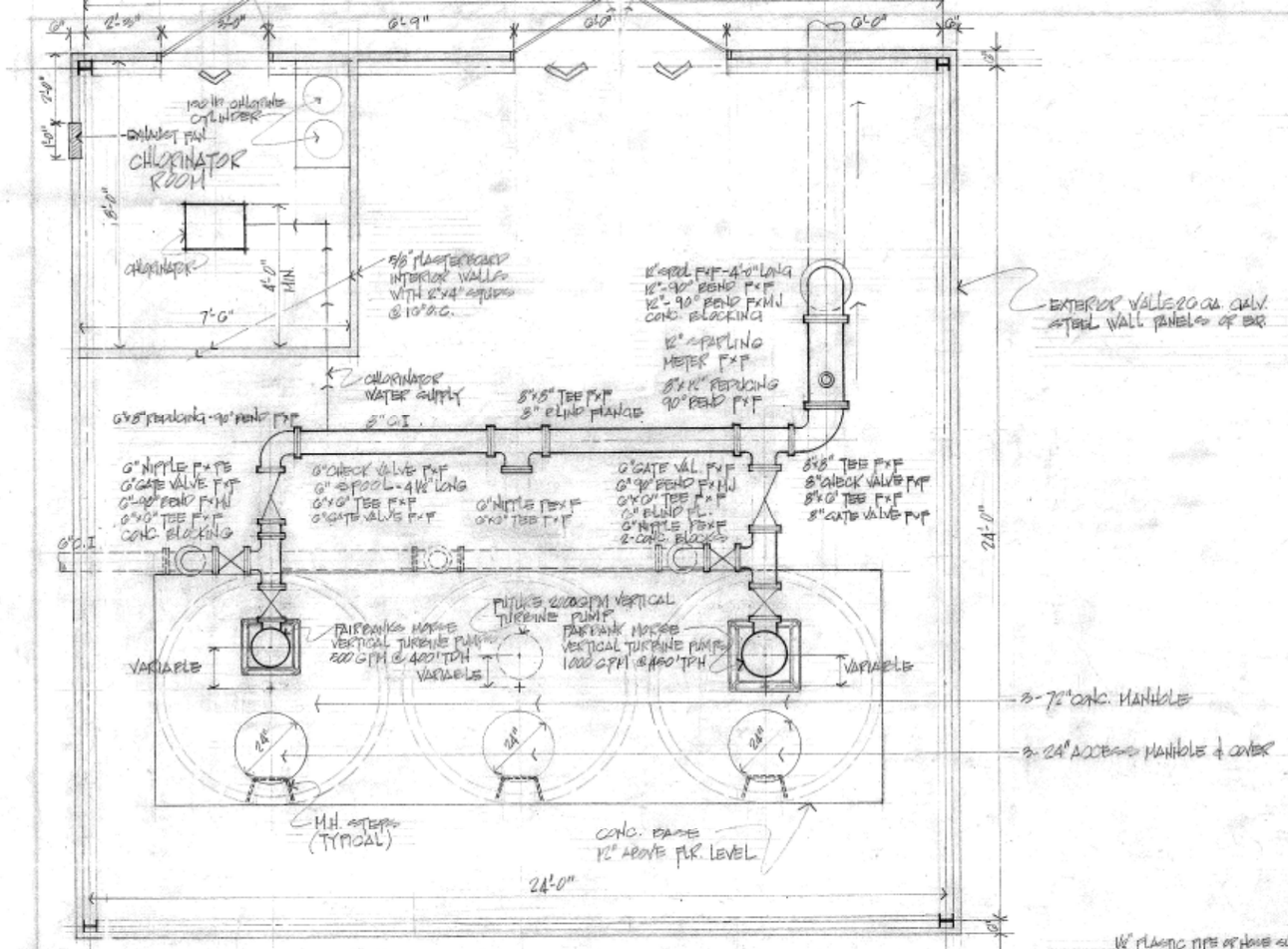

PLAN VIEW - PUMPING DIAGRAM

SCALE 1/2"=1'-0"

REVISED SEE SHEET 3-A

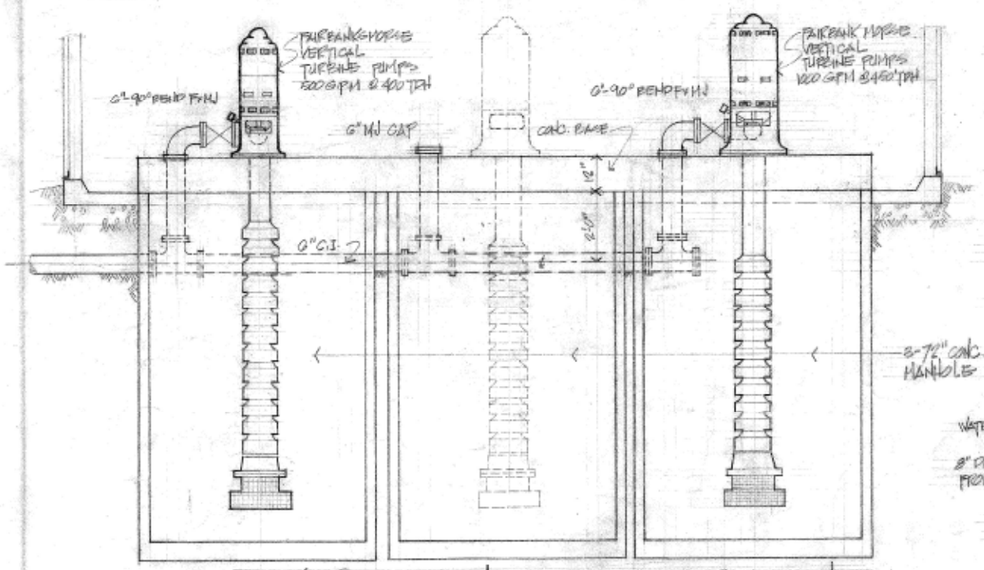

TYPICAL SECTION

SCALE 1/2"=1'-0"

LEGEND:

- CHAIN HUNG FLUORESCENT FIXTURE 2-40 WATT LAMPS - RAY BRITE #R41141
- WALL MOUNT FLOODLIGHTS 2-150 PAR 38 LAMPS - CROUSE #40154-L
- SINGLE POLE SWITCH
- RECEPTACLE
- HUBBL OUTLET
- POWER OUTLET, AS NOTED
- CONDUIT AT CEILING
- CONDUIT BELOW FLOOR

NOTES:

1. DO ALL SOLENOID VALVE WIRING AS RECOMMENDED BY VALVE MFGR. COMPLETE WITH H.O.A. AND CONTROL SWITCHES AND INTERMEDIATE RELAYS (2 PER PUMP) TO CONTROL PUMP STARTER.
2. WIRING AND CONNECTIONS FOR AUTOMATIC CONTROL OF PUMPS IS SPECIFIED IN SPECIFICATION SECTION DIVISION M - PUMPS, MOTORS & MISC. SPECIALTIES FOR CONTROLS BY SERVICE CONTROLS CO., PORTLAND.

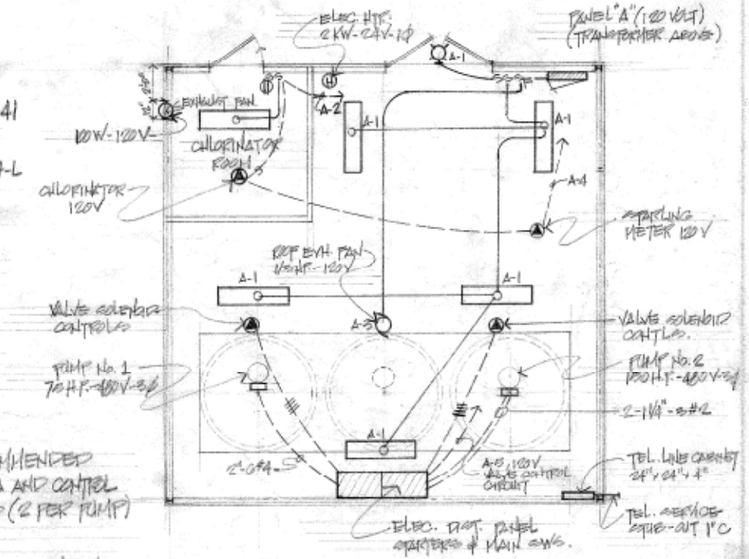

ELECTRICAL PLAN

SCALE 1/4"=1'-0"

PANEL SCHEDULE

PANEL	LOCATION		CIRCUITS	WIRE	SERVING
A		1	30A-2P	10	MAIN
		6	20A-1P	12	120V. CCTS.
		1	20A-2P	12	HEATER
DISTN. & CONTROL CTR.	MAINS	2	30A-2P	12	PANEL A & SPACE
		1	20A-3P	SEE DWG	PUMP No. 1
		1	40A-3P	SEE DWG	PUMP No. 2
	STARTERS	1	3PW		PUMP No. 1
		1	4PW		PUMP No. 2

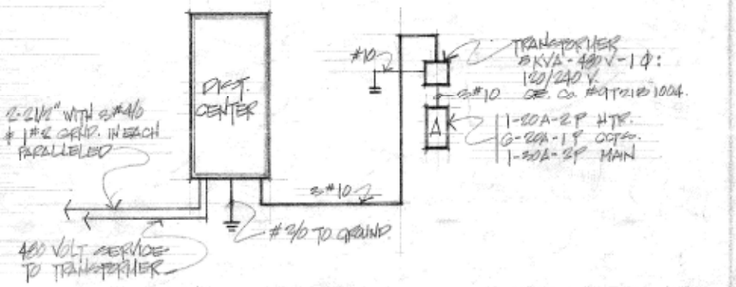

POWER RISER DIAGRAM

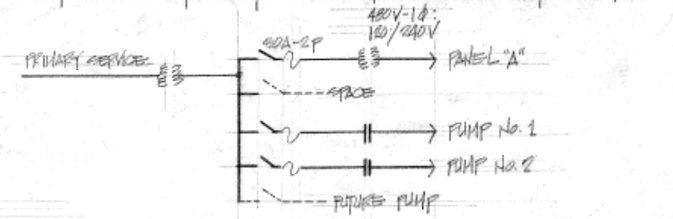

SCHEMATIC DISTRIBUTOR DIAGRAM

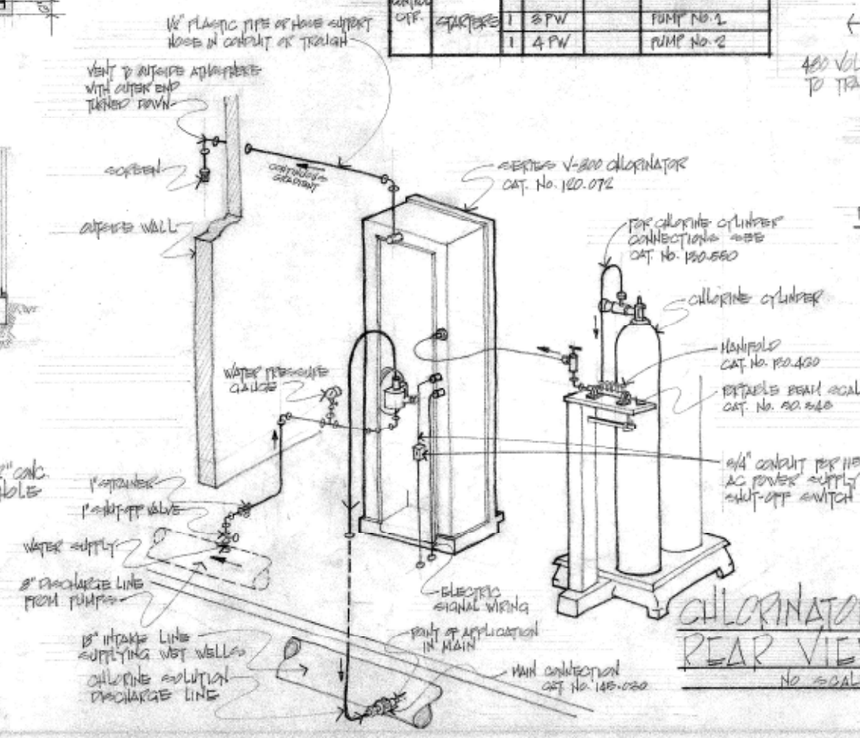

CHLORINATOR REAR VIEW

NO SCALE

AS BUILT DRAWING
DATE 8/4/74

HUD PROJECT No. WS-WASH-137

CITY OF BONNEY LAKE, WASH.
GRANGER WATER SOURCE 72-1
ARRANGEMENT DETAILS SCHEDULE "B"

CONSULTING ENGINEERS
PHILIP M. BOTCH & ASSOCIATES, INC.
831 AIRPORT WAY S. SEATTLE, WASHINGTON 98134

DRAWN FM CHECKED DATE 6/23/71 DWG. NO. 3/3

APPENDIX C
EXISTING PUMP

Performance Curve

Product Name: VIT - Short Set Lineshaft Turbine Pumps
Product Id: VIT
Quote Number 9001-210714-045

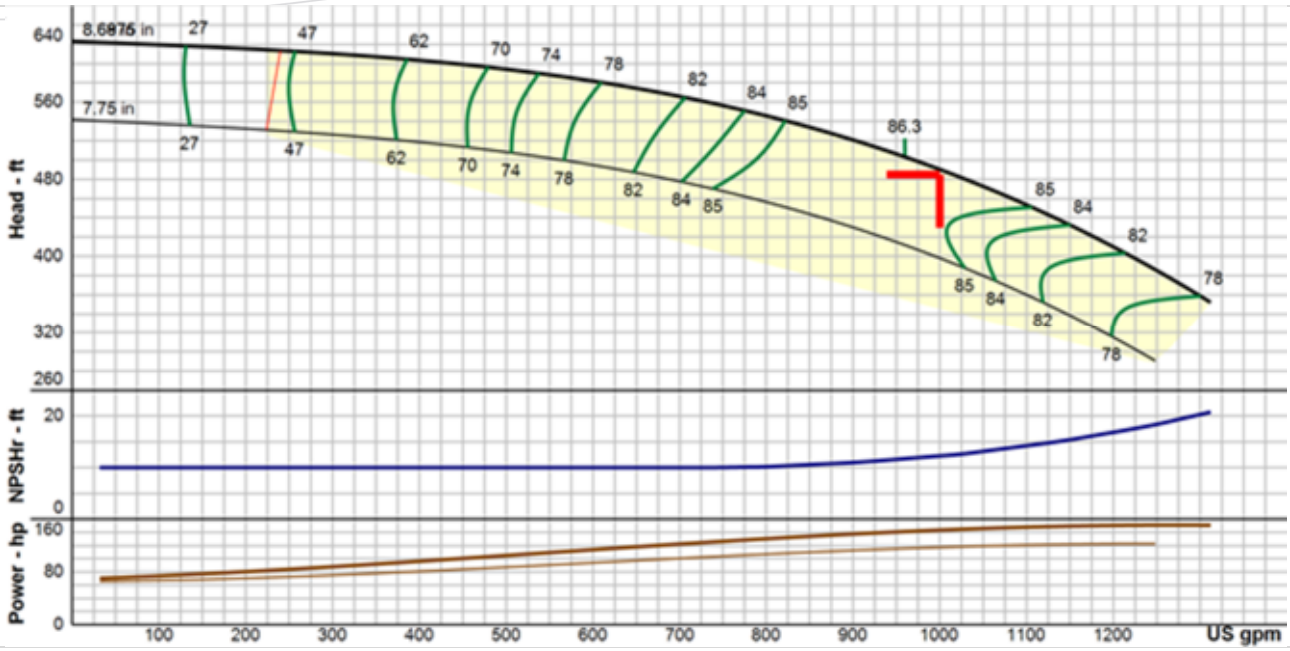

Curve & hydraulic data presented is nominal performance based on ANSI/HI 14.6 acceptance grade 1B. Design values are guaranteed within the following tolerances: Flow ± 5%, Head ± 3%, and optionally either Power + 4% or Efficiency - 3% at manufacturer's discretion.

Series	VIT	Max Power on Design Curve	151.00 Hp
Size	12CMC	Flow at BEP	960 USgpm
Additional Size	-	Head at BEP	503 ft
Speed	1,770 RPM	NPSH Required	12.3 ft
Number of Stages	7	Specified NPSH Avail.	33.17 ft
Frequency	60 Hz	Specified NPSH Avail. Margin	1.1
Impeller Trim	8.6875 in	Min Flow	240 USgpm
Additional Impeller	-	Shut Off Head	623 ft
Specified Flow	1,000 USgpm	Shut Off Power	68.6 Hp
Specified Head	485 ft	Shut Off Disc Pressure	270 psi
Flow at Design	1,000 USgpm	Fluid Type	Water
Head at Design	490 ft	Water Temperature	68 °F
Run Out Flow	1,312 USgpm	Allowable Sphere Size	0.94 in
Run Out Head	352 ft	Exact Bowl Diameter	11.75 in
Run Out Power	151 Hp	Thrust K Factor	7.5 lb/ft
Run Out Efficiency	77.3 %	Add Thrust K Factor	7.5 lb/ft
Run Out NPSHr	20.8 ft	Max Lateral	1.001 in
Efficiency at Design	86.20 %	Total Flow Derate Factor	1
Guaranteed Efficiency at Design	83.61 %	Total Head Derate Factor	1
Best Efficiency	86.3 %	Total Efficiency Derate Factor	1
Driver Size	200 Hp	Total NPSHr Derate Factor	1
Power at Design	143 Hp	Acceptance Grade	1B
Guaranteed Power	148.72 Hp		
Flow on Design Trim @ Max Power	1,280 USgpm		
Service Factor	No		

GOULDS WATER TECHNOLOGY
a xylem brand

ENGINEERING DATA
D200A01 R5

Lineshaft Turbine Bowl Assembly Data

200.A.01 *(Effective June, 2017)*

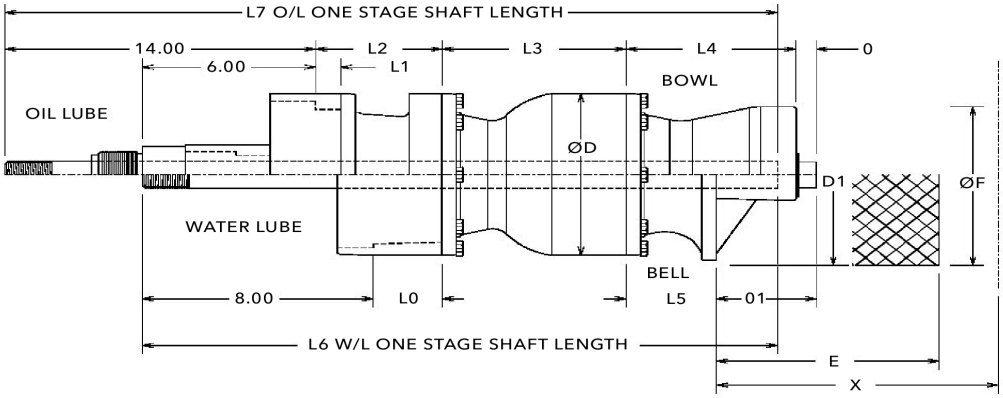

Model and Size	Bowl Assembly Length										Basket Strainer (Optional)		Floor Clear-ance	Bowl O.D.	Bell O.D.	Bowl Shaft Dia.	Available Lineshaft Size	Col. Pipe Size	Suct. Pipe Size	1st Stage Bowl Assembly Wt.		Add'l Stage Wt.
	L0	L1	L2	L3	L4	L5	L6	L7	O	O1	E	F	X	D	D1					W/L	O/L	
5A	2.06	N/A	4.75	3.625	5.00	3.00	17.75	26.44	0.69	2.69	4.88	6.75	4.63	5.20	5.63	1.00	1.00	3	4	38	45	11
5C	2.06	N/A	4.75	4.63	5.00	3.00	18.50	27.38	0.63	2.62	4.75	6.70	2.75	5.20	5.63	1.00	1.00	3,4	4	42	50	13
5T	2.06	N/A	4.75	4.81	5.00	3.81	18.63	27.56	0.63	2.31	4.62	6.70	2.75	5.20	5.63	1.00	1.00	3,4	4	43	51	13
5RWA	2.06	N/A	4.75	4.00	5.00	3.00	17.88	26.81	0.63	2.63	4.62	6.70	4.63	5.20	5.63	1.00	1.00	3,4	4	40	48	13
6C	2.50	N/A	4.75	5.13	5.00	3.94	19.88	28.13	0.63	1.69	4.62	6.70	3.75	5.88	5.63	1.00	1.00	3,4	4	47	55	17
6DH	2.06	N/A	5.75	5.50	5.38	5.38	21.06	30.13	1.75	1.75	4.62	6.70	4.88	5.50	5.50	1.00	1.00	4,5	4	48	57	16
6RA	2.06	N/A	4.75	3.75	5.00	3.00	19.19	27.88	0.63	4.00	5.13	6.70	6.00	5.50	5.63	1.00	1.00	3,4	4	42	52	20
7C	2.38	0.88	4.38	6.38	5.88	3.13	22.00	30.00	1.00	3.75	5.30	7.50	5.75	7.13	7.50	1.19	1.00-1.19	4,5,6	5	50	72	28
7RA	2.38	1.19	4.38	4.50	N/A	3.75	20.38	28.38	N/A	3.38	4.62	6.70	5.38	7.50	5.63	1.00	1.00	3,4	N/A	51	69	28
7T	2.38	0.88	4.38	7.09	5.88	3.13	22.81	30.81	1.00	3.75	5.30	7.50	5.75	7.13	7.50	1.19	1.00-1.19	5,6	5	53	71	31
7WA	2.38	0.88	4.38	5.50	6.13	3.25	21.25	29.25	1.00	3.75	5.63	7.63	5.75	7.13	6.38	1.19	1.00-1.19	4,5,6	4	54	76	30
8FD	2.38	0.88	4.38	8.25	6.00	6.00	25.50	33.50	2.88	2.88	8.25	8.38	5.25	7.50	7.31	1.19	1.00-1.19	5,6	6	80	95	34
8RA	2.38	0.88	4.38	5.00	N/A	3.19	20.63	28.63	N/A	3.69	5.63	7.63	5.75	7.50	6.38	1.19	1.00-1.19	4,5,6	N/A	67	82	36
8RJ	2.38	0.88	4.38	6.50	6.25	3.50	22.53	30.53	1.00	3.75	5.30	7.50	6.50	7.50	7.50	1.19	1.00-1.19	4,5,6	5	77	92	34
9RC	3.00	1.25	5.25	8.50	9.25	5.00	28.00	36.25	0.88	5.13	6.70	10.63	7.13	9.25	9.50	1.50	1.00-1.50	5,6,8	6	144	182	64
9T	3.00	1.25	5.25	9.25	9.25	5.00	28.75	37.00	0.88	5.13	6.70	10.63	7.13	9.25	9.50	1.50	1.00-1.50	5,6,8	6	150	188	70
9WA	3.00	1.25	5.25	6.63	9.25	5.00	26.13	34.38	0.88	5.13	6.70	10.63	7.13	9.25	9.50	1.50	1.00-1.50	4,5,6,8	6	138	176	58
10DH	2.94	1.25	5.19	9.25	8.38	5.75	30.63	38.88	4.44	7.06	14.25	13.75	9.13	9.50	12.75	1.69	1.00-1.69	6,8	8	140	170	64
10L	2.94	1.25	7.63	8.75	9.38	9.38	30.81	41.50	4.00	4.00	6.76	10.63	6.50	9.50	9.50	1.69	1.00-1.69	8,10	8,10	195	225	64
10RA	2.94	1.25	5.19	6.63	9.25	3.94	25.06	33.31	0.81	5.69	7.25	8.50	7.88	9.50	7.50	1.50	1.00-1.50	4,5,6,8	6	141	176	76
10RJ	2.94	1.25	5.19	8.40	9.69	5.88	28.13	36.44	0.94	4.75	6.70	10.63	7.88	9.50	9.50	1.50	1.00-1.50	5,6,8	6	130	165	60
10WA	3.00	1.25	5.25	7.63	9.19	5.06	27.13	35.38	1.00	5.13	6.70	10.63	7.25	9.50	9.50	1.50	1.00-1.50	4,5,6,8	6	126	160	56
11C	3.37	1.00	5.75	9.88	10.13	5.63	30.25	38.5	0.88	5.38	6.38	12.13	8.00	11.00	11.50	1.69	1.00-1.69	6,8,10	8,10	240	265	97
11RA	4.13	2.13	5.75	8.00	9.75	4.63	28.63	36.25	1.13	6.00	7.38	10.63	7.75	11.60	9.38	1.69	1.00-1.69	6,8,10	6	216	231	103
11WA	3.37	1.00	5.75	8.75	10.13	5.63	29.38	37.63	0.88	5.38	6.38	12.13	9.50	11.00	11.50	1.69	1.00-1.69	5,6,8	8	229	254	90
12C	4.13	2.13	5.75	11.00	10.38	6.88	32.63	40.25	0.88	4.38	6.38	12.13	8.00	11.75	11.50	1.69	1.00-1.69	6,8,10	8,10	263	295	124
12FD	4.13	2.13	5.75	12.25	9.50	8.00	34.25	41.88	2.50	4.00	6.50	12.50	6.43	11.60	11.50	1.94	1.00-1.94	8,10	8,10	275	300	129
12FR	4.13	N/A	8.25	12.50	9.13	8.00	33.75	43.88	2.88	4.00	6.38	12.13	6.13	11.75	11.50	1.94	1.00-1.94	10	10	255	320	129
12WA	4.13	2.13	5.75	9.00	9.75	6.88	29.88	37.5	1.00	3.88	6.38	12.13	8.00	11.60	11.50	1.69	1.00-1.69	6,8,10	6,8	240	265	95
12RJ	4.13	2.13	5.75	9.60	10.38	6.88	30.81	38.5	0.88	4.38	6.38	12.13	8.00	11.60	11.50	1.69	1.00-1.69	6,8,10	8,10	250	275	95
13C	4.13	N/A	5.75	11.13	10.13	5.56	32.00	39.63	1.00	5.56	6.38	12.13	8.00	12.38	11.50	1.94	1.00-1.94	8,10	10	315	380	150
13RA	3.13	3.00	9.00	9.50	N/A	7.00	31.38	43.25	N/A	5.50	7.75	15.50	7.75	13.38	12.75	1.94	1.00-1.94	8,10	N/A	374	459	164
14DH	3.13	3.00	9.00	13.25	10.75	10.75	37.00	49.88	5.88	5.88	12.88	14.50	8.00	13.25	13.20	2.19	1.19-2.19	10,12	10,12	405	490	169
14F	6.50	N/A	13.50	13.63	10.88	8.00	40.25	53.25	3.75	6.63	14.50	15.38	8.75	14.00	14.50	2.19	1.19-2.19	10,12	10,12	493	568	195
14RH	6.50	N/A	13.50	13.63	10.88	8.00	40.25	53.25	3.75	6.63	14.50	15.38	11.25	14.00	14.50	2.19	1.19-2.19	10,12	10,12	493	568	195

All dimensions are in inches and weights in lbs.

Lineshaft Turbine Bowl Assembly Data

200.A.01A *(Effective June, 2017)*

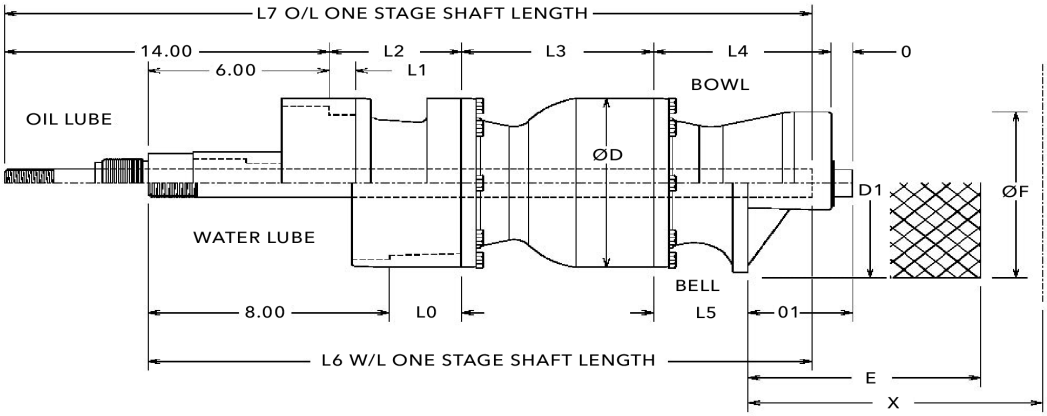

Model and Size	Bowl Assembly Length										Basket Strainer (Optional)		Floor Clear-ance	Bowl O.D.	Bell O.D.	Bowl Shaft Dia.	Available Lineshaft Size	Col. Pipe Size	Suct. Pipe Size	1st Stage Bowl Assembly Wt.		Add'l Stage Wt.
	L0	L1	L2	L3	L4	L5	L6	L7	O	O1	E	F	X	D	D1					W/L	O/L	
14RJ	3.13	3.00	9.00	11.50	10.38	6.25	31.75	43.63	1.13	5.25	9.75	14.00	9.50	13.63	13.25	1.94	1.00-1.94	8,10,12	10	390	475	155
15F Bell	5.75	N/A	13.00	16.00	N/A	8.00	38.50	51.75	N/A	4.75	12.25	17.50	8.00	14.75	16.00	2.19	1.19-2.19	12,14	N/A	535	620	222
15F Bowl	5.75	N/A	13.00	16.00	12.63	N/A	45.25	58.50	5.38	N/A	N/A	N/A	8.62	N/A	14.75	2.19	1.19-2.19	12,14	12,14	535	620	222
16B	10.25	N/A	10.00	14.00	N/A	10.25	44.12	49.88	N/A	4.75	17.00	19.00	8.25	16.13	16.00	2.44	1.19-2.44	10,12	N/A	465	680	300
16DH Bell	4.25	N/A	12.75	15.25	N/A	8.00	37.50	52.00	N/A	4.75	12.25	17.50	9.75	15.25	16.00	2.44	1.19-2.44	12,14	N/A	660	764	281
16DH Bowl	4.25	N/A	12.75	15.25	12.63	8.00	42.75	56.75	5.38	4.75	N/A	N/A	10.38	15.25	15.20	2.44	1.19-2.44	12,14	12,14	660	764	281
16DM	10.25	N/A	9.88	15.25	12.75	10.75	46.25	51.88	2.50	4.50	16.25	17.00	9.25	16.00	16.00	2.44	1.19-2.44	12,14	12,14	740	760	265
16RG	10.25	N/A	9.88	16.38	15.50	8.00	47.63	53.25	1.13	8.63	17.00	18.50	11.75	16.00	17.50	2.44	1.19-2.44	12,14	12,14	450	RF	310
18B	5.50	N/A	11.25	13.00	13.63	8.50	36.13	51.75	2.50	3.63	17.00	18.75	15.25	17.50	17.50	2.44	1.19-2.44	12,14,16	12,14	514	742	354
18C	5.50	N/A	11.25	16.38	13.63	10.69	37.25	54.50	2.50	5.56	17.00	18.00	9.63	17.50	16.88	2.44	1.68-2.43	10,12,14,16	12,14	450	680	310
18D	5.50	N/A	9.88	16.75	13.63	11.88	43.63	54.00	2.50	4.25	17.00	18.75	10.50	17.75	17.75	2.69	1.19-2.69	12,14,16	12,14	661	905	482
18GX	NA	N/A	9.88	18.75	N/A	10.88	38.00	62.00	N/A	3.12	18.75	19.75	9.38	18.50	18.88	2.44	1.68-2.44	12,14,16	N/A	RF	RF	N/A
18H	5.50	N/A	9.88	17.63	12.88	8.88	39.13	55.00	4.13	7.88	17.00	19.50	18.25	18.00	18.00	2.69	1.19-2.69	12,14,16	14,16	648	886	371
18L	N/A	N/A	9.88	18.63	N/A	12.75	39.00	54.88	N/A	2.63	16.13	24.50	11.75	18.00	23.50	2.44	1.19-2.44	12,14,16	N/A	616	1020	456
20B	N/A	N/A	N/A	16.31	N/A	12.13	37.56	56.69	N/A	3.13	26.25	21.00	10.50	19.75	19.75	2.44	1.19-2.44	10,12	N/A	730	N/A	395
20RC	N/A	N/A	9.88	19.13	N/A	12.56	41.62	57.5	N/A	5.22	20.00	21.00	11.00	21.13	21.00	2.44	1.68-2.43	12,14,16,18	N/A	720	1000	500
20E	5.50	N/A	9.88	18.00	12.88	12.50	39.00	54.88	4.13	3.50	21.00	23.25	12.75	18.94	22.00	2.44	1.19-2.44	12,14,16	14,16	600	896	392
20G	N/A	N/A	15.00	21.50	N/A	12.50	42.25	63.25	N/A	3.13	21.00	23.25	12.75	20.75	22.00	2.44	1.19-2.44	16,18	N/A	714	1150	519
24C	N/A	N/A	15.00	23.25	N/A	15.38	50.25	71.25	N/A	6.38	24.00	25.50	12.38	25.00	24.38	2.44	1.68-2.43	16,18,20	N/A	1300	1800	900
24D	N/A	N/A	13.50	22.75	N/A	16.25	48.00	67.50	N/A	5.75	27.25	26.00	12.88	24.25	24.88	2.44	1.68-2.43	16,18,20	N/A	1570	2150	1090
24E	N/A	N/A	15.00	21.00	N/A	14.56	44.00	54.50	N/A	4.19	26.00	26.75	13.00	22.25	25.63	2.44	1.68-2.43	16,18,20	N/A	1320	RF	880
24F	N/A	N/A	13.50	24.00	N/A	14.68	52.50	82.50	N/A	8.44	24.00	25.50	13.38	24.25	24.38	2.44	1.68-2.43	16,18,20	N/A	1120	RF	780
24G	N/A	N/A	13.50	24.75	N/A	14.43	48.00	67.50	N/A	3.31	24.75	26.00	15.38	24.25	24.88	2.94	1.68-2.93	16,18,20	N/A	1110	1800	770
26G	N/A	N/A	18.00	26.88	N/A	15.56	50.75	74.75	N/A	3.81	26.00	28.50	13.75	26.00	27.38	2.94	1.68-2.93	16,18,20,24	N/A	RF	RF	RF
28B	N/A	N/A	12.00	22.00	N/A	12.94	42.88	60.88	N/A	3.81	27.75	29.50	18.00	26.88	28.38	2.68	1.68-2.68	16,18,20	N/A	1500	2030	1050
28G	N/A	N/A	12.00	27.88	N/A	16.19	52.75	60	N/A	3.94	27.63	29.50	14.25	26.88	28.38	2.94	1.68-2.93	18,20,24	N/A	1700	RF	750
30B	N/A	N/A	12.00	24.00	N/A	14.94	42.88	60.88	N/A	5.56	32.12	34.00	18.25	29.50	32.88	2.94	1.68-2.93	18,20,24	N/A	1820	2400	1330

All dimensions are in inches and weights in lbs.

Xylem Inc.

www.gouldswatertechnology.com

GOULDS WATER TECHNOLOGY

a xylem brand

Goulds is a registered trademark of Goulds Pumps, Inc. and is used under license.

© 2017 Xylem Inc. D200A01 R5 June 2017